SYSTEM GENERAL CATALOGUE

SCAME
electrical solutions

2016-2018

SCAME
electrical solutions

GENERAL CATALOGUE 2016-2018

www.scame.com

Index

INDEX

CONSULTATION CRITERIA

THE COMPANY

PRODUCTS CATALOGUE

TECHNICAL SHEETS

INDEX BY PRODUCT NUMBER

DEFINITION OF SYMBOLS

THE SCAME PRODUCT RANGE

INDUSTRY

1 PAG. 18

1.1 Plugs and inlets for industrial applications PAG. 20

1.2 Connectors and sockets for industrial applications PAG. 44

1.3 Switched interlocked sockets outlets PAG. 96

1.4 Plugs and sockets for special applications PAG. 148

1.5 Switchgears PAG. 218

1.6 Empty enclosures PAG. 274

1.7 Light-fittings PAG. 362

ASSEMBLIES

2 PAG. 372

2.1 Distribution assemblies PAG. 374

2.2 Industrial adaptors PAG. 424

2.3 Industrial cable reels PAG. 440

ACCESSORIES

3 PAG. 460

3.1 Installation accessories PAG. 462

3.2 Connecting accessories PAG. 484

3.3 Conduit PAG. 498

3.4 Trunking systems PAG. 508

DOMESTIC

4 PAG. 536

4.1 Plugs and sockets PAG. 538

4.2 Adaptors PAG. 544

4.3 Multi sockets PAG. 554

4.4 Cable reels PAG. 572

4.5 Lampholders and switches PAG. 578

4.6 TV/SAT - TEL - DATA PAG. 590

4.7 Wiring accessories PAG. 604

Industry

Plugs and inlets for industrial applications

Plugs - IP44/IP54 PAG. 22

Plugs - IP66/IP67/IP69 PAG. 28

Flush mounting appliance inlets - IP44/IP54 PAG. 34

Flush mounting appliance inlets - IP66/IP67/IP69 PAG. 37

Surface mounting appliance inlets - IP44/IP54 PAG. 41

Surface mounting appliance inlets - IP66/IP67/IP69 PAG. 42

Accessories for plugs PAG. 43

Connectors and sockets for industrial applications

Connectors - IP44/IP54 PAG. 46

Connectors - IP66/IP67/IP69 PAG. 52

Flush mounting socket outlets - IP44/IP54 PAG. 59

Flush mounting socket outlets - IP66/IP67/IP69 PAG. 65

Surface mounting socket outlets - IP44/IP54 PAG. 72

Surface mounting socket outlets - IP66/IP67/IP69 PAG. 80

Surface mounting switched socket outlets without interlock - IP44/IP54 PAG. 86

Surface mounting switched socket outlets without interlock - IP66/IP67/IP69 PAG. 89

Domestic standard socket for industrial applications - IP54 PAG. 90

BS socket for industrial applications - IP66 PAG. 93

Accessories for sockets PAG. 94

Switched interlocked sockets outlets

OMNIA Series
Interlocked-switch socket outlets for industrial applications
PAG. 98

OMNIAPLUS Series
Domestic interlocked socket
PAG. 108

OMNIA System
Flush and surface mounting modular system
PAG. 110

ADVANCE2 Series
Interlocked-switch socket outlets for industrial applications
PAG. 118

ADVANCE2 System
Modular system for combination units - IP66
PAG. 128

ADVANCE-GRP Series
Interlocked-switch socket outlets for industrial applications
PAG. 133

ADVANCE-GRP System
Modular system - IP66
PAG. 143

Plugs and sockets for special applications

AMR System - Automated Meter Reading PAG. 150

Plugs and sockets for industrial applications <50V~ PAG. 156

Events and exhibitions products PAG. 162

Industrial plugs and sockets for military use PAG. 178

Plugs and sockets UL/CSA PAG. 184

Seven poles plugs and sockets PAG. 200

OPTIMA-METAL Series - Industrial connectors PAG. 202

Switchgears

COMMAND Series
Low-voltage rotary switchgear and controlgear
PAG. 220

ISOLATORS Series
Switch-disconnectors IP65
PAG. 237

TOP22 Series
Control and signalling accessories
PAG. 265

Empty enclosures

DOMINO IP66 Series
Consumer units and enclosures
PAG. 276

DOMINO IP40 Series
Consumer units
PAG. 289

DOMINO System
Distribution assemblies - IP66
PAG. 292

FLAT Series
Enclosures
PAG. 306

BLOCK Series
Distribution assemblies - IP66
PAG. 308

ENERBOX Series
Distribution assemblies - IP55
PAG. 315

ADAPTO Series
Adaptors for industrial applications
PAG. 317

MBOX Series
Distribution assemblies for construction site
PAG. 320

EASYBOX Series
Weather-proof enclosures - IP65
PAG. 329

KIOSK Series
Distribution pedestals terminals for campsites, public areas and marinas
PAG. 337

GOMMA Series
Rubber distribution assemblies
PAG. 341

EMERGENCY Series
Emergency switchboards
PAG. 345

SCABOX Series
Surface mounting junction boxes - Metal screws
PAG. 347

CUBIK Series
Surface mounting junction boxes - ¼ turn plastic screw cover
PAG. 351

CUBOX Series
Surface mounting junction boxes - ¼ turn plastic screw cover
PAG. 354

BEEBOX Series
Enclosures
PAG. 355

WBOX Series
Flush mounting boxes
PAG. 356

ALUBOX Series
Aluminium junction boxes
PAG. 360

Light-fittings

MIZAR Series
Light-fittings for fixed installations - 60W
PAG. 364

HYDRA Series
Light-fittings for fixed installations - 100W
PAG. 368

HALE Series
Portable lighting - 60W
PAG. 370

Assemblies

Distribution assemblies

MBOX Series
Distribution assemblies for construction site
PAG. 376

MEGA Series
Distribution assemblies for construction site
PAG. 382

DOMINO Series
Distribution assemblies
PAG. 384

BLOCK Series
Distribution assemblies
PAG. 388

KIOSK Series
Distribution pedestals terminals for campsites, public areas and marinas
PAG. 403

GOMMA Series
Rubber distribution assemblies
PAG. 408

LV-LUX Series
Distribution assemblies
PAG. 410

TRANSFORMER Series
ACS IP55 portable unit with safety and isolating transformer
PAG. 411

MOBIL Series
ACS IP55 distribution boxes with foldable stand
PAG. 414

SALVAMOTORE Series
Stop-start units and motor cut-out - IP55
PAG. 415

Accessories and spare parts
PAG. 417

Industrial adaptors

ADAPTO Series
Adaptors for industrial applications
PAG. 426

Industrial cable reels

AUTOROLLER Series
Cable reels with automatic rewind
PAG. 442

ROLLER 330 Series
Cable reels for industrial, commercial and domestic applications
PAG. 446

ROLLER-BLOCK 330 Series
Cable reels
PAG. 450

ROLLER 450 Series
Cable reels for industrial applications
PAG. 452

ROLLER-BLOCK 450 Series
Cable reels for industrial applications
PAG. 454

ROLLER Series
Spare parts
PAG. 456

Accessories

Installation accessories

UNION Series
Installation accessories
PAG. 464

TIES Series
Cable ties
PAG. 470

FIXO Series
Fastening accessories
PAG. 475

CABLO Series
INSTALLATION Accessories
PAG. 477

FASTY Series
Cable clips and insulated pins
PAG. 479

RAILDIN Series
Metallic DIN rails
PAG. 481

Connecting accessories

CONNECTO Series
Insulated wire connectors - T85
PAG. 486

CONNECTO Series
Terminal strips
PAG. 493

CONNECTO Series
DOMINO terminal blocks - T85
PAG. 495

Conduit

FIXER Series
Conduit FIXING accessories
PAG. 500

TUBE Series
COUPLING Accessories
PAG. 503

SMART Series
IP66/67
PAG. 507

Trunking systems

WADO Series - Mini-trunking PAG. 510

WADO Series - Skirting trunking PAG. 517

WADO Series - Cable and set housing trunking PAG. 525

WADO Series - Slotted cable trunking PAG. 530

WADO Series - Trunking for air conditioning systems PAG. 531

Domestic

Plugs and sockets

AZZURRA Series
Plugs and trailing sockets PAG. 540

BLUELINE Series
Plugs and trailing sockets PAG. 541

QUICK Series
Plugs and trailing sockets PAG. 542

UNEL Series
Plugs and sockets with side earth contact PAG. 543

Adaptors

AZZURRA Series
Adaptors PAG. 546

BLUELINE Series
Adaptors PAG. 548

Multi sockets

TREND Series
Multi sockets PAG. 556

BLUELINE Series
Multi sockets PAG. 560

SICURA Series
Multi sockets PAG. 567

Serie SPYROS
Extension cords for domestic applications PAG. 571

Cable reels

TRIS (ENERGY) Series
Cable reels - Low voltage versions with thermal switch PAG. 574

TRIS Series (TV)
Cable reels - TV versions PAG. 576

TRIS (TEL) Series
Cable reels - Telephone versions PAG. 577

Lampholders and switches

LUX [Lampholders] Series
Lampholders PAG. 580

LUX [switches] Series
Single pole switches PAG. 587

LUX [celing] Series
Ceiling accessories PAG. 589

TV/SAT - TEL - DATA

DATATEL-TEL Series
Components for telephone installations PAG. 592

DATATEL-DATA Series
Component for structured cabling PAG. 596

DATATEL-TV/SAT Series
Plugs, sockets and accessories for tv installations PAG. 599

Wiring accessories

PROTECTA Series
IP66 weatherproof switches & sockets PAG. 606

UNIBOX Series [+EVOLUTION]
Enclosures for wiring accessories PAG. 618

EVOLUTION Series
Plates and devices PAG. 626

Consultation criteria

1 Next to the item code, the quantity of pieces in each product package/packing unit is shown.

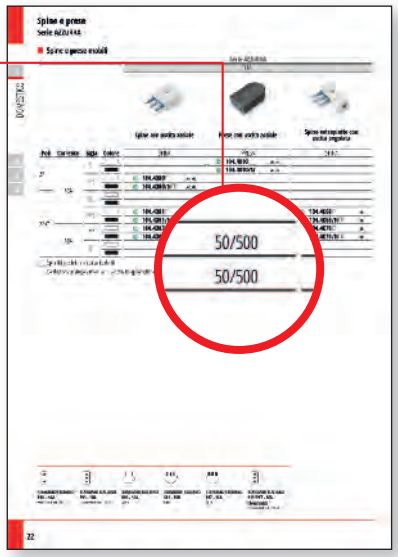

2 The assembled panels illustrated in this paper catalogue are only part of a wider range of available products; other combinations can be found on the Company website (www.scame.com) by means of the the dedicated app “CombiFINDER”. In case of specific needs, you can contact our Technical Information Centre (CIT) directly.

3 The second part of the catalogue contains, in alphabetical order by “Series” name, the TECHNICAL DATA SHEETS of the products illustrated in the catalogue.

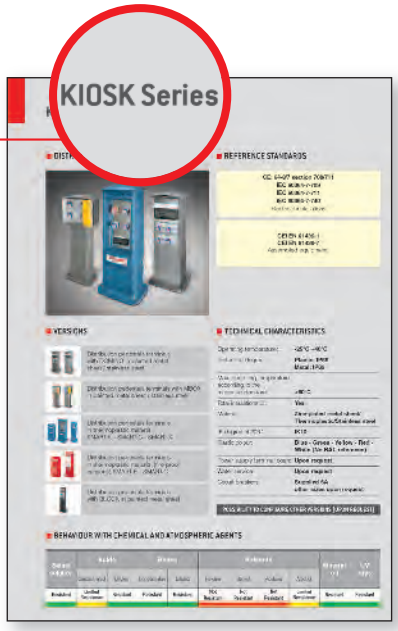

4 This “SYSTEMS” catalogue should be completed with the“ECOMOBILITY”, "WIRING ACCESSORIES" and “ATEX” catalogues.

Scame: a tradition of innovation

IN FIFTY YEARS WE HAVE WRITTEN A STORY OF INNOVATION THAT HAS ALWAYS PRESERVED THE SPIRIT OF ITS ORIGINS.

Scame was founded amidst the enthusiasm of the Italian economic boom of the 60's and has always pursued its strive for excellence by continuous innovation. Today it is an international industrial group of about 800 people employed in 20 subsidiary and associated companies operating under the parent company headquartered in Parre (Bergamo) in Alta Valle Seriana. Scame has a capillary presence throughout Italy with its own sales agencies and operates worldwide with branches and loyal distributors.

Scame in the world

SCAME electrical solutions

Italy
Parre (Bergamo)

SCAME ARGENTINA
Argentina

SCAME BULGARIA
Bulgaria

SCAME BRASIL
Brazil

SCAME CHILE
Chile

SCAME-TOP
China

SCAME-HR
Croatia

SCAME-CZ
Czech Republic

SOBEM SCAME
France

SCAME INDIA
India

SCAME POLSKA
Poland

SCAME PORTUGAL
Portugal

SCAME-RO
Romania

SCAME-SK
Slovakia

SCAME IBERICA
Spain

SCAME MIDDLE EAST
U.A.E.

SCAME-UK
United Kingdom

SCAME-UY
Uruguay

SCAME-UA
Ukraine

The catalogue and the internet site

AN INDUSTRIAL SYSTEMS CATALOGUE DIVIDED INTO 4 SECTIONS WITH OVER 10,000 ITEMS. MONOTHEMATIC CATALOGUES DEDICATED TO EX PRODUCTS, ELECTRIC VEHICLES RECHARGIN SOLUTIONS AND WIRING ACCESSORIES. AN INTERNET SITE WITH VALUABLE INFORMATION AND UPDATES ON PRODUCT DEVELOPMENTS.

Red and white are our company colours and also the colours chosen for this catalogue: the simple elegance of white combined with vivid red, symbol of a dynamic and successful life. www.scame.com: a portal with the primary information, names and addresses of the entire distribution network, the products and their characteristics. Its internal search engines allow simple and flexible consultation of the information, providing real-time solutions to the many questions that arise during the distribution and use of electricity.

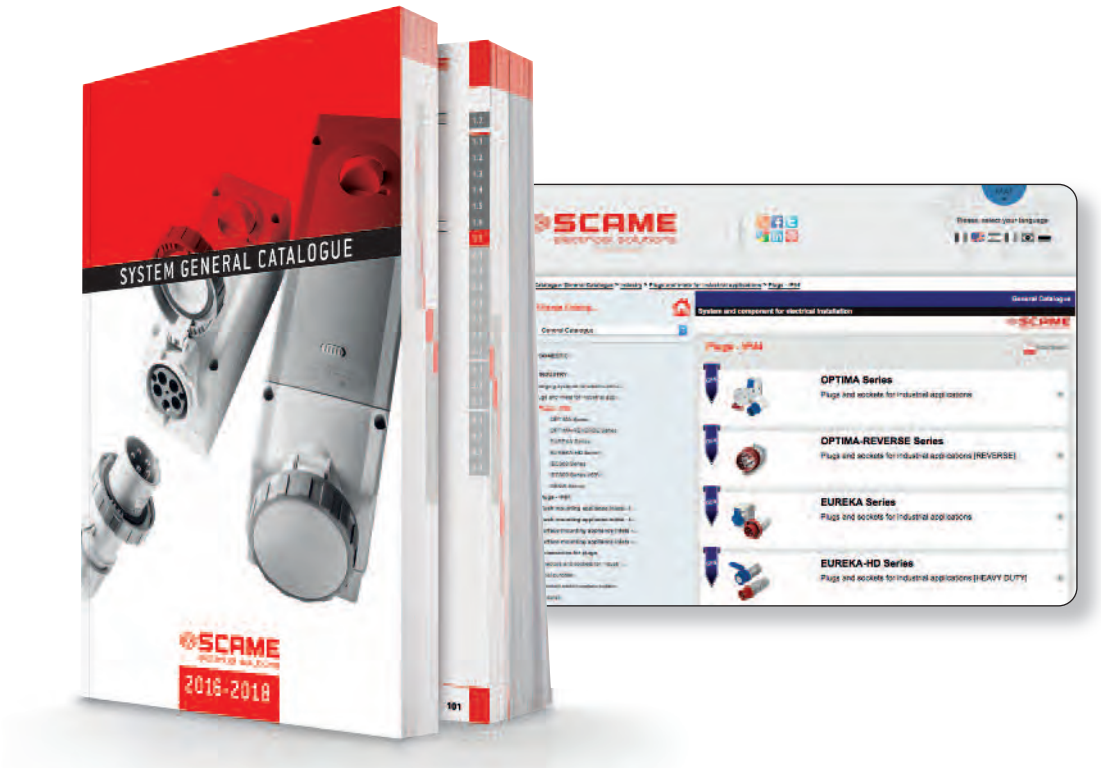

Quality

THE CONCEPT OF QUALITY IS AN INTEGRAL PART OF OUR CULTURE IN ALL ASPECTS AND EVERY ACTIVITY OF OUR WORK.

In 1993 Scame was among the first Italian companies to obtain the certification of its quality management system according to UNI EN ISO 9001 standards, renewed in 2002 according to Vision 2000. In 2003 Scame also obtained certification of its environmental management system according to UNI EN ISO 14001 standards which, by activating measures for improvement, continuous controls and appropriate corrective actions, fuels a virtuous circle of constant eco-friendly improvement.

In recognition of the health and safety of its work environment, in 2013 SCAME has been prized with BS OHSAS 18001 certification.

Technical and sales service

SEND AN E-MAIL TO infotech@scame.com AND YOU'LL RECEIVE THE ANSWERS TO ALL YOUR QUESTIONS ABOUT TECHNICAL ASPECTS, INSTALLATION PROCEDURES AND CONFORMITY WITH THE STANDARDS .

Scame technical information centre is able to promptly provide clear and complete answers to all your questions regarding the Scame products. The leading distributors of electrical material, with the support of our sales agencies and technical promoters, represent an additional capillary reference network. Information and updates can be found in the Info-point section of the internet site and in the newsletter sent periodically to the registered users.

infotech@scame.com

1

INDUSTRY

Systems and components for
electrical installations

1.1	Plugs and inlets for industrial applications	PAG. 20
1.2	Connectors and sockets for industrial applications	PAG. 44
1.3	Switched interlocked sockets outlets	PAG. 96
1.4	Plugs and sockets for special applications	PAG. 148
1.5	Switchgears	PAG. 218
1.6	Empty enclosures	PAG. 274
1.7	Light-fittings	PAG. 362

1.1

Plugs and inlets for industrial applications

- Plugs - IP44/IP54
- Plugs - IP66/IP67/IP69
- Flush mounting appliance inlets - IP44/IP54
- Flush mounting appliance inlets - IP66/IP67/IP69
- Surface mounting appliance inlets - IP44/IP54
- Surface mounting appliance inlets - IP66/IP67/IP69
- Accessories for plugs

Plugs and inlets for industrial applications

Plugs - IP44/IP54

OPTIMA Series >> Plugs

Screw terminals

Poles	Hz	Volt	Colour	h	OPTIMA Series 213. PLUG IP44/IP54 CABLE GLAND 16A		32A	
2P+E	50Hz 60Hz	100-130V		4h	**213.1630**	10/50	**213.3230**	10/40
		200-250V		6h	**213.1633**	10/50	**213.3233**	10/40
		380-415V		9h	**213.1638**	10/50	**213.3238**	10/40
		480-500V		7h	**213.16336**	10/50	**213.32336**	10/40
		TST>50V		12h	**213.16333**	10/50	**213.32333**	10/40
	>300-500Hz	>50V		2h	**213.16332**	10/50	**213.32332**	10/40
	DC	>50-250V		3h	**213.16334**	10/50	**213.32334**	10/40
		>250V		8h	**213.16338**	10/50	**213.32338**	10/40
3P+E	50Hz 60Hz	100-130V		4h	**213.1631**	10/50	**213.3231**	10/40
		200-250V		9h	**213.1634**	10/50	**213.3234**	10/40
		380-415V		6h	**213.1636**	10/50	**213.3236**	10/40
		380V 50Hz / 440V 60Hz		3h	**213.16364**	10/50	**213.32364**	10/40
		480-500V		7h	**213.16366**	10/50	**213.32366**	10/40
		600-690V		5h	**213.16367**	10/50	**213.32367**	10/40
	60Hz	440-460V		11h	**213.16365**	10/50	**213.32365**	10/40
	100-300Hz	>50V		10h	**213.16361**	10/50	**213.32361**	10/40
	>300-500Hz			2h	**213.16362**	10/50	**213.32362**	10/40
3P+N+E	50Hz 60Hz	100-130V		4h	**213.1632**	10/50	**213.3232**	10/40
		208-250V		9h	**213.1635**	10/50	**213.3235**	10/40
		346-415V		6h	**213.1637**	10/50	**213.3237**	10/40
		380V 50Hz / 440V 60Hz		3h	**213.16374**	10/50	**213.32374**	10/40
		480-500V		7h	**213.16376**	10/50	**213.32376**	10/40
		600-690V		5h	**213.16377**	10/50	**213.32377**	10/40
	60Hz	440-460V		11h	**213.16375**	10/50	**213.32375**	10/40
	>300-500Hz	>50V		2h	**213.16372**	10/50	**213.32372**	10/40

Terminals
Screw terminals

Terminals
Spring terminals (FAST WIRING)

Terminals
Perforating terminals (FAST WIRING)

OPTIMA Series >> Plugs

					OPTIMA Series
					213.
					Perforating terminals
					PLUG
					IP44/IP54
					CABLE GLAND
Poles	**Hz**	**Volt**	**Colour**	**h**	16A
2P+E	50Hz 60Hz	100-130V		4h	**213.1630P** 10/50
		200-250V		6h	**213.1633P** 10/50
3P+E		380-415V		9h	**213.1638P** 10/50
		200-250V			**213.1634P** 10/50
3P+N+E		380-415V		6h	**213.1636P** 10/50
		346-415V			**213.1637P** 10/50

					OPTIMA Series
					213.
					Spring terminals
					PLUG
					IP44/IP54
					CABLE GLAND
Poles	**Hz**	**Volt**	**Colour**	**h**	32A
2P+E	50Hz 60Hz	100-130V		4h	**213.3230F** 10/40
		200-250V		6h	**213.3233F** 10/40
3P+E		380-415V		9h	**213.3238F** 10/40
		200-250V			**213.3234F** 10/40
3P+N+E		380-415V		6h	**213.3236F** 10/40
		346-415V			**213.3237F** 10/40

Plugs and inlets for industrial applications

Plugs - IP44/IP54

OPTIMA Series >> Plugs

					OPTIMA Series
					213.
					Mantle terminals
					PLUG
					IP44/IP54
					CABLE GLAND
Poles	**Hz**	**Volt**	**Colour**	**h**	63A
2P+E	50Hz 60Hz	100-130V		4h	**213.6330** 6/24
		200-250V		6h	**213.6333** 6/24
		380-415V		9h	**213.6338** 6/24
		480-500V		7h	**213.63336** 6/24
		TST>50V		12h	**213.63333** 6/24
	>300-500Hz	>50V		2h	**213.63332** 6/24
	DC	>50-250V		3h	**213.63334** 6/24
		>250V		8h	**213.63338** 6/24
3P+E	50Hz 60Hz	100-130V		4h	**213.6331** 6/24
		200-250V		9h	**213.6334** 6/24
		380-415V		6h	**213.6336** 6/24
		380V 50Hz / 440V 60Hz		3h	**213.63364** 6/24
		480-500V		7h	**213.63366** 6/24
		600-690V		5h	**213.63367** 6/24
	60Hz	440-460V		11h	**213.63365** 6/24
	100-300Hz	>50V		10h	**213.63361** 6/24
	>300-500Hz			2h	**213.63362** 6/24
3P+N+E	50Hz 60Hz	100-130V		4h	**213.6332** 6/24
		208-250V		9h	**213.6335** 6/24
		346-415V		6h	**213.6337** 6/24
		380V 50Hz / 440V 60Hz		3h	**213.63374** 6/24
		480-500V		7h	**213.63376** 6/24
		600-690V		5h	**213.63377** 6/24
	60Hz	440-460V		11h	**213.63375** 6/24
	>300-500Hz	>50V		2h	**213.63372** 6/24

Terminals
Mantle terminals (EASY-PLUG)

Terminals
Perforating terminals (FAST WIRING)

Terminals
Screw terminals

OPTIMA Series >> Plugs [Transparent version]

					OPTIMA Series			
					213.			
					Screw terminals		Perforating terminals	
					PLUG			
					IP44/IP54			
					CABLE GLAND			
Poles	**Hz**	**Volt**	**Colour**	**h**	16A			
2P+E	50Hz 60Hz	100-130V		4h	**213.1630.TR**	10/50	**213.1630P.TR**	10/50
		200-250V			**213.1633.TR**	10/50	**213.1633P.TR**	10/50
3P+E		380-415V		6h			**213.1636P.TR**	10/50
3P+N+E		346-415V					**213.1637P.TR**	10/50

- Transparent grip

CONVENTIONAL WIRING
Screw terminals

FAST WIRING
Insulation perforating terminals

Plugs and inlets for industrial applications

Plugs - IP44/IP54

OPTIMA-REVERSE Series >> Plugs with phase inverter

					OPTIMA-REVERSE Series	
					213.	
					Screw terminals	
					PLUG	
					IP44/IP54	
					CABLE GLAND	
Poles	**Hz**	**Volt**	**Colour**	**h**	16A	32A
3P+E	50Hz 60Hz	380-415V		6h	**213.1636RV** 10/50	**213.3236RV** 10/40
3P+N+E		346-415V			**213.1637RV** 10/50	**213.3237RV** 10/40

- Phase inverter

OPTIMA-REVERSE Series
Operating principle of the phase inverter

Terminals
Screw terminals

EUREKA Series >> Plugs

EUREKA Series

221.

Screw terminals [Angled outlet]

PLUG
IP44
CABLE SLEEVE

Poles	Hz	Volt	Colour	h	16A		32A	
2P+E	50Hz 60Hz	100-130V		4h	**221.1630**	10/100	**221.3230**	10/60
		200-250V		6h	**221.1633**	10/100	**221.3233**	10/60
3P+E		380-415V			**221.1636**	10/100	**221.3236**	10/60
3P+N+E		346-415V			**221.1637**	10/100	**221.3237**	10/50

XENIA Series >> Plugs

XENIA Series

214.

Screw terminals

PLUG
IP44
CABLE GLAND

Poles	Hz	Volt	Colour	h	16A		32A	
2P+E	50Hz 60Hz	100-130V		4h	**214.1630**	50	**214.3230**	25
		200-250V		6h	**214.1633**	50	**214.3233**	25
3P+E		380-415V			**214.1636**	40	**214.3236**	25
3P+N+E		346-415V			**214.1637**	30	**214.3237**	20

Plugs and inlets for industrial applications

Plugs - IP66/IP67/IP69

OPTIMA Series >> Plugs

Screw terminals

Poles	Hz	Volt	Colour	h	OPTIMA Series 218. PLUG IP66/IP67/IP69 CABLE GLAND 16A		OPTIMA Series 218. PLUG IP66/IP67/IP69 CABLE GLAND 32A	
2P+E	50Hz 60Hz	100-130V		4h	**218.1630**	10/40	**218.3230**	10/40
		200-250V		6h	**218.1633**	10/40	**218.3233**	10/40
		380-415V		9h	**218.1638**	10/40	**218.3238**	10/40
		480-500V		7h	**218.16336**	10/40	**218.32336**	10/40
		TST>50V		12h	**218.16333**	10/40	**218.32333**	10/40
	>300-500Hz	>50V		2h	**218.16332**	10/40	**218.32332**	10/40
	DC	>50-250V		3h	**218.16334**	10/40	**218.32334**	10/40
		>250V		8h	**218.16338**	10/40	**218.32338**	10/40
3P+E	50Hz 60Hz	100-130V		4h	**218.1631**	10/40	**218.3231**	10/40
		200-250V		9h	**218.1634**	10/40	**218.3234**	10/40
		380-415V		6h	**218.1636**	10/40	**218.3236**	10/40
		380V 50Hz / 440V 60Hz		3h	**218.16364**	10/40	**218.32364**	10/40
		480-500V		7h	**218.16366**	10/40	**218.32366**	10/40
		600-690V		5h	**218.16367**	10/40	**218.32367**	10/40
	60Hz	440-460V		11h	**218.16365**	10/40	**218.32365**	10/40
	100-300Hz	>50V		10h	**218.16361**	10/40	**218.32361**	10/40
	>300-500Hz			2h	**218.16362**	10/40	**218.32362**	10/40
3P+N+E	50Hz 60Hz	100-130V		4h	**218.1632**	10/40	**218.3232**	10/40
		208-250V		9h	**218.1635**	10/40	**218.3235**	10/40
		346-415V		6h	**218.1637**	10/40	**218.3237**	10/40
		380V 50Hz / 440V 60Hz		3h	**218.16374**	10/40	**218.32374**	10/40
		480-500V		7h	**218.16376**	10/40	**218.32376**	10/40
		600-690V		5h	**218.16377**	10/40	**218.32377**	10/40
	60Hz	440-460V		11h	**218.16375**	10/40	**218.32375**	10/40
	>300-500Hz	>50V		2h	**218.16372**	10/40	**218.32372**	10/40

Terminals
Screw terminals

Terminals
Spring terminals (FAST WIRING)

Terminals
Perforating terminals (FAST WIRING)

OPTIMA Series >> Plugs

					OPTIMA Series
					218.
					Perforating terminals
					PLUG
					IP66/IP67/IP69
					CABLE GLAND
Poles	**Hz**	**Volt**	**Colour**	**h**	16A
2P+E	50Hz 60Hz	100-130V	yellow	4h	**218.1630P** 10/40
		200-250V	blue	6h	**218.1633P** 10/40
3P+E		380-415V	red	9h	**218.1638P** 10/40
		200-250V	blue		**218.1634P** 10/40
3P+N+E		380-415V	red	6h	**218.1636P** 10/40
		346-415V			**218.1637P** 10/40

					OPTIMA Series
					218.
					Spring terminals
					PLUG
					IP66/IP67/IP69
					CABLE GLAND
Poles	**Hz**	**Volt**	**Colour**	**h**	32A
2P+E	50Hz 60Hz	100-130V	yellow	4h	**218.3230F** 10/40
		200-250V	blue	6h	**218.3233F** 10/40
3P+E		380-415V	red	9h	**218.3238F** 10/40
		200-250V	blue		**218.3234F** 10/40
		380-415V		6h	**218.3236F** 10/40
		380V 50Hz / 440V 60Hz	red	3h	**218.32364F** 10/40
3P+N+E		346-415V		6h	**218.3237F** 10/40

Plugs and inlets for industrial applications

Plugs - IP66/IP67/IP69

OPTIMA Series >> Plugs

Mantle terminals

Poles	Hz	Volt	Colour	h	OPTIMA Series 218. PLUG IP66/IP67/IP69 CABLE GLAND 63A		OPTIMA Series 218. PLUG IP66/IP67/IP69 CABLE GLAND 125A	
2P+E	50Hz 60Hz	100-130V		4h	**218.6330**	6/24	**218.12530**	1/8
		200-250V		6h	**218.6333**	6/24	**218.12533**	1/8
		380-415V		9h	**218.6338**	6/24	**218.12538**	1/8
		480-500V		7h	**218.63336**	6/24	**218.125336**	1/8
		TST>50V		12h	**218.63333**	6/24	**218.125333**	1/8
	>300-500Hz	>50V		2h	**218.63332**	6/24	**218.125332**	1/8
	DC	>50-250V		3h	**218.63334**	6/24	**218.125334**	1/8
		>250V		8h	**218.63338**	6/24	**218.125338**	1/8
3P+E	50Hz 60Hz	100-130V		4h	**218.6331**	6/24	**218.12531**	1/8
		200-250V		9h	**218.6334**	6/24	**218.12534**	1/8
		380-415V		6h	**218.6336**	6/24	**218.12536**	1/8
		380V 50Hz / 440V 60Hz		3h	**218.63364**	6/24	**218.125364**	1/8
		480-500V		7h	**218.63366**	6/24	**218.125366**	1/8
		600-690V		5h	**218.63367**	6/24	**218.125367**	1/8
	60Hz	440-460V		11h	**218.63365**	6/24	**218.125365**	1/8
	100-300Hz	>50V		10h	**218.63361**	6/24	**218.125361**	1/8
	>300-500Hz			2h	**218.63362**	6/24	**218.125362**	1/8
3P+N+E	50Hz 60Hz	100-130V		4h	**218.6332**	6/24	**218.12532**	1/8
		208-250V		9h	**218.6335**	6/24	**218.12535**	1/8
		346-415V		6h	**218.6337**	6/24	**218.12537**	1/8
		380V 50Hz / 440V 60Hz		3h	**218.63374**	6/24	**218.125374**	1/8
		480-500V		7h	**218.63376**	6/24	**218.125376**	1/8
		600-690V		5h	**218.63377**	6/24	**218.125377**	1/8
	60Hz	440-460V		11h	**218.63375**	6/24	**218.125375**	1/8
	>300-500Hz	>50V		2h	**218.63372**	6/24	**218.125372**	1/8

Terminals
Mantle terminals (EASY-PLUG)

Terminals
Perforating terminals (FAST WIRING)

Terminals
Screw terminals

OPTIMA Series >> Plugs [Transparent version]

					OPTIMA Series			
					218.			
					Perforating terminals		Screw terminals	
					PLUG			
					IP66/IP67/IP69			
					CABLE GLAND			
Poles	**Hz**	**Volt**	**Colour**	**h**	16A			
2P+E	50Hz 60Hz	100-130V		4h	**218.1630P.TR**	10/40	**218.1630.TR**	10/40
		200-250V		6h	**218.1633P.TR**	10/40	**218.1633.TR**	10/40

- Transparent grip

OPTIMA-REVERSE Series >> Plugs with phase inverter

					OPTIMA-REVERSE Series			
					218.			
					Screw terminals			
					PLUG			
					IP66/IP67/IP69			
					CABLE GLAND			
Poles	**Hz**	**Volt**	**Colour**	**h**	16A		32A	
3P+E	50Hz 60Hz	380-415V		6h	**218.1636RV**	10/40	**218.3236RV**	10/40
3P+N+E		346-415V			**218.1637RV**	10/40	**218.3237RV**	10/40

- Phase inverter

Plugs and inlets for industrial applications

Plugs - IP66/IP67/IP69

OPTIMA-HD Series >> Plugs

						OPTIMA-HD Series	
						218.	
						Screw terminals	
						PLUG	
						IP66/IP67/IP69	
Current	**Poles**	**Hz**	**Volt**	**Colour**	**h**	CABLE GLAND	
16A	2P+E	50Hz 60Hz	200-250V		6h	**218.1633.KX**	10/40
	3P+E		380-415V			**218.1636.KX**	10/40
	3P+N+E		208-250V		9h	**218.1635.KX**	10/40
			346-415V		6h	**218.1637.KX**	10/40
32A	2P+E		200-250V			**218.3233.KX**	10/40
	3P+E		380-415V			**218.3236.KX**	10/40
			380V 50Hz / 440V 60Hz		3h	**218.32364.KX**	1/12
	3P+N+E		208-250V		9h	**218.3235.KX**	10/40
			346-415V		6h	**218.3237.KX**	10/40
63A	2P+E		200-250V			**218.6333.KX**	6/24
	3P+E		380-415V			**218.6336.KX**	6/24
		60Hz	440-460V		11h	**218.63365.KX**	6/24
	3P+N+E	50Hz 60Hz	208-250V		9h	**218.6335.KX**	6/24
			346-415V		6h	**218.6337.KX**	6/24
125A	2P+E		200-250V			**218.12533.KX**	1/8
	3P+E		380-415V			**218.12536.KX**	1/8
	3P+N+E		208-250V		9h	**218.12535.KX**	1/8
			346-415V		6h	**218.12537.KX**	1/8

HD High impact resistance

\- High heat and fire resistance

Terminals
Screw terminals

EUREKA Series >> Plugs

EUREKA Series

226.

Screw terminals [Angled outlet]

PLUG
IP66/IP67
CABLE GLAND

Poles	Hz	Volt	Colour	h	16A		32A	
2P+E	50Hz 60Hz	100-130V		4h	**226.1630**	10/100	**226.3230**	10/40
		200-250V		6h	**226.1633**	10/100	**226.3233**	10/40
3P+E		380-415V			**226.1636**	10/100	**226.3236**	10/40
		380V 50Hz / 440V 60Hz		3h			**226.32364**	10/40
		600-690V		5h	**226.16367**	10/100		
3P+N+E		346-415V		6h	**226.1637**	10/50	**226.3237**	10/40

Plugs and inlets for industrial applications

Flush mounting appliance inlets - IP44/IP54

OPTIMA Series >> Flush mounting appliance inlets

OPTIMA Series

243.

Screw terminals [Straight outlet]

Mantle terminals [Straight outlet]

Poles	Hz	Volt	Colour	h	APPLIANCE INLET IP44/IP54 75x75mm 16A		APPLIANCE INLET IP44/IP54 75x75mm 32A		APPLIANCE INLET IP44/IP54 100x110mm 63A	
2P+E	50Hz 60Hz	100-130V		4h	**243.1690**	10/50	**243.3290**	10/50	**243.6390**	
		200-250V		6h	**243.1693**	10/50	**243.3293**	10/50	**243.6393**	10
		380-415V		9h	**243.1698**	10/50	**243.3298**	10/50	**243.6398**	
		480-500V		7h					**243.63936**	
		TST>50V		12h					**243.63933**	
	>300-500Hz	>50V		2h					**243.63932**	
	DC	>50-250V		3h					**243.63934**	
		>250V		8h					**243.63938**	
3P+E	50Hz 60Hz	100-130V		4h	**243.1691**	10/50	**243.3291**	10/50	**243.6391**	
		200-250V		9h	**243.1694**	10/50	**243.3294**	10/50	**243.6394**	
		380-415V		6h	**243.1696**	10/50	**243.3296**	10/50	**243.6396**	10
		380V 50Hz / 440V 60Hz		3h	**243.16964**	10/50	**243.32964**	10/50	**243.63964**	
		480-500V		7h					**243.63966**	
		600-690V		5h					**243.63967**	
	60Hz	440-460V		11h	**243.16965**	10/50	**243.32965**	10/50	**243.63965**	
	100-300Hz	>50V		10h					**243.63961**	
	>300-500Hz			2h					**243.63962**	
3P+N+E	50Hz 60Hz	100-130V		4h	**243.1692**	10/50	**243.3292**	10/40	**243.6392**	
		208-250V		9h	**243.1695**	10/50	**243.3295**	10/40	**243.6395**	
		346-415V		6h	**243.1697**	10/50	**243.3297**	10/40	**243.6397**	10
		380V 50Hz / 440V 60Hz		3h	**243.16974**	10/50	**243.32974**	10/40	**243.63974**	
		480-500V		7h					**243.63976**	
		600-690V		5h					**243.63977**	
	60Hz	440-460V		11h	**243.16975**	10/50	**243.32975**	10/40	**243.63975**	
	>300-500Hz	>50V		2h					**243.63972**	

Terminals
Mantle terminals (EASY-PLUG)

Terminals
Screw terminals

OPTIMA-REVERSE Series >> Flush mounting appliance inlets with phase inverter

					OPTIMA-REVERSE Series			
					243.			
					Screw terminals [Straight outlet]			
					APPLIANCE INLET			
					IP44/IP54			
					75x75mm			
Poles	**Hz**	**Volt**	**Colour**	**h**	16A		32A	
3P+E	50Hz 60Hz	380-415V		6h	**243.1696RV**	10/50	**243.3296RV**	10/50
3P+N+E		346-415V			**243.1697RV**	10/50	**243.3297RV**	10/40

- Phase inverter

OPTIMA-REVERSE Series
Operating principle of the phase inverter

Plugs and inlets for industrial applications

Flush mounting appliance inlets - IP44/IP54

EUREKA Series >> Appliance inlets

					EUREKA Series			
					242.			
					Screw terminals [90° angled]			
					APPLIANCE INLET			
					IP44			
					70x87mm			
					PG 16			
Poles	**Hz**	**Volt**	**Colour**	**h**	16A		32A	
2P+E	50Hz 60Hz	100-130V		4h	**242.1690**	10/100	**242.3290**	10/60
		200-250V		6h	**242.1693**	10/100	**242.3293**	10/60
		380-415V		9h	**242.1698**	10/100	**242.3298**	10/60
		480-500V		7h	**242.16936**		**242.32936**	10/60
		TST>50V		12h	**242.16933**		**242.32933**	
	>300-500Hz	>50V		2h	**242.16932**	10/100	**242.32932**	
	DC	>50-250V		3h	**242.16934**	10/100	**242.32934**	10/60
		>250V		8h	**242.16938**	10/100	**242.32938**	10/60
3P+E	50Hz 60Hz	100-130V		4h	**242.1691**	10/100	**242.3291**	10/60
		200-250V		9h	**242.1694**	10/100	**242.3294**	10/60
		380-415V		6h	**242.1696**	10/100	**242.3296**	10/60
		380V 50Hz / 440V 60Hz		3h	**242.16964**		**242.32964**	10/60
		440-460V		11h	**242.16965**	10/100	**242.32965**	10/60
		480-500V		7h	**242.16966**	10/100	**242.32966**	10/60
		600-690V		5h	**242.16967**	10/100	**242.32967**	10/60
	100-300Hz	>50V		10h	**242.16961**	10/100	**242.32961**	
	>300-500Hz			2h	**242.16962**	10/100	**242.32962**	10/60
3P+N+E	50Hz 60Hz	100-130V		4h	**242.1692**	10/60	**242.3292**	10/40
		208-250V		9h	**242.1695**	10/60	**242.3295**	10/40
		346-415V		6h	**242.1697**	10/60	**242.3297**	10/40
		380V 50Hz / 440V 60Hz		3h	**242.16974**	10/60	**242.32974**	10
		480-500V		7h	**242.16976**	10/60	**242.32976**	10
		600-690V		5h	**242.16977**		**242.32977**	10
	60Hz	440-460V		11h	**242.16975**		**242.32975**	10
	>300-500Hz	>50V		2h	**242.16972**	10/60	**242.32972**	10/40

Terminals
Screw terminals

OPTIMA Series >> Flush mounting appliance inlets

Screw terminals [Straight outlet]

Poles	Hz	Volt	Colour	h	OPTIMA Series 248. APPLIANCE INLET IP66/IP67/IP69 75x75mm 16A		32A	
2P+E	50Hz 60Hz	100-130V		4h	**248.1690**	10/50	**248.3290**	10/50
		200-250V		6h	**248.1693**	10/50	**248.3293**	10/50
		380-415V		9h	**248.1698**	10/50	**248.3298**	10/50
		480-500V		7h	**248.16936**	10/50	**248.32936**	10/50
		TST>50V		12h	**248.16933**	10/50	**248.32933**	10/50
	>300-500Hz	>50V		2h	**248.16932**	10/50	**248.32932**	10/50
	DC	>50-250V		3h	**248.16934**	10/50	**248.32934**	10/50
		>250V		8h	**248.16938**	10/50	**248.32938**	10/50
3P+E	50Hz 60Hz	100-130V		4h	**248.1691**	10/50	**248.3291**	10/50
		200-250V		9h	**248.1694**	10/50	**248.3294**	10/50
		380-415V		6h	**248.1696**	10/50	**248.3296**	10/50
		380V 50Hz / 440V 60Hz		3h	**248.16964**	10/50	**248.32964**	10/50
		480-500V		7h	**248.16966**	10/50	**248.32966**	10/50
		600-690V		5h	**248.16967**	10/50	**248.32967**	10/50
	60Hz	440-460V		11h	**248.16965**	10/50	**248.32965**	10/50
	100-300Hz	>50V		10h	**248.16961**	10/50	**248.32961**	10/50
	>300-500Hz			2h	**248.16962**	10/50	**248.32962**	10/50
3P+N+E	50Hz 60Hz	100-130V		4h	**248.1692**	10/50	**248.3292**	10/40
		208-250V		9h	**248.1695**	10/50	**248.3295**	10/40
		346-415V		6h	**248.1697**	10/50	**248.3297**	10/40
		380V 50Hz / 440V 60Hz		3h	**248.16974**	10/50	**248.32974**	10/40
		480-500V		7h	**248.16976**	10/50	**248.32976**	10/40
		600-690V		5h	**248.16977**	10/50	**248.32977**	10/40
	60Hz	440-460V		11h	**248.16975**	10/50	**248.32975**	10/40
	>300-500Hz	>50V		2h	**248.16972**	10/50	**248.32972**	10/40

Plugs and inlets for industrial applications

Flush mounting appliance inlets - IP66/IP67/IP69

OPTIMA Series >> Flush mounting appliance inlets

Mantle terminals [Straight outlet]

					OPTIMA Series			
					248.			
					APPLIANCE INLET			
					IP66/IP67/IP69			
					100x110mm		114x114mm	
Poles	**Hz**	**Volt**	**Colour**	**h**	63A		125A	
2P+E	50Hz 60Hz	100-130V		4h	**248.6390**	10	**248.12590**	10
		200-250V		6h	**248.6393**	10	**248.12593**	10
		380-415V		9h	**248.6398**	10	**248.12598**	10
		480-500V		7h	**248.63936**	10	**248.125936**	10
		TST>50V		12h	**248.63933**	10	**248.125933**	10
	>300-500Hz	>50V		2h	**248.63932**	10	**248.125932**	10
	DC	>50-250V		3h	**248.63934**	10	**248.125934**	10
		>250V		8h	**248.63938**	10	**248.125938**	10
3P+E	50Hz 60Hz	100-130V		4h	**248.6391**	10	**248.12591**	10
		200-250V		9h	**248.6394**	10	**248.12594**	10
		380-415V		6h	**248.6396**	10	**248.12596**	10
		380V 50Hz / 440V 60Hz		3h	**248.63964**	10	**248.125964**	10
		480-500V		7h	**248.63966**	10	**248.125966**	10
		600-690V		5h	**248.63967**	10	**248.125967**	10
	60Hz	440-460V		11h	**248.63965**	10	**248.125965**	10
	100-300Hz	>50V		10h	**248.63961**	10	**248.125961**	10
	>300-500Hz			2h	**248.63962**	10	**248.125962**	10
3P+N+E	50Hz 60Hz	100-130V		4h	**248.6392**	10	**248.12592**	10
		208-250V		9h	**248.6395**	10	**248.12595**	10
		346-415V		6h	**248.6397**	10	**248.12597**	10
		380V 50Hz / 440V 60Hz		3h	**248.63974**	10	**248.125974**	10
		480-500V		7h	**248.63976**	10	**248.125976**	10
		600-690V		5h	**248.63977**	10	**248.125977**	10
	60Hz	440-460V		11h	**248.63975**	10	**248.125975**	10
	>300-500Hz	>50V		2h	**248.63972**	10	**248.125972**	10

Terminals
Mantle terminals (EASY-PLUG)

Terminals
Screw terminals

OPTIMA-REVERSE Series >> Flush mounting appliance inlets with phase inverter

					OPTIMA-REVERSE Series			
					248.			
					Screw terminals [Straight outlet]			
					APPLIANCE INLET			
					IP66/IP67/IP69			
					75x75mm			
Poles	**Hz**	**Volt**	**Colour**	**h**	16A		32A	
3P+E	50Hz 60Hz	380-415V		6h	**248.1696RV**	10/50	**248.3296RV**	10/50
3P+N+E		346-415V			**248.1697RV**	10/50	**248.3297RV**	10/40

- Phase inverter

OPTIMA-REVERSE Series
Operating principle of the phase inverter

Plugs and inlets for industrial applications

Flush mounting appliance inlets - IP66/IP67/IP69

EUREKA Series >> Appliance inlets - 90° angled

Screw terminals [90° angled]

Poles	Hz	Volt	Colour	h	EUREKA Series 247. APPLIANCE INLET IP66/IP67 70x87mm PG 16 — 16A		32A	
2P+E	50Hz 60Hz	100-130V		4h	**247.1690**	10/100	**247.3290**	10/40
		200-250V		6h	**247.1693**	10/100	**247.3293**	10/40
		380-415V		9h	**247.1698**	10/100	**247.3298**	10/40
		480-500V		7h	**247.16936**	10/100	**247.32936**	10/40
		TST>50V		12h	**247.16933**		**247.32933**	
	>300-500Hz	>50V		2h	**247.16932**	10/100	**247.32932**	
	DC	>50-250V		3h	**247.16934**	10/100	**247.32934**	10/40
		>250V		8h	**247.16938**		**247.32938**	
3P+E	50Hz 60Hz	100-130V		4h	**247.1691**	10/60	**247.3291**	10/40
		200-250V		9h	**247.1694**	10/60	**247.3294**	10/40
		380-415V		6h	**247.1696**	10/60	**247.3296**	10/40
		380V 50Hz / 440V 60Hz		3h	**247.16964**	10/60	**247.32964**	10/40
		480-500V		7h	**247.16966**	10/60	**247.32966**	10/40
		600-690V		5h	**247.16967**	10/60	**247.32967**	10/40
	60Hz	440-460V		11h	**247.16965**	10/60	**247.32965**	10/40
	100-300Hz	>50V		10h	**247.16961**		**247.32961**	10/40
	>300-500Hz			2h	**247.16962**		**247.32962**	
3P+N+E	50Hz 60Hz	100-130V		4h	**247.1692**	10/50	**247.3292**	10/40
		208-250V		9h	**247.1695**	10/50	**247.3295**	10/40
		346-415V		6h	**247.1697**	10/50	**247.3297**	10/40
		380V 50Hz / 440V 60Hz		3h	**247.16974**	10/50	**247.32974**	10/40
		480-500V		7h	**247.16976**	10/50	**247.32976**	10
		600-690V		5h	**247.16977**		**247.32977**	10/40
	60Hz	440-460V		11h	**247.16975**		**247.32975**	10/40
	>300-500Hz	>50V		2h	**247.16972**	10/50	**247.32972**	10/40

Terminals
Screw terminals

Terminals
Mantle terminals (EASY-PLUG)

OPTIMA-TOP Series >> Surface mounting appliance inlets

					OPTIMA-TOP Series	
					240.	
					Mantle terminals	
					APPLIANCE INLET	
					IP44/IP54	
					M40X1,5	
Poles	**Hz**	**Volt**	**Colour**	**h**	63A	
2P+E	50Hz 60Hz	100-130V		4h	**240.6390T**	4
		200-250V		6h	**240.6393T**	4
		380-415V		9h	**240.6398T**	4
		480-500V		7h	**240.63936T**	
		TST>50V		12h	**240.63933T**	
	>300-500Hz	>50V		2h	**240.63932T**	
	DC	>50-250V		3h	**240.63934T**	
		>250V		8h	**240.63938T**	
3P+E	50Hz 60Hz	100-130V		4h	**240.6391T**	4
		200-250V		9h	**240.6394T**	4
		380-415V		6h	**240.6396T**	4
		380V 50Hz / 440V 60Hz		3h	**240.63964T**	
		440-460V		11h	**240.63965T**	
		480-500V		7h	**240.63966T**	
		600-690V		5h	**240.63967T**	
	100-300Hz	>50V		10h	**240.63961T**	
	>300-500Hz			2h	**240.63962T**	
3P+N+E	50Hz 60Hz	100-130V		4h	**240.6392T**	4
		208-250V		9h	**240.6395T**	4
		346-415V		6h	**240.6397T**	4
		380V 50Hz / 440V 60Hz		3h	**240.63974T**	
		480-500V		7h	**240.63976T**	
		600-690V		5h	**240.63977T**	
	60Hz	440-460V		11h	**240.63975T**	
	>300-500Hz	>50V		2h	**240.63972T**	

- Cable gland included

Plugs and inlets for industrial applications

Surface mounting appliance inlets - IP66/IP67/IP69

OPTIMA-TOP Series >> Surface mounting appliance inlets

Mantle terminals

					OPTIMA-TOP Series			
					245.			
					APPLIANCE INLET			
					IP66/IP67			
					M40X1,5		M63X1,5	
Poles	**Hz**	**Volt**	**Colour**	**h**	63A		125A	
2P+E	50Hz 60Hz	100-130V		4h	**245.6390T**	4	**245.12590T**	1/4
		200-250V		6h	**245.6393T**	4	**245.12593T**	1/4
		380-415V		9h	**245.6398T**	4	**245.12598T**	1/4
		480-500V		7h	**245.63936T**		**245.125936T**	
		TST>50V		12h	**245.63933T**		**245.125933T**	
	>300-500Hz	>50V		2h	**245.63932T**		**245.125932T**	
	DC	>50-250V		3h	**245.63934T**		**245.125934T**	
		>250V		8h	**245.63938T**		**245.125938T**	
3P+E	50Hz 60Hz	100-130V		4h	**245.6391T**	4	**245.12591T**	1/4
		200-250V		9h	**245.6394T**	4	**245.12594T**	1/4
		380-415V		6h	**245.6396T**	4	**245.12596T**	1/4
		380V 50Hz / 440V 60Hz		3h	**245.63964T**		**245.125964T**	
		480-500V		7h	**245.63966T**		**245.125966T**	
		600-690V		5h	**245.63967T**		**245.125967T**	
	60Hz	440-460V		11h	**245.63965T**		**245.125965T**	
	100-300Hz	>50V		10h	**245.63961T**		**245.125961T**	
	>300-500Hz			2h	**245.63962T**		**245.125962T**	
3P+N+E	50Hz 60Hz	100-130V		4h	**245.6392T**	4	**245.12592T**	1/4
		208-250V		9h	**245.6395T**	4	**245.12595T**	1/4
		346-415V		6h	**245.6397T**	4	**245.12597T**	1/4
		380V 50Hz / 440V 60Hz		3h	**245.63974T**		**245.125974T**	
		480-500V		7h	**245.63976T**	4	**245.125976T**	
		600-690V		5h	**245.63977T**		**245.125977T**	
	60Hz	440-460V		11h	**245.63975T**		**245.125975T**	
	>300-500Hz	>50V		2h	**245.63972T**		**245.125972T**	

- Cable gland included

Terminals
Mantle terminals (EASY-PLUG)

			ACCESSORIES	
			570.	
Description	**Current**	**Poles**	**Cover for IP66/IP67/IP69 plugs**	
PLUG CAP	16A 20A	2P+E	**570.90163**	10/100
		3P+E	**570.90164**	10/100
		3P+N+E	**570.90165**	10/100
	30A 32A		**570.90325**	10/100
		2/3P+E	**570.90324**	10/100
	60A 63A	ALL	**570.9063**	10
	100A 125A		**570.9125**	10

1.2

Connectors and sockets for industrial applications

- Connectors - IP44/IP54
- Connectors - IP66/IP67/IP69
- Flush mounting socket outlets - IP44/IP54
- Flush mounting socket outlets - IP66/IP67/IP69
- Surface mounting socket outlets - IP44/IP54
- Surface mounting socket outlets - IP66/IP67/IP69
- Surface mounting switched socket outlets without interlock - IP44/IP54
- Surface mounting switched socket outlets without interlock - IP66/IP67/IP69
- Domestic standard socket for industrial applications - IP54
- BS socket for industrial applications - IP66
- Accessories for sockets

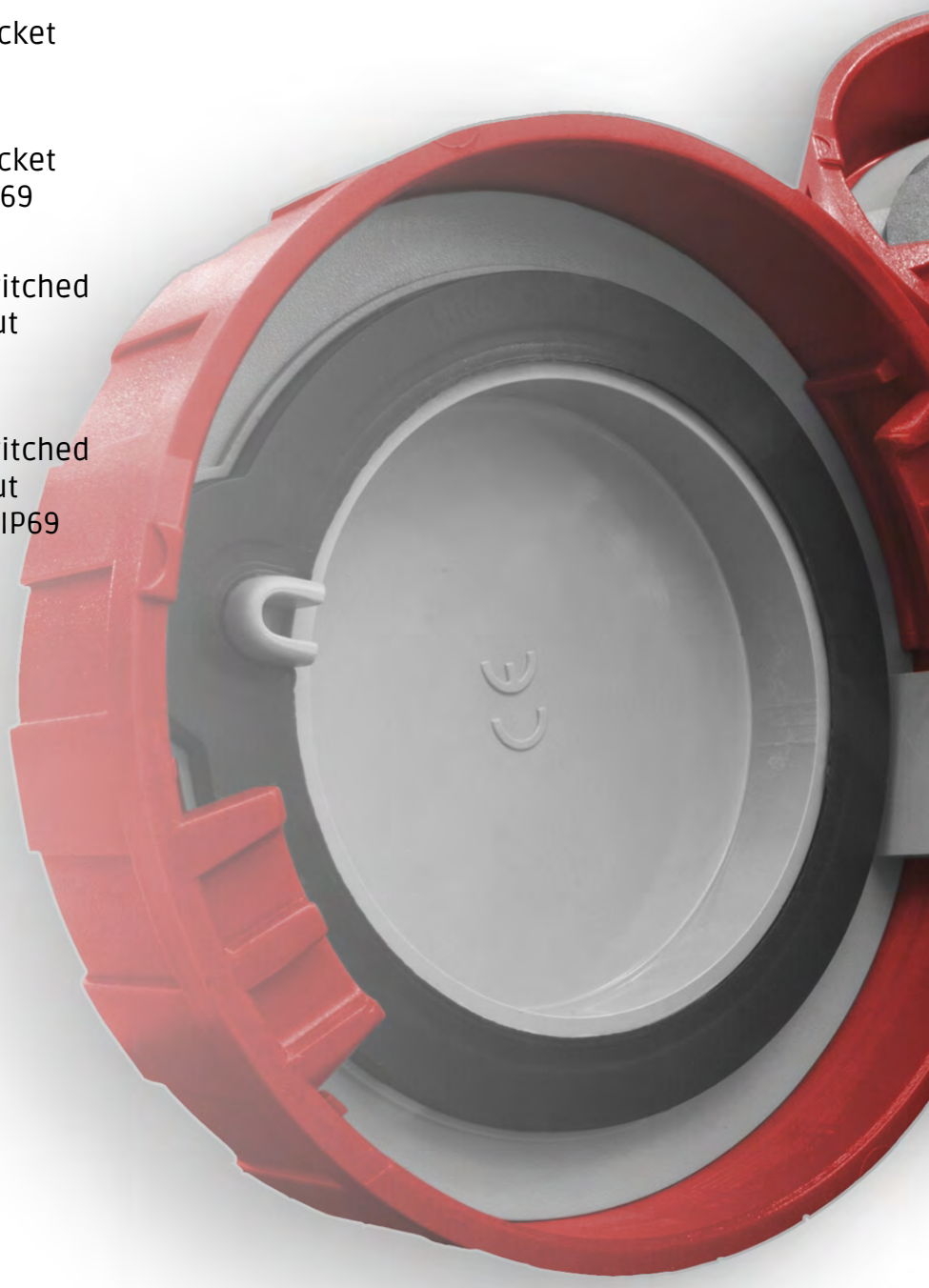

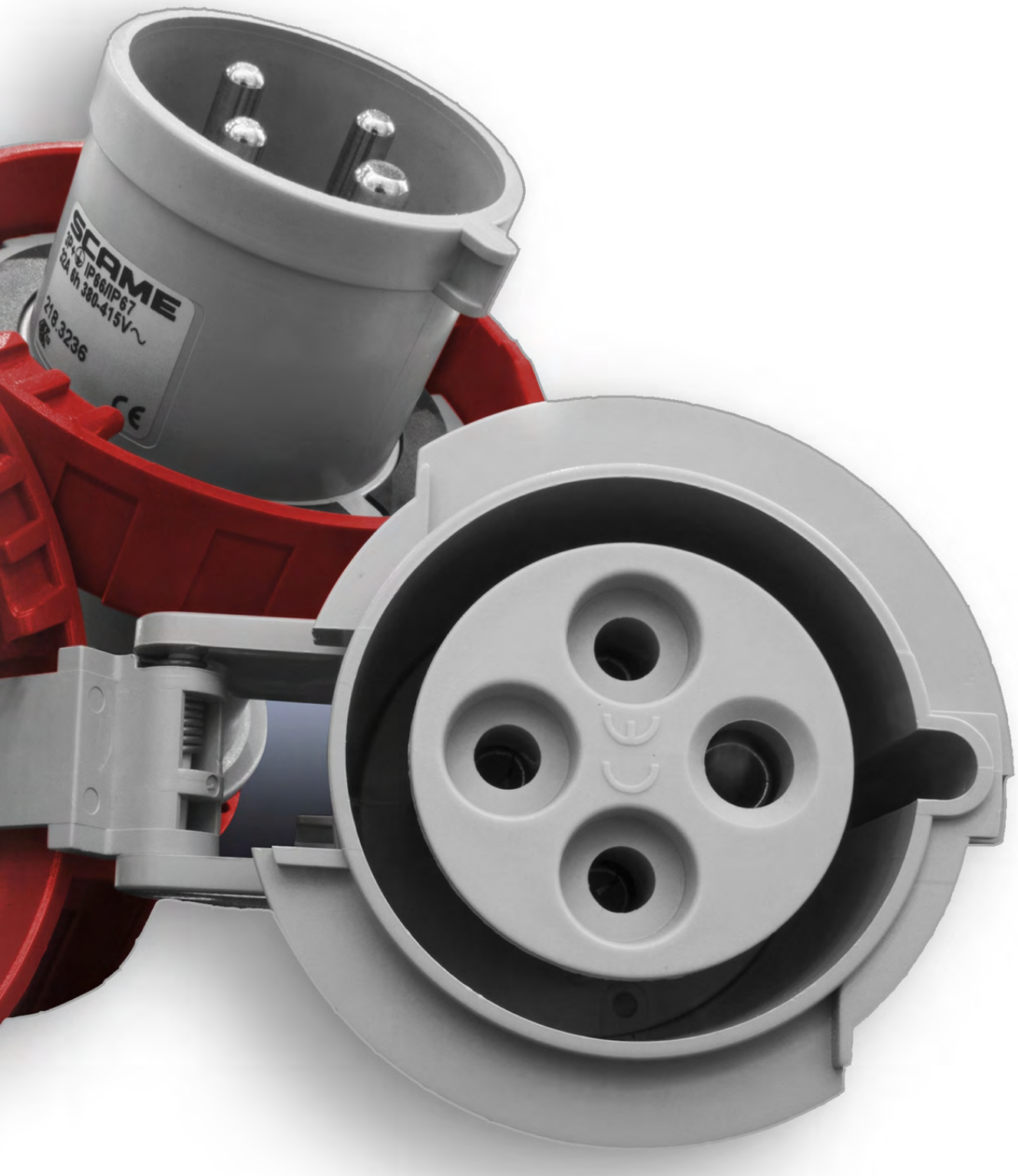
SCAME
IP66/IP67
32A 6h 380-415V~
218.3236

Connectors and sockets for industrial applications

Connectors - IP44/IP54

OPTIMA Series >> Connectors

OPTIMA Series

313.

Screw terminals

Poles	Hz	Volt	Colour	h	CONNECTOR IP44/IP54 CABLE GLAND 16A		CONNECTOR IP44/IP54 CABLE GLAND 32A	
2P+E	50Hz 60Hz	100-130V		4h	**313.1640**	10/50	**313.3240**	10/40
		200-250V		6h	**313.1643**	10/50	**313.3243**	10/40
		380-415V		9h	**313.1648**	10/50	**313.3248**	10/40
		480-500V		7h	**313.16436**	10/50	**313.32436**	10/40
		TST>50V		12h	**313.16433**	10/50	**313.32433**	10/40
	>300-500Hz	>50V		2h	**313.16432**	10/50	**313.32432**	10/40
	DC	>50-250V		3h	**313.16434**	10/50	**313.32434**	10/40
		>250V		8h	**313.16438**	10/50	**313.32438**	10/40
3P+E	50Hz 60Hz	100-130V		4h	**313.1641**	10/50	**313.3241**	10/40
		200-250V		9h	**313.1644**	10/50	**313.3244**	10/40
		380-415V		6h	**313.1646**	10/50	**313.3246**	10/40
		380V 50Hz / 440V 60Hz		3h	**313.16464**	10/50	**313.32464**	10/40
		480-500V		7h	**313.16466**	10/50	**313.32466**	10/40
		600-690V		5h	**313.16467**	10/50	**313.32467**	10/40
	60Hz	440-460V		11h	**313.16465**	10/50	**313.32465**	10/40
	100-300Hz	>50V		10h	**313.16461**	10/50	**313.32461**	10/40
	>300-500Hz			2h	**313.16462**	10/50	**313.32462**	10/40
3P+N+E	50Hz 60Hz	100-130V		4h	**313.1642**	10/50	**313.3242**	10/40
		208-250V		9h	**313.1645**	10/50	**313.3245**	10/40
		346-415V		6h	**313.1647**	10/50	**313.3247**	10/40
		380V 50Hz / 440V 60Hz		3h	**313.16474**	10/50	**313.32474**	10/40
		480-500V		7h	**313.16476**	10/50	**313.32476**	10/40
		600-690V		5h	**313.16477**	10/50	**313.32477**	10/40
	60Hz	440-460V		11h	**313.16475**	10/50	**313.32475**	10/40
	>300-500Hz	>50V		2h	**313.16472**	10/50	**313.32472**	10/40

Terminals
Screw terminals

Terminals
Spring terminals (FAST WIRING)

Terminals
Perforating terminals (FAST WIRING)

OPTIMA Series >> Connectors

Poles	Hz	Volt	Colour	h	OPTIMA Series 313. CONNECTOR IP44/IP54 CABLE GLAND 16A
					Perforating terminals
2P+E	50Hz 60Hz	100-130V		4h	**313.1640P** 10/50
		200-250V		6h	**313.1643P** 10/50
3P+E		380-415V		9h	**313.1648P** 10/50
		200-250V			**313.1644P** 10/50
3P+N+E		380-415V		6h	**313.1646P** 10/50
		346-415V			**313.1647P** 10/50

Poles	Hz	Volt	Colour	h	OPTIMA Series 313. CONNECTOR IP44/IP54 CABLE GLAND 32A
					Spring terminals
2P+E	50Hz 60Hz	100-130V		4h	**313.3240F** 10/40
		200-250V		6h	**313.3243F** 10/40
3P+E		380-415V		9h	**313.3248F** 10/40
		200-250V			**313.3244F** 10/40
3P+N+E		380-415V		6h	**313.3246F** 10/40
		346-415V			**313.3247F** 10/40

OPTIMA Series >> Connectors

Mantle terminals

Poles	Hz	Volt	Colour	h	OPTIMA Series 313. CONNECTOR IP44/IP54 CABLE GLAND 63A	
2P+E	50Hz 60Hz	100-130V		4h	**313.6340**	6/24
		200-250V		6h	**313.6343**	6/24
		380-415V		9h	**313.6348**	6/24
		480-500V		7h	**313.63436**	6/24
		TST>50V		12h	**313.63433**	6/24
	>300-500Hz	>50V		2h	**313.63432**	6/24
	DC	>50-250V		3h	**313.63434**	6/24
		>250V		8h	**313.63438**	6/24
3P+E	50Hz 60Hz	100-130V		4h	**313.6341**	6/24
		200-250V		9h	**313.6344**	6/24
		380-415V		6h	**313.6346**	6/24
		380V 50Hz / 440V 60Hz		3h	**313.63464**	6/24
		480-500V		7h	**313.63466**	6/24
		600-690V		5h	**313.63467**	6/24
	60Hz	440-460V		11h	**313.63465**	6/24
	100-300Hz	>50V		10h	**313.63461**	6/24
	>300-500Hz			2h	**313.63462**	6/24
3P+N+E	50Hz 60Hz	100-130V		4h	**313.6342**	6/24
		208-250V		9h	**313.6345**	6/24
		346-415V		6h	**313.6347**	6/24
		380V 50Hz / 440V 60Hz		3h	**313.63474**	6/24
		480-500V		7h	**313.63476**	6/24
		600-690V		5h	**313.63477**	6/24
	60Hz	440-460V		11h	**313.63475**	6/24
	>300-500Hz	>50V		2h	**313.63472**	6/24

Terminals
Mantle terminals (EASY-PLUG)

Terminals
Perforating terminals (FAST WIRING)

Terminals
Screw terminals

OPTIMA Series >> Connectors [Transparent version]

					OPTIMA Series			
					313.			
					Screw terminals		Perforating terminals	
					CONNECTOR			
					IP44/IP54			
					CABLE GLAND			
Poles	**Hz**	**Volt**	**Colour**	**h**	16A			
2P+E	50Hz 60Hz	100-130V		4h	**313.1640.TR**	10/50	**313.1640P.TR**	10/50
		200-250V		6h	**313.1643.TR**	10/50	**313.1643P.TR**	10/50

- Transparent grip

Connectors and sockets for industrial applications

Connectors - IP44/IP54

OPTIMA Series >> Connectors [SAFE-IN]

					OPTIMA Series
					313.
					Screw terminals
					CONNECTOR
					IP44/IP54
					CABLE GLAND
Poles	**Hz**	**Volt**	**Colour**	**h**	16A
2P+E	50Hz 60Hz	100-130V		4h	**313.1640H** 10/50
		200-250V		6h	**313.1643H** 10/50
3P+E		380-415V		9h	**313.1648H** 10/50
		200-250V			**313.1644H** 10/50
3P+N+E		380-415V		6h	**313.1646H** 10/50
		346-415V			**313.1647H** 10/50

Sockets with "SAFE-IN" safety device

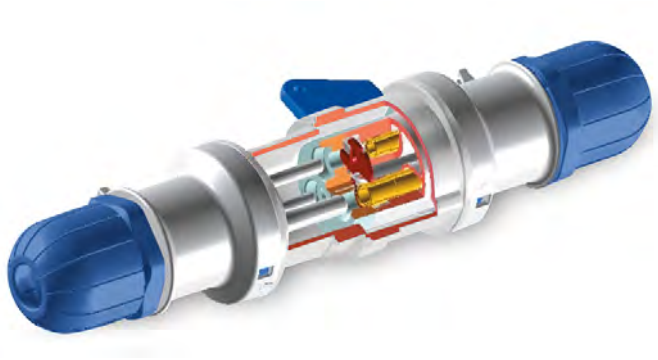

THE "SAFE-IN" SAFETY DEVICE

The "SAFE-IN" safety device assembled on the 16A industrial sockets works like the protection installed on household sockets, i.e., by means of an appropriate shutter, it closes the input of the socket contact tubes and prevents accidental and voluntary contact of live parts of the socket with slim objects, such as screwdrivers or wires. This protection offers an additional safety guarantee, in addition to that already provided by the spring-loaded cover assembled on the mobile sockets.

Terminals
Screw terminals

EUREKA Series >> Connectors

EUREKA Series

321.

Screw terminals [Angled outlet]

Poles	Hz	Volt	Colour	h	CONNECTOR IP44 CABLE SLEEVE 16A		CONNECTOR IP44 CABLE SLEEVE 32A	
2P+E	50Hz 60Hz	100-130V		4h	**321.1640**	10/100	**321.3240**	10/50
		200-250V		6h	**321.1643**	10/100	**321.3243**	10/50
3P+E		380-415V			**321.1646**	10/100	**321.3246**	10/50
3P+N+E		346-415V			**321.1647**	10/100	**321.3247**	10/50

XENIA Series >> Connectors

XENIA Series

314.

Screw terminals

Poles	Hz	Volt	Colour	h	CONNECTOR IP44 CABLE GLAND 16A		CONNECTOR IP44 CABLE GLAND 32A	
2P+E	50Hz 60Hz	100-130V		4h	**314.1640**	40	**314.3240**	20
		200-250V		6h	**314.1643**	40	**314.3243**	20
3P+E		380-415V			**314.1646**	30	**314.3246**	20
3P+N+E		346-415V			**314.1647**	25	**314.3247**	15

OPTIMA Series >> Connectors

OPTIMA Series

318.

Screw terminals

Poles	Hz	Volt	Colour	h	CONNECTOR IP66/IP67/IP69 CABLE GLAND 16A		CONNECTOR IP66/IP67/IP69 CABLE GLAND 32A	
2P+E	50Hz 60Hz	100-130V		4h	**318.1640**	10/40	**318.3240**	10/40
		200-250V		6h	**318.1643**	10/40	**318.3243**	10/40
		380-415V		9h	**318.1648**	10/40	**318.3248**	10/40
		480-500V		7h	**318.16436**	10/40	**318.32436**	10/40
		TST>50V		12h	**318.16433**	10/40	**318.32433**	10/40
	>300-500Hz	>50V		2h	**318.16432**	10/40	**318.32432**	10/40
	DC	>50-250V		3h	**318.16434**	10/40	**318.32434**	10/40
		>250V		8h	**318.16438**	10/40	**318.32438**	10/40
3P+E	50Hz 60Hz	100-130V		4h	**318.1641**	10/40	**318.3241**	10/40
		200-250V		9h	**318.1644**	10/40	**318.3244**	10/40
		380-415V		6h	**318.1646**	10/40	**318.3246**	10/40
		380V 50Hz / 440V 60Hz		3h	**318.16464**	10/40	**318.32464**	10/40
		480-500V		7h	**318.16466**	10/40	**318.32466**	10/40
		600-690V		5h	**318.16467**	10/40	**318.32467**	10/40
	60Hz	440-460V		11h	**318.16465**	10/40	**318.32465**	10/40
	100-300Hz	>50V		10h	**318.16461**	10/40	**318.32461**	10/40
	>300-500Hz			2h	**318.16462**	10/40	**318.32462**	10/40
3P+N+E	50Hz 60Hz	100-130V		4h	**318.1642**	10/40	**318.3242**	10/40
		208-250V		9h	**318.1645**	10/40	**318.3245**	10/40
		346-415V		6h	**318.1647**	10/40	**318.3247**	10/40
		380V 50Hz / 440V 60Hz		3h	**318.16474**	10/40	**318.32474**	10/40
		480-500V		7h	**318.16476**	10/40	**318.32476**	10/40
		600-690V		5h	**318.16477**	10/40	**318.32477**	10/40
	60Hz	440-460V		11h	**318.16475**	10/40	**318.32475**	10/40
	>300-500Hz	>50V		2h	**318.16472**	10/40	**318.32472**	10/40

Terminals
Screw terminals

Terminals
Spring terminals (FAST WIRING)

Terminals
Perforating terminals (FAST WIRING)

OPTIMA Series >> Connectors

Poles	Hz	Volt	Colour	h	OPTIMA Series 318. CONNECTOR IP66/IP67/IP69 CABLE GLAND 16A
					Perforating terminals
2P+E	50Hz 60Hz	100-130V		4h	**318.1640P** 10/40
		200-250V		6h	**318.1643P** 10/40
3P+E		380-415V		9h	**318.1648P** 10/40
		200-250V			**318.1644P** 10/40
3P+N+E		380-415V		6h	**318.1646P** 10/40
		346-415V			**318.1647P** 10/40

Poles	Hz	Volt	Colour	h	OPTIMA Series 318. CONNECTOR IP66/IP67/IP69 CABLE GLAND 32A
					Spring terminals
2P+E	50Hz 60Hz	100-130V		4h	**318.3240F** 10/40
		200-250V		6h	**318.3243F** 10/40
3P+E		380-415V		9h	**318.3248F** 10/40
		200-250V			**318.3244F** 10/40
		380-415V		6h	**318.3246F** 10/40
		380V 50Hz / 440V 60Hz		3h	**318.32464F** 10/40
3P+N+E		346-415V		6h	**318.3247F** 10/40

OPTIMA Series >> Connectors

Mantle terminals

Poles	Hz	Volt	Colour	h	OPTIMA Series 318. CONNECTOR IP66/IP67/IP69 CABLE GLAND 63A		125A	
2P+E	50Hz 60Hz	100-130V		4h	**318.6340**	6/24	**318.12540**	1/8
		200-250V		6h	**318.6343**	6/24	**318.12543**	1/8
		380-415V		9h	**318.6348**	6/24	**318.12548**	1/8
		480-500V		7h	**318.63436**	6/24	**318.125436**	1/8
		TST>50V		12h	**318.63433**	6/24	**318.125433**	1/8
	>300-500Hz	>50V		2h	**318.63432**	6/24	**318.125432**	1/8
	DC	>50-250V		3h	**318.63434**	6/24	**318.125434**	1/8
		>250V		8h	**318.63438**	6/24	**318.125438**	1/8
3P+E	50Hz 60Hz	100-130V		4h	**318.6341**	6/24	**318.12541**	1/8
		200-250V		9h	**318.6344**	6/24	**318.12544**	1/8
		380-415V		6h	**318.6346**	6/24	**318.12546**	1/8
		380V 50Hz / 440V 60Hz		3h	**318.63464**	6/24	**318.125464**	1/8
		480-500V		7h	**318.63466**	6/24	**318.125466**	1/8
		600-690V		5h	**318.63467**	6/24	**318.125467**	1/8
	60Hz	440-460V		11h	**318.63465**	6/24	**318.125465**	1/8
	100-300Hz	>50V		10h	**318.63461**	6/24	**318.125461**	1/8
	>300-500Hz			2h	**318.63462**	6/24	**318.125462**	1/8
3P+N+E	50Hz 60Hz	100-130V		4h	**318.6342**	6/24	**318.12542**	1/8
		208-250V		9h			**318.12545**	1/8
		346-415V		6h	**318.6347**	6/24	**318.12547**	1/8
		380V 50Hz / 440V 60Hz		3h	**318.63474**	6/24	**318.125474**	1/8
		480-500V		7h	**318.63476**	6/24	**318.125476**	1/8
		600-690V		5h	**318.63477**	6/24	**318.125477**	1/8
	60Hz	440-460V		11h	**318.63475**	6/24	**318.125475**	1/8
	>300-500Hz	>50V		2h	**318.63472**	6/24	**318.125472**	1/8

Terminals
Mantle terminals (EASY-PLUG)

Terminals
Perforating terminals (FAST WIRING)

Terminals
Screw terminals

OPTIMA Series >> Connectors (transparent version)

					OPTIMA Series			
					318.			
					Perforating terminals		Screw terminals	
					CONNECTOR			
					IP66/IP67/IP69			
					CABLE GLAND			
Poles	**Hz**	**Volt**	**Colour**	**h**	16A			
2P+E	50Hz 60Hz	100-130V		4h	**318.1640P.TR**	10/40	**318.1640.TR**	10/40
		200-250V		6h	**318.1643P.TR**	10/40	**318.1643.TR**	10/40

- Transparent grip

Connectors and sockets for industrial applications

Connectors - IP66/IP67/IP69

OPTIMA Series >> Connectors [SAFE-IN]

					OPTIMA Series
					318.
					Screw terminals
					CONNECTOR
					IP66/IP67/IP69
					CABLE GLAND
Poles	**Hz**	**Volt**	**Colour**	**h**	16A
2P+E	50Hz 60Hz	100-130V		4h	**318.1640H** 10/40
		200-250V		6h	**318.1643H** 10/40
3P+E		380-415V		9h	**318.1648H** 10/40
		200-250V			**318.1644H** 10/40
3P+N+E		380-415V		6h	**318.1646H** 10/40
		346-415V			**318.1647H** 10/40

Sockets with "SAFE-IN" safety device

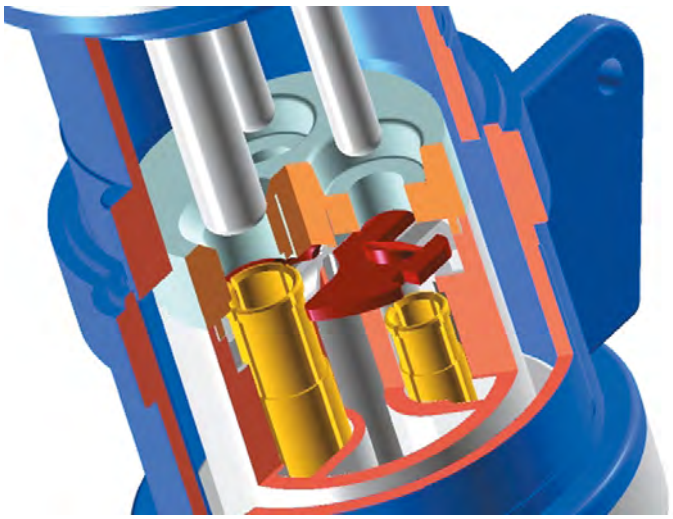

SAFE-IN
Connector tube protective shutter for increased safety against direct contacts. (The SAFE-IN safety device).

Terminals
Screw terminals

Terminals
Mantle terminals (EASY-PLUG)

OPTIMA-HD Series >> Connectors [HEAVY DUTY]

						OPTIMA-HD Series	
						318.	
						Screw terminals	
						CONNECTOR IP66/IP67/IP69 CABLE GLAND	
Current	**Poles**	**Hz**	**Volt**	**Colour**	**h**		
16A	2P+E	50Hz 60Hz	200-250V		6h	**318.1643.KX**	10/40
	3P+E		380-415V			**318.1646.KX**	10/40
	3P+N+E		346-415V			**318.1647.KX**	10/40
32A	2P+E		200-250V			**318.3243.KX**	10/40
	3P+E		380-415V			**318.3246.KX**	10/40
			380V 50Hz / 440V 60Hz		3h	**318.32464.KX**	1/12
	3P+N+E		346-415V		6h	**318.3247.KX**	10/40
63A	2P+E		200-250V			**318.6343.KX**	6/24
	3P+E		380-415V			**318.6346.KX**	6/24
	3P+N+E		346-415V			**318.6347.KX**	6/24
125A	2P+E		200-250V			**318.12543.KX**	1/8
	3P+E		380-415V			**318.12546.KX**	1/8
	3P+N+E		346-415V			**318.12547.KX**	1/8

HD High impact resistance

\- High heat and fire resistance

CONVENTIONAL WIRING
Cage clamp connectors

Connectors and sockets for industrial applications

Connectors - IP66/IP67/IP69

EUREKA Series >> Connectors

Screw terminals [Angled outlet]

Poles	Hz	Volt	Colour	h	EUREKA Series 326. CONNECTOR IP66/IP67 CABLE GLAND 16A		32A	
2P+E	50Hz 60Hz	100-130V		4h	**326.1640**	10/100	**326.3240**	10/40
		200-250V		6h	**326.1643**	10/100	**326.3243**	10/40
3P+E		380-415V			**326.1646**	10/100	**326.3246**	10/40
		380V 50Hz / 440V 60Hz		3h			**326.32464**	10/40
3P+N+E		346-415V		6h	**326.1647**	10/50	**326.3247**	10/40

Terminals
Screw terminals

Terminals
Mantle terminals (EASY-PLUG)

OPTIMA Series >> Flush mounting socket outlets

OPTIMA Series

413.

Screw terminals [Angled outlet]

Mantle terminals [Angled outlet]

					FLUSH-MOUNTING SOCKET IP44/IP54					
					70x87mm		84x106mm		100x110mm	
Poles	**Hz**	**Volt**	**Colour**	**h**	16A		32A		63A	
2P+E	50Hz 60Hz	100-130V		4h	**413.1660**	10/100	**413.3260**	10/50	**413.6360**	
		200-250V		6h	**413.1663**	10/100	**413.3263**	10/50	**413.6363**	6/30
		380-415V		9h	**413.1668**	10/100	**413.3268**	10/50	**413.6368**	
		480-500V		7h	**413.16636**	10/100	**413.32636**	10/50	**413.63636**	
		TST>50V		12h	**413.16633**	10/100	**413.32633**	10/50	**413.63633**	
	>300-500Hz	>50V		2h	**413.16632**	10/100	**413.32632**	10/50	**413.63632**	
	DC	>50-250V		3h	**413.16634**	10/100	**413.32634**	10/50	**413.63634**	
		>250V		8h	**413.16638**	10/100	**413.32638**	10/50	**413.63638**	
3P+E	50Hz 60Hz	100-130V		4h	**413.1661**	10/100	**413.3261**	10/50	**413.6361**	
		200-250V		9h	**413.1664**	10/100	**413.3264**	10/50	**413.6364**	6/30
		380-415V		6h	**413.1666**	10/100	**413.3266**	10/50	**413.6366**	6/30
		380V 50Hz / 440V 60Hz		3h	**413.16664**	10/100	**413.32664**	10/50	**413.63664**	
		480-500V		7h	**413.16666**	10/100	**413.32666**	10/50	**413.63666**	
		600-690V		5h	**413.16667**	10/100	**413.32667**	10/50	**413.63667**	
	60Hz	440-460V		11h	**413.16665**	10/100	**413.32665**	10/50	**413.63665**	
	100-300Hz	>50V		10h	**413.16661**	10/100	**413.32661**	10/50	**413.63661**	
	>300-500Hz			2h	**413.16662**	10/100	**413.32662**	10/50	**413.63662**	
3P+N+E	50Hz 60Hz	100-130V		4h	**413.1662**	10/100	**413.3262**	10/50	**413.6362**	6/30
		208-250V		9h	**413.1665**	10/100	**413.3265**	10/50	**413.6365**	
		346-415V		6h	**413.1667**	10/100	**413.3267**	10/50	**413.6367**	6/30
		380V 50Hz / 440V 60Hz		3h	**413.16674**	10/100	**413.32674**	10/50	**413.63674**	
		480-500V		7h	**413.16676**	10/100	**413.32676**	10/50	**413.63676**	
		600-690V		5h	**413.16677**	10/100	**413.32677**	10/50	**413.63677**	
	60Hz	440-460V		11h	**413.16675**	10/100	**413.32675**	10/50	**413.63675**	
	>300-500Hz	>50V		2h	**413.16672**	10/100	**413.32672**	10/50	**413.63672**	

Connectors and sockets for industrial applications

Flush mounting socket outlets - IP44/IP54

OPTIMA Series >> Flush mounting socket outlets

Mantle terminals [Straight outlet]

Current	Poles	Hz	Volt	Colour	h	OPTIMA Series 423. FLUSH-MOUNTING SOCKET IP44/IP54 100x110mm
63A	2P+E	50Hz 60Hz	100-130V	yellow	4h	**423.6360**
			200-250V	blue	6h	**423.6363** 6/30
			380-415V	red	9h	**423.6368**
			480-500V	black	7h	**423.63636**
			TST>50V	grey	12h	**423.63633**
		>300-500Hz	>50V	green	2h	**423.63632**
		DC	>50-250V	grey	3h	**423.63634**
			>250V		8h	**423.63638**
	3P+E	50Hz 60Hz	100-130V	yellow	4h	**423.6361**
			200-250V	blue	9h	**423.6364**
			380-415V	red	6h	**423.6366** 6/30
			380V 50Hz / 440V 60Hz		3h	**423.63664**
			480-500V	black	7h	**423.63666**
			600-690V		5h	**423.63667**
		60Hz	440-460V	red	11h	**423.63665**
		100-300Hz	>50V	green	10h	**423.63661**
		>300-500Hz			2h	**423.63662**
	3P+N+E	50Hz 60Hz	100-130V	yellow	4h	**423.6362**
			208-250V	blue	9h	**423.6365**
			346-415V	red	6h	**423.6367** 6/30
			380V 50Hz / 440V 60Hz		3h	**423.63674**
			480-500V	black	7h	**423.63676**
			600-690V		5h	**423.63677**
		60Hz	440-460V	red	11h	**423.63675**
		>300-500Hz	>50V	green	2h	**423.63672**

Terminals
Mantle terminals (EASY-PLUG)

Terminals
Spring terminals (FAST WIRING)

OPTIMA Series >> Flush mounting socket outlets

					OPTIMA Series			
					413.			
					Spring terminals [Angled outlet]			
					FLUSH-MOUNTING SOCKET			
					IP44/IP54			
					70x87mm		84x106mm	
Poles	**Hz**	**Volt**	**Colour**	**h**	16A		32A	
2P+E	50Hz 60Hz	100-130V		4h	**413.1660F**	10/100	**413.3260F**	10/50
		200-250V		6h	**413.1663F**	10/100	**413.3263F**	10/50
		380-415V		9h	**413.1668F**	10/100	**413.3268F**	10/50
3P+E		200-250V			**413.1664F**	10/100	**413.3264F**	10/50
		380-415V		6h	**413.1666F**	10/100	**413.3266F**	10/50
3P+N+E		346-415V			**413.1667F**	10/100	**413.3267F**	10/50

FAST WIRING
Spring terminals

Connectors and sockets for industrial applications

Flush mounting socket outlets - IP44/IP54

OPTIMA Series >> Flush mounting sockets outlets [SAFE-IN]

					OPTIMA Series
					413.
					Screw terminals [Angled outlet]
					FLUSH-MOUNTING SOCKET
					IP44/IP54
					70x87mm
Poles	**Hz**	**Volt**	**Colour**	**h**	16A
2P+E	50Hz 60Hz	100-130V		4h	**413.1660H** 10/100
		200-250V		6h	**413.1663H** 10/100
3P+E		380-415V		9h	**413.1668H** 10/100
		200-250V			**413.1664H** 10/100
3P+N+E		380-415V		6h	**413.1666H** 10/100
		346-415V			**413.1667H** 10/100

Sockets with "SAFE-IN" safety device

THE "SAFE-IN" SAFETY DEVICE

The "SAFE-IN" safety device assembled on the 16A industrial sockets works like the protection installed on household sockets, i.e., by means of an appropriate shutter, it closes the input of the socket contact tubes and prevents accidental and voluntary contact of live parts of the socket with slim objects, such as screwdrivers or wires. This protection offers an additional safety guarantee, in addition to that already provided by the spring-loaded cover assembled on the mobile sockets.

Terminals
Screw terminals

EUREKA Series >> Flush / surface mounting socket outlets

Screw terminals [90° angled outlet]

					EUREKA Series			
					452.			
					SOCKET OUTLET			
					IP44			
					70x87mm			
					PG 16			
Poles	**Hz**	**Volt**	**Colour**	**h**	16A		32A	
2P+E	50Hz 60Hz	100-130V		4h	**452.1660**	10/100	**452.3260**	10/40
		200-250V		6h	**452.1663**	10/100	**452.3263**	10/40
		380-415V		9h	**452.1668**	10/100	**452.3268**	10/40
		480-500V		7h	**452.16636**		**452.32636**	
		TST>50V		12h	**452.16633**		**452.32633**	
	>300-500Hz	>50V		2h	**452.16632**		**452.32632**	
	DC	>50-250V		3h	**452.16634**		**452.32634**	10/40
		>250V		8h	**452.16638**		**452.32638**	
3P+E	50Hz 60Hz	100-130V		4h	**452.1661**	10/60	**452.3261**	10/40
		200-250V		9h	**452.1664**	10/60	**452.3264**	10/40
		380-415V		6h	**452.1666**	10/60	**452.3266**	10/40
		380V 50Hz / 440V 60Hz		3h	**452.16664**		**452.32664**	10/40
		480-500V		7h	**452.16666**		**452.32666**	
		600-690V		5h	**452.16667**		**452.32667**	
	60Hz	440-460V		11h	**452.16665**		**452.32665**	10/40
	100-300Hz	>50V		10h	**452.16661**	10/60	**452.32661**	
	>300-500Hz			2h	**452.16662**		**452.32662**	
3P+N+E	50Hz 60Hz	100-130V		4h	**452.1662**	10/60	**452.3262**	10/40
		208-250V		9h	**452.1665**	10/60	**452.3265**	10/40
		346-415V		6h	**452.1667**	10/60	**452.3267**	10/40
		380V 50Hz / 440V 60Hz		3h	**452.16674**		**452.32674**	10
		480-500V		7h	**452.16676**		**452.32676**	10
		600-690V		5h	**452.16677**		**452.32677**	10
	60Hz	440-460V		11h	**452.16675**		**452.32675**	10
	>300-500Hz	>50V		2h	**452.16672**	10/60	**452.32672**	10

Connectors and sockets for industrial applications

Flush mounting socket outlets - IP44/IP54

EUREKA Series >> Flush mounting socket outlets

EUREKA Series

422.

Screw terminals [Straight outlet] | **Screw terminals [Straight outlet]**

FLUSH-MOUNTING SOCKET

IP44

Poles	Hz	Volt	Colour	h	62x62mm 16A		75x75mm 16A		75x75mm 32A	
2P+E	50Hz 60Hz	100-130V		4h	**422.1660/R**	10/100	**422.1660**	10/100	**422.3260**	10/50
		200-250V		6h	**422.1663/R**	10/100	**422.1663**	10/100	**422.3263**	10/50
		380-415V		9h	**422.1668/R**	10/100	**422.1668**	10/100	**422.3268**	10/50
		480-500V		7h			**422.16636**	10/100	**422.32636**	10/50
		TST>50V		12h			**422.16633**	10/100	**422.32633**	10/50
	>300-500Hz	>50V		2h			**422.16632**	10/100	**422.32632**	10/50
	DC	>50-250V		3h			**422.16634**	10/100	**422.32634**	10/50
		>250V		8h			**422.16638**	10/100	**422.32638**	10/50
3P+E	50Hz 60Hz	100-130V		4h			**422.1661**	10/100	**422.3261**	10/50
		200-250V		9h			**422.1664**	10/100	**422.3264**	10/50
		380-415V		6h			**422.1666**	10/100	**422.3266**	10/50
		380V 50Hz / 440V 60Hz		3h			**422.16664**	10/100	**422.32664**	10/50
		480-500V		7h			**422.16666**	10/100	**422.32666**	10/50
		600-690V		5h			**422.16667**	10/100	**422.32667**	10/50
	60Hz	440-460V		11h			**422.16665**	10/100	**422.32665**	10/50
	100-300Hz	>50V		10h			**422.16661**	10/100	**422.32661**	10/50
	>300-500Hz			2h			**422.16662**	10/100	**422.32662**	10/50
3P+N+E	50Hz 60Hz	100-130V		4h			**422.1662**	10/100	**422.3262**	10/50
		208-250V		9h			**422.1665**	10/100	**422.3265**	10/50
		346-415V		6h			**422.1667**	10/100	**422.3267**	10/50
		380V 50Hz / 440V 60Hz		3h			**422.16674**	10/100	**422.32674**	10/50
		480-500V		7h			**422.16676**	10/100	**422.32676**	10/50
		600-690V		5h			**422.16677**	10/100	**422.32677**	10/50
	60Hz	440-460V		11h			**422.16675**	10/100	**422.32675**	10/50
	>300-500Hz	>50V		2h			**422.16672**	10/100	**422.32672**	10/50

Terminals
Screw terminals

OPTIMA Series >> Flush mounting socket outlets

OPTIMA Series

418.

Screw terminals [Angled outlet]

Poles	Hz	Volt	Colour	h	FLUSH-MOUNTING SOCKET IP66/IP67/IP69 70x87mm 16A		FLUSH-MOUNTING SOCKET IP66/IP67/IP69 84x106mm 32A	
2P+E	50Hz 60Hz	100-130V		4h	**418.1660**	10/100	**418.3260**	10/50
		200-250V		6h	**418.1663**	10/100	**418.3263**	10/50
		380-415V		9h	**418.1668**	10/100	**418.3268**	10/50
		480-500V		7h	**418.16636**	10/100	**418.32636**	10/50
		TST>50V		12h	**418.16633**	10/100	**418.32633**	10/50
	>300-500Hz	>50V		2h	**418.16632**	10/100	**418.32632**	10/50
	DC	>50-250V		3h	**418.16634**	10/100	**418.32634**	10/50
		>250V		8h	**418.16638**	10/100	**418.32638**	10/50
3P+E	50Hz 60Hz	100-130V		4h	**418.1661**	10/100	**418.3261**	10/50
		200-250V		9h	**418.1664**	10/100	**418.3264**	10/50
		380-415V		6h	**418.1666**	10/100	**418.3266**	10/50
		380V 50Hz / 440V 60Hz		3h	**418.16664**	10/100	**418.32664**	10/50
		480-500V		7h	**418.16666**	10/100	**418.32666**	10/50
		600-690V		5h	**418.16667**	10/100	**418.32667**	10/50
	60Hz	440-460V		11h	**418.16665**	10/100	**418.32665**	10/50
	100-300Hz	>50V		10h	**418.16661**	10/100	**418.32661**	10/50
	>300-500Hz			2h	**418.16662**	10/100	**418.32662**	10/50
3P+N+E	50Hz 60Hz	100-130V		4h	**418.1662**	10/100		
		208-250V		9h	**418.1665**	10/100	**418.3265**	10/50
		346-415V		6h	**418.1667**	10/100	**418.3267**	10/50
		380V 50Hz / 440V 60Hz		3h	**418.16674**	10/100	**418.32674**	10/50
		480-500V		7h	**418.16676**	10/100	**418.32676**	10/50
		600-690V		5h	**418.16677**	10/100	**418.32677**	10/50
	60Hz	440-460V		11h	**418.16675**	10/100	**418.32675**	10/50
	>300-500Hz	>50V		2h	**418.16672**	10/100	**418.32672**	10/50

Connectors and sockets for industrial applications

Flush mounting socket outlets - IP66/IP67/IP69

OPTIMA Series >> Flush mounting socket outlets

Mantle terminals [Angled outlet]

					OPTIMA Series 418.			
					FLUSH-MOUNTING SOCKET IP66/IP67/IP69			
					100x110mm		114x114mm	
Poles	**Hz**	**Volt**	**Colour**	**h**	63A		125A	
2P+E	50Hz 60Hz	100-130V		4h	**418.6360**	6/30	**418.12560**	1/10
		200-250V		6h	**418.6363**	6/30	**418.12563**	1/10
		380-415V		9h	**418.6368**	6/30	**418.12568**	1/10
		480-500V		7h	**418.63636**	6/30	**418.125636**	1/10
		TST>50V		12h	**418.63633**	6/30	**418.125633**	1/10
	>300-500Hz	>50V		2h	**418.63632**	6/30	**418.125632**	1/10
	DC	>50-250V		3h	**418.63634**	6/30	**418.125634**	1/10
		>250V		8h	**418.63638**	6/30	**418.125638**	1/10
3P+E	50Hz 60Hz	100-130V		4h	**418.6361**	6/30	**418.12561**	1/10
		200-250V		9h	**418.6364**	6/30	**418.12564**	1/10
		380-415V		6h	**418.6366**	6/30	**418.12566**	1/10
		380V 50Hz / 440V 60Hz		3h	**418.63664**	6/30	**418.125664**	1/10
		480-500V		7h	**418.63666**	6/30	**418.125666**	1/10
		600-690V		5h	**418.63667**	6/30	**418.125667**	1/10
	60Hz	440-460V		11h	**418.63665**	6/30	**418.125665**	1/10
	100-300Hz	>50V		10h	**418.63661**	6/30	**418.125661**	1/10
	>300-500Hz			2h	**418.63662**	6/30	**418.125662**	1/10
3P+N+E	50Hz 60Hz	100-130V		4h	**418.6362**	6/30	**418.12562**	1/10
		208-250V		9h	**418.6365**	6/30	**418.12565**	1/10
		346-415V		6h	**418.6367**	6/30	**418.12567**	1/10
		380V 50Hz / 440V 60Hz		3h	**418.63674**	6/30	**418.125674**	1/10
		480-500V		7h	**418.63676**	6/30	**418.125676**	1/10
		600-690V		5h	**418.63677**	6/30	**418.125677**	1/10
	60Hz	440-460V		11h	**418.63675**	6/30	**418.125675**	1/10
	>300-500Hz	>50V		2h	**418.63672**	6/30	**418.125672**	1/10

Terminals
Mantle terminals (EASY-PLUG)

OPTIMA Series >> Flush mounting socket outlets

OPTIMA Series

428.

Mantle terminals [Straight outlet]

Poles	Hz	Volt	Colour	h	FLUSH-MOUNTING SOCKET IP66/IP67/IP69 100x110mm 63A		FLUSH-MOUNTING SOCKET IP66/IP67/IP69 114x114mm 125A	
2P+E	50Hz 60Hz	100-130V		4h	**428.6360**	6/30	**428.12560**	1/10
		200-250V		6h	**428.6363**	6/30	**428.12563**	1/10
		380-415V		9h	**428.6368**	6/30	**428.12568**	1/10
		480-500V		7h	**428.63636**	6/30	**428.125636**	1/10
		TST>50V		12h	**428.63633**	6/30	**428.125633**	1/10
	>300-500Hz	>50V		2h	**428.63632**	6/30	**428.125632**	1/10
	DC	>50-250V		3h	**428.63634**	6/30	**428.125634**	1/10
		>250V		8h	**428.63638**	6/30	**428.125638**	1/10
3P+E	50Hz 60Hz	100-130V		4h	**428.6361**	6/30	**428.12561**	1/10
		200-250V		9h	**428.6364**	6/30	**428.12564**	1/10
		380-415V		6h	**428.6366**	6/30	**428.12566**	1/10
		380V 50Hz / 440V 60Hz		3h	**428.63664**	6/30	**428.125664**	1/10
		480-500V		7h	**428.63666**	6/30	**428.125666**	1/10
		600-690V		5h	**428.63667**	6/30	**428.125667**	1/10
	60Hz	440-460V		11h	**428.63665**	6/30	**428.125665**	1/10
	100-300Hz	>50V		10h	**428.63661**	6/30	**428.125661**	1/10
	>300-500Hz			2h	**428.63662**	6/30	**428.125662**	1/10
3P+N+E	50Hz 60Hz	100-130V		4h	**428.6362**	6/30	**428.12562**	1/10
		208-250V		9h	**428.6365**	6/30	**428.12565**	1/10
		346-415V		6h	**428.6367**	6/30	**428.12567**	1/10
		380V 50Hz / 440V 60Hz		3h	**428.63674**	6/30	**428.125674**	1/10
		480-500V		7h	**428.63676**	6/30	**428.125676**	1/10
		600-690V		5h	**428.63677**	6/30	**428.125677**	1/10
	60Hz	440-460V		11h	**428.63675**	6/30	**428.125675**	1/10
	>300-500Hz	>50V		2h	**428.63672**	6/30	**428.125672**	1/10

Connectors and sockets for industrial applications

Flush mounting socket outlets - IP66/IP67/IP69

OPTIMA Series >> Flush mounting socket outlets

					OPTIMA Series	
					418.	
					Spring terminals [Angled outlet]	
					FLUSH-MOUNTING SOCKET IP66/IP67/IP69	
					70x87mm	84x106mm
Poles	**Hz**	**Volt**	**Colour**	**h**	16A	32A
2P+E	50Hz 60Hz	100-130V		4h	**418.1660F** 10/100	**418.3260F** 10/50
		200-250V		6h	**418.1663F** 10/100	**418.3263F** 10/50
3P+E		380-415V		9h	**418.1668F** 10/100	**418.3268F** 10/50
		200-250V			**418.1664F** 10/100	**418.3264F** 10/50
3P+N+E		380-415V		6h	**418.1666F** 10/100	**418.3266F** 10/50
		346-415V			**418.1667F** 10/100	**418.3267F** 10/50

Terminals
Spring terminals (FAST WIRING)

Terminals
Screw terminals

OPTIMA Series >> Flush mounting sockets outlets [SAFE-IN]

Poles	Hz	Volt	Colour	h	OPTIMA Series 418.	
					Screw terminals [Angled outlet]	
					FLUSH-MOUNTING SOCKET	
					IP66/IP67/IP69	
					70x87mm	
					16A	
2P+E	50Hz 60Hz	100-130V		4h	**418.1660H**	10/100
		200-250V		6h	**418.1663H**	10/100
3P+E		380-415V		9h	**418.1668H**	10/100
		200-250V			**418.1664H**	10/100
3P+N+E		380-415V		6h	**418.1666H**	10/100
		346-415V			**418.1667H**	10/100

Sockets with "SAFE-IN" safety device

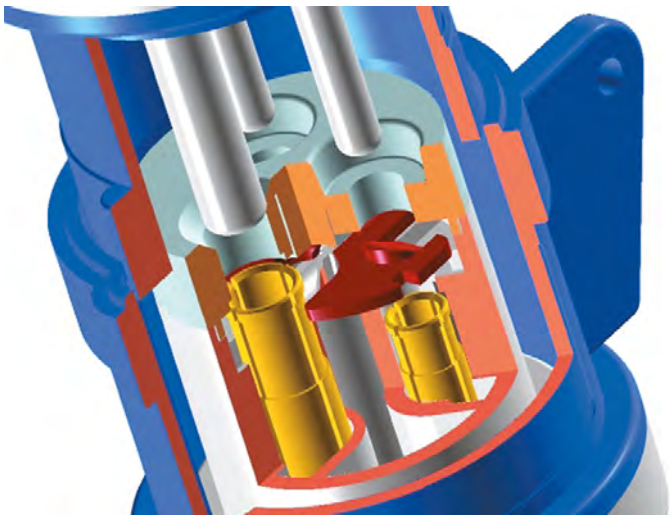

SAFE-IN
Connector tube protective shutter for increased safety against direct contacts. (The SAFE-IN safety device).

Connectors and sockets for industrial applications

Flush mounting socket outlets - IP66/IP67/IP69

EUREKA Series >> Flush / surface mounting socket outlets

Screw terminals [90° angled outlet]

					EUREKA Series			
					457.			
					SOCKET OUTLET			
					IP66/IP67			
					70x87mm			
					PG 16			
Poles	**Hz**	**Volt**	**Colour**	**h**	16A		32A	
2P+E	50Hz 60Hz	100-130V		4h	**457.1660**	10/60	**457.3260**	10/40
		200-250V		6h	**457.1663**	10/60	**457.3263**	10/40
		380-415V		9h	**457.1668**	10/60	**457.3268**	10/40
		480-500V		7h	**457.16636**		**457.32636**	10/40
		TST>50V		12h	**457.16633**		**457.32633**	
	>300-500Hz	>50V		2h	**457.16632**		**457.32632**	
	DC	>50-250V		3h	**457.16634**		**457.32634**	10/40
		>250V		8h	**457.16638**		**457.32638**	
3P+E	50Hz 60Hz	100-130V		4h	**457.1661**	10/50	**457.3261**	10/40
		200-250V		9h	**457.1664**	10/50	**457.3264**	10/40
		380-415V		6h	**457.1666**	10/50	**457.3266**	10/40
		380V 50Hz / 440V 60Hz		3h	**457.16664**		**457.32664**	10/40
		480-500V		7h	**457.16666**	10/50	**457.32666**	10/40
		600-690V		5h	**457.16667**		**457.32667**	
	60Hz	440-460V		11h	**457.16665**		**457.32665**	
	100-300Hz	>50V		10h	**457.16661**	10/50	**457.32661**	
	>300-500Hz			2h	**457.16662**		**457.32662**	
3P+N+E	50Hz 60Hz	100-130V		4h	**457.1662**	10/50	**457.3262**	10/40
		208-250V		9h	**457.1665**	10/50	**457.3265**	10/40
		346-415V		6h	**457.1667**	10/50	**457.3267**	10/40
		380V 50Hz / 440V 60Hz		3h	**457.16674**	10/50	**457.32674**	10/40
		480-500V		7h	**457.16676**		**457.32676**	10
		600-690V		5h	**457.16677**		**457.32677**	10/40
	60Hz	440-460V		11h	**457.16675**		**457.32675**	10/40
	>300-500Hz	>50V		2h	**457.16672**		**457.32672**	10

Terminals
Screw terminals

EUREKA Series >> Flush mounting socket outlets

EUREKA Series

427.

Screw terminals [Straight outlet]

FLUSH-MOUNTING SOCKET
IP66/IP67
75x75mm

Poles	Hz	Volt	Colour	h	16A		32A	
2P+E	50Hz 60Hz	100-130V		4h	**427.1660**	10/100	**427.3260**	10/50
		200-250V		6h	**427.1663**	10/100	**427.3263**	10/50
		380-415V		9h	**427.1668**	10/100	**427.3268**	10/50
		480-500V		7h	**427.16636**	10/100	**427.32636**	10/50
		TST>50V		12h	**427.16633**	10/100	**427.32633**	10/50
	>300-500Hz	>50V		2h	**427.16632**	10/100	**427.32632**	10/50
	DC	>50-250V		3h	**427.16634**	10/100	**427.32634**	10/50
		>250V		8h	**427.16638**	10/100	**427.32638**	10/50
3P+E	50Hz 60Hz	100-130V		4h	**427.1661**	10/100	**427.3261**	10/50
		200-250V		9h	**427.1664**	10/100	**427.3264**	10/50
		380-415V		6h	**427.1666**	10/100	**427.3266**	10/50
		380V 50Hz / 440V 60Hz		3h	**427.16664**	10/100	**427.32664**	10/50
		480-500V		7h	**427.16666**	10/100	**427.32666**	10/50
		600-690V		5h	**427.16667**	10/100	**427.32667**	10/50
	60Hz	440-460V		11h	**427.16665**	10/100	**427.32665**	10/50
	100-300Hz	>50V		10h	**427.16661**	10/100	**427.32661**	10/50
	>300-500Hz			2h	**427.16662**	10/100	**427.32662**	10/50
3P+N+E	50Hz 60Hz	100-130V		4h	**427.1662**	10/100	**427.3262**	10/50
		208-250V		9h	**427.1665**	10/100	**427.3265**	10/50
		346-415V		6h	**427.1667**	10/100	**427.3267**	10/50
		380V 50Hz / 440V 60Hz		3h	**427.16674**	10/100	**427.32674**	10/50
		480-500V		7h	**427.16676**	10/100	**427.32676**	10/50
		600-690V		5h	**427.16677**	10/100	**427.32677**	10/50
	60Hz	440-460V		11h	**427.16675**	10/100	**427.32675**	10/50
	>300-500Hz	>50V		2h	**427.16672**	10/100	**427.32672**	10/50

Connectors and sockets for industrial applications

Surface mounting socket outlets - IP44/IP54

OPTIMA Series >> Surface mounting socket outlets

OPTIMA-BASE Series

513.

BASE - Screw terminals

					SURFACE MOUNTING SOCKET IP44/IP54					
					M20X1,5		M25X1,5		M32X1,5	
Poles	**Hz**	**Volt**	**Colour**	**h**	16A				32A	
2P+E	50Hz 60Hz	100-130V		4h	**513.1650**	10/40			**513.3250**	10
		200-250V			**513.1653**	10/40			**513.3253**	10
3P+E		380-415V		6h			**513.1656**	10/40	**513.3256**	10
3P+N+E		346-415V					**513.1657**	10/40	**513.3257**	10

- Open threaded cable entry
- Threaded cap/cable sleeve included

Terminals
Screw terminals

OPTIMA Series >> Surface mounting socket outlets

OPTIMA-TOP Series

513.

TOP - Screw terminals

					SURFACE MOUNTING SOCKET IP44					
					M20X1,5		M25X1,5		M32X1,5	
Poles	**Hz**	**Volt**	**Colour**	**h**	16A				32A	
2P+E	50Hz 60Hz	100-130V		4h	**513.1650T**	10/40			**513.3250T**	10
		200-250V		6h	**513.1653T**	10/40			**513.3253T**	10
		380-415V		9h	**513.1658T**	10/40			**513.3258T**	10
		480-500V		7h	**513.16536T**	10/40			**513.32536T**	10
		TST>50V		12h	**513.16533T**	10/40			**513.32533T**	10
	>300-500Hz	>50V		2h	**513.16532T**	10/40			**513.32532T**	10
	DC	>50-250V		3h	**513.16534T**	10/40			**513.32534T**	10
		>250V		8h	**513.16538T**	10/40			**513.32538T**	10
3P+E	50Hz 60Hz	100-130V		4h			**513.1651T**	10/40	**513.3251T**	10
		200-250V		9h			**513.1654T**	10/40	**513.3254T**	10
		380-415V		6h			**513.1656T**	10/40	**513.3256T**	10
		380V 50Hz / 440V 60Hz		3h			**513.16564T**	10/40	**513.32564T**	10
		480-500V		7h			**513.16566T**	10/40	**513.32566T**	10
		600-690V		5h			**513.16567T**	10/40	**513.32567T**	10
	60Hz	440-460V		11h			**513.16565T**	10/40	**513.32565T**	10
	100-300Hz	>50V		10h			**513.16561T**	10/40	**513.32561T**	10
	>300-500Hz			2h			**513.16562T**	10/40	**513.32562T**	10
3P+N+E	50Hz 60Hz	100-130V		4h			**513.1652T**	10/40	**513.3252T**	10
		208-250V		9h			**513.1655T**	10/40	**513.3255T**	10
		346-415V		6h			**513.1657T**	10/40	**513.3257T**	10
		380V 50Hz / 440V 60Hz		3h			**513.16574T**	10/40	**513.32574T**	10
		480-500V		7h			**513.16576T**	10/40	**513.32576T**	10
		600-690V		5h			**513.16577T**	10/40	**513.32577T**	10
	60Hz	440-460V		11h			**513.16575T**	10/40	**513.32575T**	10
	>300-500Hz	>50V		2h			**513.16572T**	10/40	**513.32572T**	10

- Threaded break-through knock out
- Rubber threaded cable sleeve included

Connectors and sockets for industrial applications

Surface mounting socket outlets - IP44/IP54

OPTIMA Series >> Surface mounting socket outlets

OPTIMA-TOP Series

513.

TOP - Spring terminals

					SURFACE MOUNTING SOCKET IP44/IP54					
					M20X1,5		M25X1,5		M32X1,5	
Poles	**Hz**	**Volt**	**Colour**	**h**	16A				32A	
2P+E	50Hz 60Hz	100-130V		4h	**513.1650TF**	10/40			**513.3250TF**	10
		200-250V		6h	**513.1653TF**	10/40			**513.3253TF**	10
		380-415V		9h	**513.1658TF**	10/40			**513.3258TF**	10
3P+E		200-250V					**513.1654TF**	10/40	**513.3254TF**	10
		380-415V		6h			**513.1656TF**	10/40	**513.3256TF**	10
3P+N+E		346-415V					**513.1657TF**	10/40	**513.3257TF**	10

- Threaded break-through knock out
- Rubber threaded cable sleeve included

Terminals
Spring terminals (FAST WIRING)

Terminals
Mantle terminals (EASY-PLUG)

OPTIMA Series >> Surface mounting socket outlets

					OPTIMA-TOP Series	
					513.	
					TOP - Mantle terminals	
					SURFACE MOUNTING SOCKET	
					IP44	
					M40X1,5	
Poles	**Hz**	**Volt**	**Colour**	**h**	63A	
2P+E	50Hz 60Hz	100-130V		4h	**513.6350T**	4
		200-250V		6h	**513.6353T**	4
		380-415V		9h	**513.6358T**	4
		480-500V		7h	**513.63536T**	
		TST>50V		12h	**513.63533T**	
	>300-500Hz	>50V		2h	**513.63532T**	
	DC	>50-250V		3h	**513.63534T**	
		>250V		8h	**513.63538T**	
3P+E	50Hz 60Hz	100-130V		4h	**513.6351T**	4
		200-250V		9h	**513.6354T**	4
		380-415V		6h	**513.6356T**	4
		380V 50Hz / 440V 60Hz		3h	**513.63564T**	
		480-500V		7h	**513.63566T**	
		600-690V		5h	**513.63567T**	
	60Hz	440-460V		11h	**513.63565T**	
	100-300Hz	>50V		10h	**513.63561T**	
	>300-500Hz			2h	**513.63562T**	
3P+N+E	50Hz 60Hz	100-130V		4h	**513.6352T**	4
		208-250V		9h	**513.6355T**	4
		346-415V		6h	**513.6357T**	4
		380V 50Hz / 440V 60Hz		3h	**513.63574T**	
		480-500V		7h	**513.63576T**	
		600-690V		5h	**513.63577T**	
	60Hz	440-460V		11h	**513.63575T**	
	>300-500Hz	>50V		2h	**513.63572T**	

- Open threaded cable entry
- Cable gland included

Connectors and sockets for industrial applications

Surface mounting socket outlets - IP44/IP54

OPTIMA Series >> Surface mounting socket outlets

OPTIMA-TOP Series

513.

TOP - Screw terminals [SAFE-IN]

SURFACE MOUNTING SOCKET

IP44/IP54

Poles	Hz	Volt	Colour	h	M20X1,5 16A		M25X1,5 16A	
2P+E	50Hz 60Hz	100-130V		4h	**513.1650TH**	10/40		
		200-250V		6h	**513.1653TH**	10/40		
		380-415V		9h	**513.1658TH**	10/40		
3P+E		200-250V					**513.1654TH**	10/40
		380-415V		6h			**513.1656TH**	10/40
3P+N+E		346-415V					**513.1657TH**	10/40

Sockets with "SAFE-IN" safety device

- Threaded break-through knock out
- Rubber threaded cable sleeve included

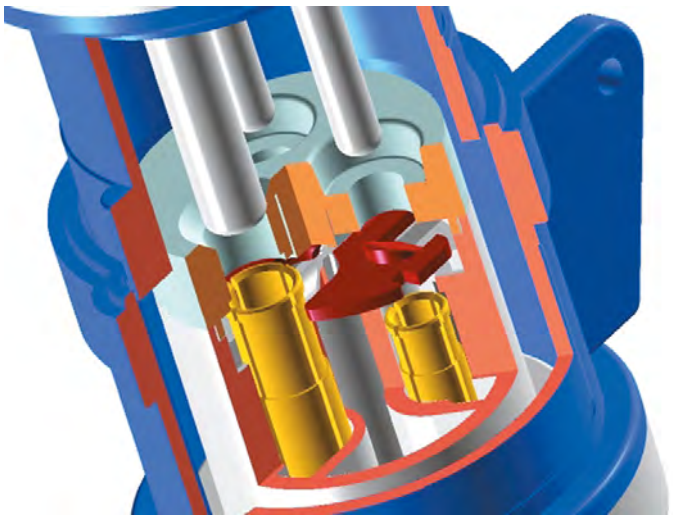

SAFE-IN
Connector tube protective shutter for increased safety against direct contacts. (The SAFE-IN safety device).

Terminals
Screw terminals

FRENCH STANDARD 16A
Shuttered socket

FRENCH-GERMAN STANDARD 16A
Shuttered socket

ITALIAN STANDARD P30 - 16A
Shuttered socket CEI 23-50

PLURISTANDARD P40 16A
Shuttered socket

BRITISH STANDARD 13A
Shuttered socket BS 1363-2

ARGENTINIAN STANDARD 10A
Unshuttered socket

BRAZILIAN STANDARD 10A
Unshuttered socket ABNT NBR 14136:2002

OPTIMA Series >> Surface mounting socket outlets

OPTIMA-COMBI Series

513.

COMBI - Screw terminals

SURFACE MOUNTING SOCKET
IP44/IP54
M32X1,5

Poles	Hz	Volt	Colour	h	Version	16A		32A	
2P+E	50Hz 60Hz	200-250V		6h	FRENCH	**513.1653-FN**	10	**513.3253-FF** [1]	10
					GERMAN	**513.1653-DN**	10	**513.3253-DF** [1]	10
					ITALIAN P30	**513.1653-PN**	10	**513.3253-PF** [1]	10
					ITALIAN P40	**513.1653-LN**	10	**513.3253-LF** [1]	10
					BRITISH BS1363	**513.1653-BN** [1]	10	**513.3253-BF** [1]	10
					ARGENTINE	**513.1653-AF** [1]	10	**513.3253-AF** [1]	10
					BRAZILIAN	**513.1653-CF** [1]	10	**513.3253-CF** [1]	10
					DANISH	**513.1653-KN**	10	**513.3253-KF** [1]	10
3P+E		380-415V			FRENCH	**513.1656-FN**	10	**513.3256-FF** [1]	10
					GERMAN	**513.1656-DN**	10	**513.3256-DF** [1]	10
					ITALIAN P30	**513.1656-PN**	10	**513.3256-PF** [1]	10
					ITALIAN P40	**513.1656-LN**	10	**513.3256-LF** [1]	10
					BRITISH BS1363	**513.1656-BN** [1]	10	**513.3256-BF** [1]	10
					ARGENTINE	**513.1656-AF** [1]	10	**513.3256-AF** [1]	10
					BRAZILIAN	**513.1656-CF** [1]	10	**513.3256-CF** [1]	10
					DANISH	**513.1656-KN**	10	**513.3256-KF** [1]	10
3P+N+E		346-415V			FRENCH	**513.1657-FN**	10	**513.3257-FF** [1]	10
					GERMAN	**513.1657-DN**	10	**513.3257-DF** [1]	10
					ITALIAN P30	**513.1657-PN**	10	**513.3257-PF** [1]	10
					ITALIAN P40	**513.1657-LN**	10	**513.3257-LF** [1]	10
					BRITISH BS1363	**513.1657-BN** [1]	10	**513.3257-BF** [1]	10
					ARGENTINE	**513.1657-AF** [1]	10	**513.3257-AF** [1]	10
					BRAZILIAN	**513.1657-CF** [1]	10	**513.3257-CF** [1]	10
					DANISH	**513.1657-KN**	10	**513.3257-KF** [1]	10

[1] Household socket protected by 10A fuse [time-delay] (included)

- Open threaded cable entry
- Rubber threaded cable sleeve included
- COMBI version: combining industrial and household sockets

DANISH STANDARD
Shuttered socket

Connectors and sockets for industrial applications

Surface mounting socket outlets - IP44/IP54

OPTIMA Series >> Surface mounting socket outlets

OPTIMA Series

512.

Screw terminals [Angled box]

					SURFACE MOUNTING SOCKET IP44/IP54		
					M20X1,5	M25X1,5	M32X1,5
Poles	**Hz**	**Volt**	**Colour**	**h**	16A		32A
2P+E	50Hz 60Hz	100-130V		4h	**512.1650** 10/50		**512.3250** 10/40
		200-250V		6h	**512.1653** 10/50		**512.3253** 10/40
		380-415V		9h	**512.1658** 10/50		**512.3258** 10/40
3P+E		100-130V		4h		**512.1651** 10/50	**512.3251** 10/40
		200-250V		9h		**512.1654** 10/50	**512.3254** 10/40
		380-415V		6h		**512.1656** 10/50	**512.3256** 10/40
3P+N+E		100-130V		4h		**512.1652** 10/50	**512.3252** 10/40
		208-250V		9h		**512.1655** 10/50	**512.3255** 10/40
		346-415V		6h		**512.1657** 10/50	**512.3257** 10/40

- Open threaded cable entry
- Threaded cap/cable sleeve included

Terminals
Screw terminals

OPTIMA Series >> Surface mounting socket outlets

OPTIMA Series

522.

Screw terminals [Straight box]

SURFACE MOUNTING SOCKET

IP44/IP54

DRILLING POINT MARK

Poles	Hz	Volt	Colour	h	16A		32A	
2P+E	50Hz 60Hz	100-130V		4h	**522.1650**	10/50	**522.3250**	10/40
		200-250V		6h	**522.1653**	10/50	**522.3253**	10/40
		380-415V		9h	**522.1658**	10/50	**522.3258**	10/40
3P+E		100-130V		4h	**522.1651**	10/50	**522.3251**	10/40
		200-250V		9h	**522.1654**	10/50	**522.3254**	10/40
		380-415V		6h	**522.1656**	10/50	**522.3256**	10/40
3P+N+E		100-130V		4h	**522.1652**	10/50	**522.3252**	10/40
		208-250V		9h	**522.1655**	10/50	**522.3255**	10/40
		346-415V		6h	**522.1657**	10/50	**522.3257**	10/40

- Blank side with drilling point mark
- Rubber cable sleeve included

Connectors and sockets for industrial applications

Surface mounting socket outlets - IP66/IP67/IP69

OPTIMA Series >> Surface mounting socket outlets

OPTIMA-TOP Series

518.

TOP - Screw terminals

					SURFACE MOUNTING SOCKET IP66/IP67/IP69		
					M20X1,5	M25X1,5	M32X1,5
Poles	**Hz**	**Volt**	**Colour**	**h**	16A		32A
2P+E	50Hz 60Hz	100-130V		4h	**518.1650T** 10/40		**518.3250T** 10
		200-250V		6h	**518.1653T** 10/40		**518.3253T** 10
		380-415V		9h	**518.1658T** 10/40		**518.3258T** 10
		480-500V		7h	**518.16536T** 10/40		**518.32536T** 10
		TST>50V		12h	**518.16533T** 10/40		**518.32533T** 10
	>300-500Hz	>50V		2h	**518.16532T** 10/40		**518.32532T** 10
	DC	>50-250V		3h	**518.16534T** 10/40		**518.32534T** 10
		>250V		8h	**518.16538T** 10/40		**518.32538T** 10
3P+E	50Hz 60Hz	100-130V		4h		**518.1651T** 10/40	**518.3251T** 10
		200-250V		9h		**518.1654T** 10/40	**518.3254T** 10
		380-415V		6h		**518.1656T** 10/40	**518.3256T** 10
		380V 50Hz / 440V 60Hz		3h		**518.16564T** 10/40	**518.32564T** 10
		480-500V		7h		**518.16566T** 10/40	**518.32566T** 10
		600-690V		5h		**518.16567T** 10/40	**518.32567T** 10
	60Hz	440-460V		11h		**518.16565T** 10/40	**518.32565T** 10
	100-300Hz	>50V		10h		**518.16561T** 10/40	**518.32561T** 10
	>300-500Hz			2h		**518.16562T** 10/40	**518.32562T** 10
3P+N+E	50Hz 60Hz	100-130V		4h		**518.1652T** 10/40	**518.3252T** 10
		208-250V		9h		**518.1655T** 10/40	**518.3255T** 10
		346-415V		6h		**518.1657T** 10/40	**518.3257T** 10
		380V 50Hz / 440V 60Hz		3h		**518.16574T** 10/40	**518.32574T** 10
		480-500V		7h		**518.16576T** 10/40	**518.32576T** 10
		600-690V		5h		**518.16577T** 10/40	**518.32577T** 10
	60Hz	440-460V		11h		**518.16575T** 10/40	**518.32575T** 10
	>300-500Hz	>50V		2h		**518.16572T** 10/40	**518.32572T** 10

- Threaded break-through knock out

Terminals
Screw terminals

Terminals
Spring terminals (FAST WIRING)

OPTIMA Series >> Surface mounting socket outlets

OPTIMA-TOP Series

518.

TOP - Spring terminals

					SURFACE MOUNTING SOCKET IP66/IP67/IP69					
					M20X1,5		M25X1,5		M32X1,5	
Poles	**Hz**	**Volt**	**Colour**	**h**	16A				32A	
2P+E	50Hz 60Hz	100-130V		4h	**518.1650TF**	10/40			**518.3250TF**	10
		200-250V		6h	**518.1653TF**	10/40			**518.3253TF**	10
		380-415V		9h	**518.1658TF**	10/40			**518.3258TF**	10
3P+E		200-250V					**518.1654TF**	10/40	**518.3254TF**	10
		380-415V		6h			**518.1656TF**	10/40	**518.3256TF**	10
		380V 50Hz / 440V 60Hz		3h					**518.32564TF**	10
3P+N+E		346-415V		6h			**518.1657TF**	10/40	**518.3257TF**	10

- Threaded break-through knock out

Connectors and sockets for industrial applications

Surface mounting socket outlets - IP66/IP67/IP69

OPTIMA Series >> Surface mounting socket outlets

OPTIMA-TOP Series

518.

TOP - Mantle terminals

					SURFACE MOUNTING SOCKET IP66/IP67/IP69			
					M40X1,5		M63X1,5	
Poles	**Hz**	**Volt**	**Colour**	**h**	63A		125A	
2P+E	50Hz 60Hz	100-130V		4h	**518.6350T**	4	**518.12550T**	1/4
		200-250V		6h	**518.6353T**	4	**518.12553T**	1/4
		380-415V		9h	**518.6358T**	4	**518.12558T**	1/4
		480-500V		7h	**518.63536T**		**518.125536T**	
		TST>50V		12h	**518.63533T**		**518.125533T**	
	>300-500Hz	>50V		2h	**518.63532T**		**518.125532T**	
	DC	>50-250V		3h	**518.63534T**		**518.125534T**	
		>250V		8h	**518.63538T**		**518.125538T**	
3P+E	50Hz 60Hz	100-130V		4h	**518.6351T**	4	**518.12551T**	1/4
		200-250V		9h	**518.6354T**	4	**518.12554T**	1/4
		380-415V		6h	**518.6356T**	4	**518.12556T**	1/4
		380V 50Hz / 440V 60Hz		3h	**518.63564T**		**518.125564T**	
		480-500V		7h	**518.63566T**		**518.125566T**	
		600-690V		5h	**518.63567T**		**518.125567T**	
	60Hz	440-460V		11h	**518.63565T**		**518.125565T**	
	100-300Hz	>50V		10h	**518.63561T**		**518.125561T**	
	>300-500Hz			2h	**518.63562T**		**518.125562T**	
3P+N+E	50Hz 60Hz	100-130V		4h	**518.6352T**	4	**518.12552T**	1/4
		208-250V		9h	**518.6355T**	4	**518.12555T**	1/4
		346-415V		6h	**518.6357T**	4	**518.12557T**	1/4
		380V 50Hz / 440V 60Hz		3h	**518.63574T**		**518.125574T**	
		480-500V		7h	**518.63576T**		**518.125576T**	
		600-690V		5h	**518.63577T**		**518.125577T**	
	60Hz	440-460V		11h	**518.63575T**		**518.125575T**	
	>300-500Hz	>50V		2h	**518.63572T**		**518.125572T**	

- Open threaded cable entry
- Cable gland included

Terminals
Mantle terminals (EASY-PLUG)

Terminals
Screw terminals

OPTIMA Series >> Surface mounting socket outlets

					OPTIMA-TOP Series	
					518.	
					TOP - Screw terminals [SAFE-IN]	
					SURFACE MOUNTING SOCKET	
					IP66/IP67/IP69	
					M20X1,5	M25X1,5
Poles	**Hz**	**Volt**	**Colour**	**h**	16A	
2P+E	50Hz 60Hz	100-130V		4h	**518.1650TH** 10/40	
		200-250V		6h	**518.1653TH** 10/40	
		380-415V		9h	**518.1658TH** 10/40	
3P+E		200-250V				**518.1654TH** 10/40
		380-415V		6h		**518.1656TH** 10/40
3P+N+E		346-415V				**518.1657TH** 10/40

Sockets with "SAFE-IN" safety device

- Threaded break-through knock out

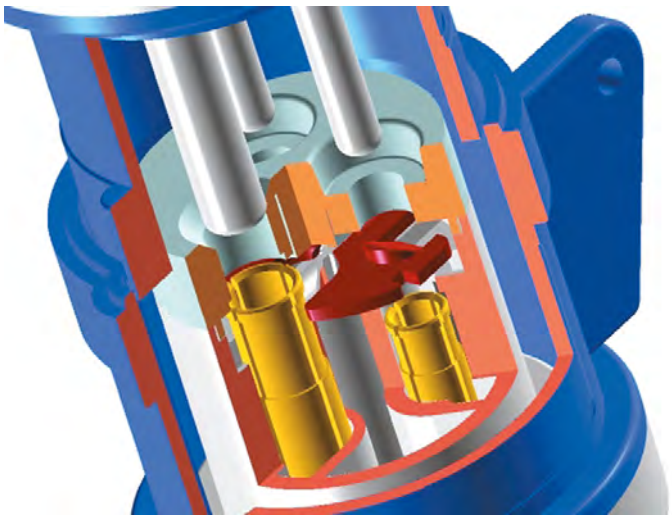

SAFE-IN
Connector tube protective shutter for increased safety against direct contacts. (The SAFE-IN safety device).

Connectors and sockets for industrial applications

Surface mounting socket outlets - IP66/IP67/IP69

OPTIMA Series >> Surface mounting socket outlets

OPTIMA Series

517.

Screw terminals [Angled box]

					SURFACE MOUNTING SOCKET IP66/IP67/IP69					
					M20X1,5		M25X1,5		M32X1,5	
Poles	**Hz**	**Volt**	**Colour**	**h**	16A				32A	
2P+E	50Hz 60Hz	100-130V		4h	**517.1650**	10/50			**517.3250**	10/40
		200-250V		6h	**517.1653**	10/50			**517.3253**	10/40
		380-415V		9h	**517.1658**	10/50			**517.3258**	10/40
3P+E		100-130V		4h			**517.1651**	10/50	**517.3251**	10/40
		200-250V		9h			**517.1654**	10/50	**517.3254**	10/40
		380-415V		6h			**517.1656**	10/50	**517.3256**	10/40
		380V 50Hz / 440V 60Hz		3h					**517.32564**	10/40
3P+N+E		100-130V		4h			**517.1652**	10/40	**517.3252**	10/40
		208-250V		9h			**517.1655**	10/40	**517.3255**	10/40
		346-415V		6h			**517.1657**	10/40	**517.3257**	10/40

- Open threaded cable entry
- Threaded cap/cable sleeve included

Terminals
Screw terminals

OPTIMA Series >> Surface mounting socket outlets

OPTIMA Series

527.

Screw terminals [Straight box]

SURFACE MOUNTING SOCKET
IP66/IP67/IP69
DRILLING POINT MARK

Poles	Hz	Volt	Colour	h	16A		32A	
2P+E	50Hz 60Hz	100-130V		4h	**527.1650**	10/50	**527.3250**	10/40
		200-250V		6h	**527.1653**	10/50	**527.3253**	10/40
		380-415V		9h	**527.1658**	10/50	**527.3258**	10/40
3P+E		100-130V		4h	**527.1651**	10/50	**527.3251**	10/40
		200-250V		9h	**527.1654**	10/50	**527.3254**	10/40
		380-415V		6h	**527.1656**	10/50	**527.3256**	10/40
3P+N+E		100-130V		4h	**527.1652**	10/50	**527.3252**	10/40
		208-250V		9h	**527.1655**	10/50	**527.3255**	10/40
		346-415V		6h	**527.1657**	10/50	**527.3257**	10/40

- Blank side with drilling point mark

Connectors and sockets for industrial applications

Surface mounting switched socket outlets without interlock - IP44/IP54

OPTIMA Series >> Surface mounting socket outlets

OPTIMA-TOP Series

513.

TOP SWITCH - Screw terminals

SURFACE MOUNTING SOCKET

IP44/IP54

Poles	Hz	Volt	Colour	h	M25X1,5 16A		M25X1,5 32A		M32X1,5 32A	
2P+E		200-250V			**513.1653TS** [1] [2]	10	**513.3253TS.A** [1] [2]	10	**513.3253TS** [3]	10
3P+E	50Hz 60Hz	380-415V		6h	**513.1656TS** [1] [2]	10	**513.3256TS.A** [1] [2]	10	**513.3256TS** [3]	10
3P+N+E		346-415V			**513.1657TS** [1] [2]	10	**513.3257TS.A** [1] [2]	10	**513.3257TS** [3]	10

[1] Open threaded cable entry
[2] Threaded cap/cable sleeve included
[3] Threaded break-through knock out

Terminals
Screw terminals

FRENCH STANDARD 16A
Shuttered socket

ARGENTINIAN STANDARD 10A
Unshuttered socket

OPTIMA Series >> Surface mounting socket outlets

OPTIMA-COMBI Series

513.

COMBI SWITCH - Screw terminals

SURFACE MOUNTING SOCKET

IP44/IP54

M32X1,5

Poles	Hz	Volt	Colour	h	Version	no.	16A		32A	
2P+E	50Hz 60Hz	200-250V		6h	FRENCH	1	**513.1653-1FNS**	8	**513.3253-1FFS** [1]	8
					ARGENTINE	2	**513.1653-2FNS**	8	**513.3253-2FFS** [1]	8
							513.1653-2AFS [1]	8	**513.3253-2AFS** [1]	8
3P+E		380-415V			FRENCH	1	**513.1656-1FNS**	8	**513.3256-1FFS** [1]	8
					ARGENTINE	2	**513.1656-2FNS**	8	**513.3256-2FFS** [1]	8
							513.1656-2AFS [1]	8	**513.3256-2AFS** [1]	8
3P+N+E		346-415V			FRENCH	1	**513.1657-1FNS**	8	**513.3257-1FFS** [1]	8
					ARGENTINE	2	**513.1657-2FNS**	8	**513.3257-2FFS** [1]	8
							513.1657-2AFS [1]	8	**513.3257-2AFS** [1]	8

[1] Household socket protected by 10A fuse [time-delay] (included)

- Open threaded cable entry
- Rubber threaded cable sleeve included
- COMBI version: combining industrial and household sockets

Connectors and sockets for industrial applications

Surface mounting switched socket outlets without interlock - IP44/IP54

OPTIMA Series >> Surface mounting socket outlets

OPTIMA-COMBI Series

513.

COMBI REVERSE L-0-R - Screw terminals

SURFACE MOUNTING SOCKET

IP44/IP54

M32X1,5

Poles	Hz	Volt	Colour	h	Version	no.	16A		32A	
3P+E	50Hz 60Hz	380-415V		6h	FRENCH	1	**513.1656-1FNR**	8	**513.3256-1FFR** [1]	8
						2	**513.1656-2FNR**	8	**513.3256-2FFR** [1]	8
3P+N+E		346-415V				1	**513.1657-1FNR**	8	**513.3257-1FFR** [1]	8
						2	**513.1657-2FNR**	8	**513.3257-2FFR** [1]	8

[1] Household socket protected by 10A fuse [time-delay] (included)

- Open threaded cable entry
- Rubber threaded cable sleeve included
- REVERSE L-0-R: With phase reversing switch
- COMBI version: combining industrial and household sockets

FRENCH STANDARD 16A
Shuttered socket

Terminals
Screw terminals

OPTIMA Series >> Surface mounting socket outlets

OPTIMA-TOP Series

518.

TOP SWITCH - Screw terminals

SURFACE MOUNTING SOCKET

IP66/IP67/IP69

Poles	Hz	Volt	Colour	h	M25X1,5 16A		M25X1,5 32A		M32X1,5	
2P+E	50Hz 60Hz	200-250V		6h	**518.1653TS** [1] [2]	10	**518.3253TS.A** [1] [2]	10	**518.3253TS** [3]	10
3P+E		380-415V			**518.1656TS** [1] [2]	10	**518.3256TS.A** [1] [2]	10	**518.3256TS** [3]	10
3P+N+E		346-415V			**518.1657TS** [1] [2]	10	**518.3257TS.A** [1] [2]	10	**518.3257TS** [3]	10

[1] Open threaded cable entry

[2] Threaded cap/cable sleeve included

[3] Threaded break-through knock out

Connectors and sockets for industrial applications

Domestic standard socket for industrial applications - IP54

DOMO Series >> Flush mounting

50x60mm

70x87mm

70x87mm

					DOMO Series 570.					
					FLUSH-MOUNTING SOCKET				SURFACE MOUNTING SOCKET	
					50x60mm		70x87mm			
					IP54					
Current	**Poles**	**Volt**	**Version**	**Colour**					DRILLING POINT MARK	
10A			ARGENTINE		**570.2093**	10/100	**570.4093**	10/100	**570.4193** [2] [3]	9/90
13A			BRITISH BS1363		**570.2041**	10/100	**570.4041**	10/100	**570.4141** [2] [3]	9/90
16A	2P+E	250V	FRENCH		**570.2091**	10/100	**570.4091**	10/100	**570.4191** [2] [3]	9/90
					570.2591 [1]	10/100				
			GERMAN		**570.2062**	10/100	**570.4062**	10/100	**570.4162** [2] [3]	9/90
			ITALIAN P30		**570.2081**	10/100	**570.4081**	10/100	**570.4181** [2] [3]	9/90
			ITALIAN P40				**570.4051**	10/100	**570.4151** [2] [3]	9/90
			ITALIAN P17/11		**570.2071**	10/100	**570.4071**	10/100	**570.4171** [2] [3]	9/90
			GERMAN UNSHUTTER		**570.2061** [1]	10/100	**570.4061** [1]	10/100	**570.4161** [1] [2] [3]	9/90
					570.2561 [1]	10/100				
20A			BRAZILIAN		**570.2092**	10/100	**570.4092**	10/100	**570.4192** [2] [3]	9/90

[1] Shutterless socket, subject to normative restrictions or prohibitions in Europe or in other geographical areas. Check the national laws prior to using or installing it.
[2] Blank side with drilling point mark
[3] Rubber cable sleeve included

570.2001
Accessory used to fix the DOMO Series sockets (50x60 mm) on the side entries of the ENERBOX Series

FRENCH STANDARD 16A
Shuttered socket

FRENCH-GERMAN STANDARD 16A
Shuttered socket

ITALIAN STANDARD P30 - 16A
Shuttered socket CEI 23-50

PLURISTANDARD P40 16A
Shuttered socket

BRITISH STANDARD 13A
Shuttered socket BS 1363-2

ITALIAN STANDARD P17/11 16A (bivalente)
Shuttered socket CEI 23-50

ARGENTINIAN STANDARD 10A
Unshuttered socket

BRAZILIAN STANDARD 10A
Unshuttered socket ABNT NBR 14136:2002

					DOMO Series
					570.
					With switch
					SURF. MOUNT. SCKET WITH SWITCH
Current	**Poles**	**Volt**	**Version**	**Colour**	IP54
13A	2P+E	250V	BRITISH BS1363		**570.7180** 1/12

Accessories for plugs and sockets

					ENCLOSURES ACCESSORIES
					654.
Description	**Flange**	**Notes**	**Colour**	**IP**	**Plates**
CUT-OUT PLATE	70x87mm	70x87 --> 50x60		IP66	**654.0103** 25

- With gasket

GERMAN STANDARD
16A
Unshuttered socket

Connectors and sockets for industrial applications

Domestic standard socket for industrial applications - IP54

Accessories for plugs and sockets

					DOMO Series 570.	
Description	**Flange**	**IP**	**Suitable for**	**Colour**	**Watertight cover**	
CABINET FIXING					**570.2001** 10/100	
FLUSH MOUNTING FRAME	70x87mm	IP55	EVOLUTION			**570.5052** [1] 10/100
			BTICINO			**570.5012** [1] [2] 10/100

[1] Modules snap into place.

[2] Manufactured with the autorization from Bticino spa company and is suitable to house “Living International”, “Luna”, “Light” and “Light Tech” modules which are registered trademarks owned by Bticino.

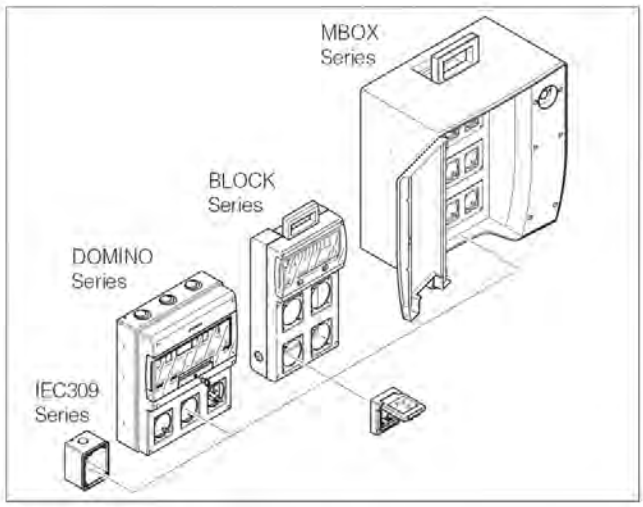

DOMO Series
Examples of installation (flange 70x87mm)

RJ45
Standard Ethernet

ITALIAN STANDARD P17/11 16A (bivalente)
Shuttered socket CEI 23-50

FRENCH STANDARD 16A
Shuttered socket

BRITISH STANDARD 15A
Shuttered socket BS 546

FRENCH-GERMAN STANDARD 16A
Shuttered socket

ITALIAN STANDARD P30 - 16A
Shuttered socket CEI 23-50

PLURISTANDARD P40 16A
Shuttered socket

BRITISH STANDARD 13A
Shuttered socket BS 1363-2

DOMOPLUS Series - Domestic standard sockets for industrial applications - IP66

DOMOPLUS Series

570.

Description	Version	Current	Dimension	Flush mounting 70x87mm		Accessories	
RJ45 OUTLET	RJ45		70x87mm	**570.6481.50** [1]	1/12		
ENCLOSURE						**570.6001** [2] [3]	1/12
GERMAN STANDARD SOCKET	GERMAN	16A		**570.6407**	1/12		
ITALIAN P30 STANDARD SOCKET	ITALIAN P30	16A		**570.6404**	1/12		
ITALIAN P40 STANDARD SOCKET	ITALIAN P40	16A		**570.6405**	1/12		
SINGLE UNSWITCHED SOCKET	BRITISH BS546	15A		**570.6414**	1/12		
	BRITISH BS1363	13A		**570.6413**	1/12		
ITALIAN P17/11 STANDARD SOCKET	ITALIAN P17/11 (DUAL USE)	16A		**570.6403**	1/12		
FRENCH STANDARD SOCKET	FRENCH	16A		**570.6411**	1/12		
ARGENTINIAN STANDARD SOCKET	ARGENTINE	10A		**570.6424**	1/12		
NEOZELANDER STANDARD SOCKET	NEW ZELAND	10A		**570.6427**	1/12		
SOUTH AFRICAN STANDARD SOCKET	SOUTH AFRICAN	16A		**570.6428**	1/12		
SWISS STANDARD SOCKET	SWISS	10A		**570.6417**	1/12		
BRAZILIAN STANDARD SOCKET	BRAZILIAN	10A		**570.6421**	1/12		
PANEL MOUNTING ADAPTOR						**570.6011**	5

[1] RJ45 - Cat.5E

[2] Empty enclosure

[3] Accepts SCAME EVOLUTION Series inserts.

570.6001
The empty container accepts EVOLUTION Series modules

SWISS STANDARD 10A
Unshuttered socket SEV 1011:1998

ARGENTINIAN STANDARD 10A
Unshuttered socket

BRAZILIAN STANDARD 10A
Unshuttered socket ABNT NBR 14136:2002

NEW ZEALAND STANDARD 10A
Unshuttered socket AS/N25 3112

SOUTH AFRICAN STANDARD 16A
Shuttered socket SANS 164:1 (2006)

IP66
Specifically high formulated gel seal to maintain protection degree when the plug is inserted

Connectors and sockets for industrial applications

Accessories for sockets

Boxes

DOMO Series

570.

Surface mounting boxes | **Surface mounting boxes**

			SURFACE MOUNTING BOX					
			STRAIGHT		ANGLED			
Cable outlet	**Current**	**Colour**	IP66/IP67/IP69		IP66/IP67/IP69			
DRILLING POINT MARK	16A		**570.0016** 3 4	10/100	**570.0116** 3 4	10		
	32A		**570.0032** 3 4	10	**570.0132** 3 4	10		
M20X1,5	16A						**570.0116.20** 1 2	10
M25X1,5							**570.0116.25** 1 2	10
M32X1,5	32A						**570.0132.32** 1 2	10
M40X1,5	63A						**570.M0163** 1 2	6
M63X1,5	125A						**570.M0125** 1 2	6

1 Open threaded cable entry
2 Threaded cap/cable sleeve included
3 Blank side with drilling point mark
4 Rubber cable sleeve included
- Suitable for the sealing caps
- Supplied with socket fastening screws.

Kit

ENCLOSURES ACCESSORIES

654.

Description	**Flange**	**Notes**	**Colour**	**IP**	**Flange adapter**	
CUT-OUT PLATE	84x106mm	84x106 --> 75x75		IP66	**654.0108**	5

- With gasket

Kit

		OPTIMA Series
		654.
Description	**Notes**	**Kit micro-switch (suitable for OPTIMA Series)**
MICROSWITCH KIT	16/32A NC	**654.0392** 10
	16/32A NO	**654.0391** 10
	63/125A NC	**654.0394** 10
	63/125A NO	**654.0393** 10

- Suited for flush mounting angled outlet versions only
- For inserted plug detection

		OPTIMA-TOP Series
		654.
Description	**Notes**	**Kit accessories for plugs and sockets**
TERMINAL BLOCKS LOOP IN/OUT	6mm²	**654.0382** 10/100

- For 5-pole OPTIMA-TOP executions

				UNION Series
				805.
Description	**IP**	**Colour**	**Cable outlet**	**Kit accessories for plugs and sockets**
THREADED CABLE SLEEVE	IP55		M20X1,5	**805.5020** 100/1000
			M25X1,5	**805.5025** 100/1000
			M32X1,5	**805.5032** 100/1000

1.3

Switched interlocked sockets outlets

- OMNIA Series
  Interlocked-switch socket outlets for industrial applications
- OMNIAPLUS Series
  Domestic interlocked socket
- OMNIA System
  Flush and surface mounting modular system
- ADVANCE2 Series
  Interlocked-switch socket outlets for industrial applications
- ADVANCE2 System
  Modular system for combination units - IP66
- ADVANCE-GRP Series
  Interlocked-switch socket outlets for industrial applications
- ADVANCE-GRP System
  Modular system - IP66

SCENE

Switched interlocked sockets outlets

OMNIA Series

Rated voltage >50V >> Without fuse carrier >> Flush mounting

IP44

Poles	Hz	Volt	Colour	h	OMNIA Series 400. INTERLOCKED SOCKET IP44 136x125mm 16A		OMNIA Series 400. INTERLOCKED SOCKET IP44 136x125mm 32A	
2P+E	50Hz 60Hz	100-130V		4h	**400.1670**	6	**400.3270**	6
		200-250V		6h	**400.1683**	6	**400.3283**	6
		380-415V		9h	**400.1678**	6	**400.3278**	6
		480-500V		7h	**400.16836**	6	**400.32836**	6
		TST>50V		12h	**400.16833**	6	**400.32833**	6
	>300-500Hz	>50V		2h	**400.16832** [1]	6	**400.32832** [1]	6
	DC	>50-250V		3h	**400.16834** [2]	6	**400.32834** [2]	6
		>250V		8h	**400.16838** [2]	6	**400.32838** [2]	6
3P+E	50Hz 60Hz	100-130V		4h	**400.1672**	6	**400.3272**	6
		200-250V		9h	**400.1674**	6	**400.3274**	6
		380-415V		6h	**400.1686**	6	**400.3286**	6
		380V 50Hz / 440V 60Hz		3h	**400.16864**	6	**400.32864**	6
		480-500V		7h	**400.16866**	6	**400.32866**	6
		600-690V		5h	**400.16867** [3]	6	**400.32867** [3]	6
	60Hz	440-460V		11h	**400.16865**	6	**400.32865**	6
	100-300Hz	>50V		10h	**400.16861** [1]	6	**400.32861** [1]	6
	>300-500Hz			2h	**400.16862** [1]	6	**400.32862** [1]	6
3P+N+E	50Hz 60Hz	100-130V		4h	**400.1679**	6	**400.3279**	6
		208-250V		9h	**400.1675**	6	**400.3275**	6
		346-415V		6h	**400.1687**	6	**400.3287**	6
		380V 50Hz / 440V 60Hz		3h	**400.16874**	6	**400.32874**	6
		480-500V		7h	**400.16876**	6	**400.32876**	6
		600-690V		5h	**400.16877** [3]	6	**400.32877** [3]	6
	60Hz	440-460V		11h	**400.16875**	6	**400.32875**	6
	>300-500Hz	>50V		2h	**400.16872** [1]	6	**400.32872** [1]	6

[1] The maximum amount of current available, taking into account the maximum overheating temperature allowed by the relevant standards, must be downgraded with respect to the nominal current by 25% for products with frequencies ranging above 100 Hz; contact Scame Technical Service for further information.

[2] When using DC we recommend that you make sure of implementing the protection scheme that is most suitable for the system involved; contact Scame Technical Service for further information.

[3] Pay special attention when selecting the appropriate fuse with respect to the tension of the installation.

- Supplied with stainless steel fixing screws.

Rated voltage >50V >> Without fuse carrier >> Flush mounting

OMNIA Series

405.

IP66/IP67

					INTERLOCKED SOCKET IP66/IP67					
					136x125mm				136x275mm	
Poles	**Hz**	**Volt**	**Colour**	**h**	16A		32A		63A	
2P+E	50Hz 60Hz	100-130V		4h	**405.1670**	6	**405.3270**	6	**405.6370**	1/6
		200-250V		6h	**405.1683**	6	**405.3283**	6	**405.6383**	1/6
		380-415V		9h	**405.1678**	6	**405.3278**	6	**405.6378**	1/6
		480-500V		7h	**405.16836**	6	**405.32836**	6	**405.63836**	1/6
		TST>50V		12h	**405.16833**	6	**405.32833**	6	**405.63833**	1/6
	>300-500Hz	>50V		2h	**405.16832** [1]	6	**405.32832** [1]	6		
	DC	>50-250V		3h	**405.16834** [2]	6	**405.32834** [2]	6		
		>250V		8h	**405.16838** [2]	6	**405.32838** [2]	6		
3P+E	50Hz 60Hz	100-130V		4h	**405.1672**	6	**405.3272**	6	**405.6372**	1/6
		200-250V		9h	**405.1674**	6	**405.3274**	6	**405.6374**	1/6
		380-415V		6h	**405.1686**	6	**405.3286**	6	**405.6386**	1/6
		380V 50Hz / 440V 60Hz		3h	**405.16864**	6	**405.32864**	6		
		480-500V		7h	**405.16866**	6	**405.32866**	6	**405.63866**	1/6
		600-690V		5h	**405.16867** [3]	6	**405.32867** [3]	6	**405.63867** [3]	1/6
	60Hz	440-460V		11h	**405.16865**	6	**405.32865**	6	**405.63865**	1/6
	100-300Hz	>50V		10h	**405.16861** [1]	6	**405.32861** [1]	6		
	>300-500Hz			2h	**405.16862** [1]	6	**405.32862** [1]	6		
3P+N+E	50Hz 60Hz	100-130V		4h	**405.1679**	6	**405.3279**	6	**405.6379**	1/6
		208-250V		9h	**405.1675**	6	**405.3275**	6	**405.6375**	1/6
		346-415V		6h	**405.1687**	6	**405.3287**	6	**405.6387**	1/6
		380V 50Hz / 440V 60Hz		3h	**405.16874**	6	**405.32874**	6		
		480-500V		7h	**405.16876**	6	**405.32876**	6	**405.63876**	1/6
		600-690V		5h	**405.16877** [3]	6	**405.32877** [3]	6	**405.63877** [3]	1/6
	60Hz	440-460V		11h	**405.16875**	6	**405.32875**	6	**405.63875**	1/6
	>300-500Hz	>50V		2h	**405.16872** [1]	6	**405.32872** [1]	6		

[1] The maximum amount of current available, taking into account the maximum overheating temperature allowed by the relevant standards, must be downgraded with respect to the nominal current by 25% for products with frequencies ranging above 100 Hz; contact Scame Technical Service for further information.

[2] When using DC we recommend that you make sure of implementing the protection scheme that is most suitable for the system involved; contact Scame Technical Service for further information.

[3] Pay special attention when selecting the appropriate fuse with respect to the tension of the installation.

- Supplied with stainless steel fixing screws.

Switched interlocked sockets outlets

OMNIA Series

Rated voltage >50V >> Without fuse carrier >> Surface mounting

IP44

Poles	Hz	Volt	Colour	h	OMNIA Series 500. INTERLOCKED SOCKET IP44 136x125mm 16A		OMNIA Series 500. INTERLOCKED SOCKET IP44 136x125mm 32A	
2P+E	50Hz 60Hz	100-130V		4h	**500.1670**	6	**500.3270**	6
		200-250V		6h	**500.1683**	6	**500.3283**	6
		380-415V		9h	**500.1678**	6	**500.3278**	6
		480-500V		7h	**500.16836**	6	**500.32836**	6
		TST>50V		12h	**500.16833**	6	**500.32833**	6
	>300-500Hz	>50V		2h	**500.16832** [1]	6	**500.32832** [1]	6
	DC	>50-250V		3h	**500.16834** [2]	6	**500.32834** [2]	6
		>250V		8h	**500.16838** [2]	6	**500.32838** [2]	6
3P+E	50Hz 60Hz	100-130V		4h	**500.1672**	6	**500.3272**	6
		200-250V		9h	**500.1674**	6	**500.3274**	6
		380-415V		6h	**500.1686**	6	**500.3286**	6
		380V 50Hz / 440V 60Hz		3h	**500.16864**	6	**500.32864**	6
		480-500V		7h	**500.16866**	6	**500.32866**	6
		600-690V		5h	**500.16867** [3]	6	**500.32867** [3]	6
	60Hz	440-460V		11h	**500.16865**	6	**500.32865**	6
	100-300Hz	>50V		10h	**500.16861** [1]	6	**500.32861** [1]	6
	>300-500Hz			2h	**500.16862** [1]	6	**500.32862** [1]	6
3P+N+E	50Hz 60Hz	100-130V		4h	**500.1679**	6	**500.3279**	6
		208-250V		9h	**500.1675**	6	**500.3275**	6
		346-415V		6h	**500.1687**	6	**500.3287**	6
		380V 50Hz / 440V 60Hz		3h	**500.16874**	6	**500.32874**	6
		480-500V		7h	**500.16876**	6	**500.32876**	6
		600-690V		5h	**500.16877** [3]	6	**500.32877** [3]	6
	60Hz	440-460V		11h	**500.16875**	6	**500.32875**	6
	>300-500Hz	>50V		2h	**500.16872** [1]	6	**500.32872** [1]	6

[1] The maximum amount of current available, taking into account the maximum overheating temperature allowed by the relevant standards, must be downgraded with respect to the nominal current by 25% for products with frequencies ranging above 100 Hz; contact Scame Technical Service for further information.

[2] When using DC we recommend that you make sure of implementing the protection scheme that is most suitable for the system involved; contact Scame Technical Service for further information.

[3] Pay special attention when selecting the appropriate fuse with respect to the tension of the installation.

- Supplied with stainless steel fixing screws.
- Note: in case of mounting with ADVANCE2 System, use METRIC drilling point mark.
- Blank side with drilling point mark

Rated voltage >50V >> Without fuse carrier >> Surface mounting

OMNIA Series

505.

IP66/IP67

					INTERLOCKED SOCKET IP66/IP67					
					136x125mm				136x275mm	
Poles	**Hz**	**Volt**	**Colour**	**h**	16A		32A		63A	
2P+E	50Hz 60Hz	100-130V		4h	**505.1670**	6	**505.3270**	6	**505.6370**	
		200-250V		6h	**505.1683**	6	**505.3283**	6	**505.6383**	1/6
		380-415V		9h	**505.1678**	6	**505.3278**	6	**505.6378**	
		480-500V		7h	**505.16836**	6	**505.32836**	6	**505.63836**	
		TST>50V		12h	**505.16833**	6	**505.32833**	6	**505.63833**	
	>300-500Hz	>50V		2h	**505.16832** [1]	6	**505.32832** [1]	6		
	DC	>50-250V		3h	**505.16834** [2]	6	**505.32834** [2]	6	**505.63834** [2]	
		>250V		8h	**505.16838** [2]	6	**505.32838** [2]	6		
3P+E	50Hz 60Hz	100-130V		4h	**505.1672**	6	**505.3272**	6	**505.6372**	
		200-250V		9h	**505.1674**	6	**505.3274**	6	**505.6374**	
		380-415V		6h	**505.1686**	6	**505.3286**	6	**505.6386**	1/6
		380V 50Hz / 440V 60Hz		3h	**505.16864**	6	**505.32864**	6		
		480-500V		7h	**505.16866**	6	**505.32866**	6	**505.63866**	
		600-690V		5h	**505.16867** [3]	6	**505.32867** [3]	6	**505.63867** [3]	
	60Hz	440-460V		11h	**505.16865**	6	**505.32865**	6	**505.63865**	
	100-300Hz	>50V		10h	**505.16861** [1]	6	**505.32861** [1]	6		
	>300-500Hz			2h	**505.16862** [1]	6	**505.32862** [1]	6		
3P+N+E	50Hz 60Hz	100-130V		4h	**505.1679**	6	**505.3279**	6	**505.6379**	1/6
		208-250V		9h	**505.1675**	6	**505.3275**	6	**505.6375**	
		346-415V		6h	**505.1687**	6	**505.3287**	6	**505.6387**	1/6
		380V 50Hz / 440V 60Hz		3h	**505.16874**	6	**505.32874**	6		
		480-500V		7h	**505.16876**	6	**505.32876**	6	**505.63876**	
		600-690V		5h	**505.16877** [3]	6	**505.32877** [3]	6	**505.63877** [3]	
	60Hz	440-460V		11h	**505.16875**	6	**505.32875**	6	**505.63875**	
	>300-500Hz	>50V		2h	**505.16872** [1]	6	**505.32872** [1]	6		

[1] The maximum amount of current available, taking into account the maximum overheating temperature allowed by the relevant standards, must be downgraded with respect to the nominal current by 25% for products with frequencies ranging above 100 Hz; contact Scame Technical Service for further information.

[2] When using DC we recommend that you make sure of implementing the protection scheme that is most suitable for the system involved; contact Scame Technical Service for further information.

[3] Pay special attention when selecting the appropriate fuse with respect to the tension of the installation.

- Supplied with stainless steel fixing screws.
- Note: in case of mounting with ADVANCE2 System, use METRIC drilling point mark.
- Blank side with drilling point mark

Switched interlocked sockets outlets

OMNIA Series

Rated voltage >50V >> With fuse carrier >> Flush mounting

IP44

Poles	Hz	Volt	Colour	h	OMNIA Series 401. INTERLOCKED SOCKET IP44 136x125mm 16A		OMNIA Series 401. INTERLOCKED SOCKET IP44 136x125mm 32A	
2P+E	50Hz 60Hz	100-130V		4h	**401.1670**	6	**401.3270**	6
		200-250V		6h	**401.1683**	6	**401.3283**	6
		380-415V		9h	**401.1678**	6	**401.3278**	6
		480-500V		7h	**401.16836**	6		
		TST>50V		12h	**401.16833**	6		
	>300-500Hz	>50V		2h	**401.16832** [1]	6		
	DC	>50-250V		3h	**401.16834** [2]	6		
		>250V		8h	**401.16838** [2]	6		
3P+E	50Hz 60Hz	100-130V		4h	**401.1672**	6	**401.3272**	6
		200-250V		9h	**401.1674**	6	**401.3274**	6
		380-415V		6h	**401.1686**	6	**401.3286**	6
		380V 50Hz / 440V 60Hz		3h	**401.16864**	6		
		480-500V		7h	**401.16866**	6		
		600-690V		5h	**401.16867** [3]	6		
	60Hz	440-460V		11h	**401.16865**	6		
	100-300Hz	>50V		10h	**401.16861** [1]	6		
	>300-500Hz			2h	**401.16862** [1]	6		
3P+N+E	50Hz 60Hz	100-130V		4h	**401.1679**	6	**401.3279**	6
		208-250V		9h	**401.1675**	6	**401.3275**	6
		346-415V		6h	**401.1687**	6	**401.3287**	6
		380V 50Hz / 440V 60Hz		3h	**401.16874**	6		
		480-500V		7h	**401.16876**	6		
		600-690V		5h	**401.16877** [3]	6		
	60Hz	440-460V		11h	**401.16875**	6		
	>300-500Hz	>50V		2h	**401.16872** [1]	6		

[1] The maximum amount of current available, taking into account the maximum overheating temperature allowed by the relevant standards, must be downgraded with respect to the nominal current by 25% for products with frequencies ranging above 100 Hz; contact Scame Technical Service for further information.

[2] When using DC we recommend that you make sure of implementing the protection scheme that is most suitable for the system involved; contact Scame Technical Service for further information.

[3] Pay special attention when selecting the appropriate fuse with respect to the tension of the installation.

- Supplied with stainless steel fixing screws.
- Fuses not supplied

Rated voltage >50V >> With fuse carrier >> Flush mounting

OMNIA Series

406.

IP66/IP67

INTERLOCKED SOCKET
IP66/IP67
136x125mm

Poles	Hz	Volt	Colour	h	16A		32A	
2P+E	50Hz 60Hz	100-130V		4h	**406.1670**	6	**406.3270**	6
		200-250V		6h	**406.1683**	6	**406.3283**	6
		380-415V		9h	**406.1678**	6	**406.3278**	6
		480-500V		7h	**406.16836**	6		
		TST>50V		12h	**406.16833**	6		
	>300-500Hz	>50V		2h	**406.16832** [1]	6		
	DC	>50-250V		3h	**406.16834** [2]	6		
		>250V		8h	**406.16838** [2]	6		
3P+E	50Hz 60Hz	100-130V		4h	**406.1672**	6	**406.3272**	6
		200-250V		9h	**406.1674**	6	**406.3274**	6
		380-415V		6h	**406.1686**	6	**406.3286**	6
		380V 50Hz / 440V 60Hz		3h	**406.16864**	6		
		480-500V		7h	**406.16866**	6		
		600-690V		5h	**406.16867** [3]	6		
	60Hz	440-460V		11h	**406.16865**	6		
	100-300Hz	>50V		10h	**406.16861** [1]	6		
	>300-500Hz			2h	**406.16862** [1]	6		
3P+N+E	50Hz 60Hz	100-130V		4h	**406.1679**	6	**406.3279**	6
		208-250V		9h	**406.1675**	6	**406.3275**	6
		346-415V		6h	**406.1687**	6	**406.3287**	6
		380V 50Hz / 440V 60Hz		3h	**406.16874**	6		
		480-500V		7h	**406.16876**	6		
		600-690V		5h	**406.16877** [3]	6		
	60Hz	440-460V		11h	**406.16875**	6		
	>300-500Hz	>50V		2h	**406.16872** [1]	6		

[1] The maximum amount of current available, taking into account the maximum overheating temperature allowed by the relevant standards, must be downgraded with respect to the nominal current by 25% for products with frequencies ranging above 100 Hz; contact Scame Technical Service for further information.

[2] When using DC we recommend that you make sure of implementing the protection scheme that is most suitable for the system involved; contact Scame Technical Service for further information.

[3] Pay special attention when selecting the appropriate fuse with respect to the tension of the installation.

- Supplied with stainless steel fixing screws.
- Fuses not supplied

Switched interlocked sockets outlets

OMNIA Series

Rated voltage >50V >> With fuse carrier >> Surface mounting

					OMNIA Series			
					501.			
					IP44			
					INTERLOCKED SOCKET			
					IP44			
					136x125mm			
Poles	**Hz**	**Volt**	**Colour**	**h**	16A		32A	
2P+E	50Hz 60Hz	100-130V		4h	**501.1670**	6	**501.3270**	6
		200-250V		6h	**501.1683**	6	**501.3283**	6
		380-415V		9h	**501.1678**	6	**501.3278**	6
		480-500V		7h	**501.16836**	6		
		TST>50V		12h	**501.16833**	6		
	>300-500Hz	>50V		2h	**501.16832** [1]	6		
	DC	>50-250V		3h	**501.16834** [2]	6		
		>250V		8h	**501.16838** [2]	6		
3P+E	50Hz 60Hz	100-130V		4h	**501.1672**	6	**501.3272**	6
		200-250V		9h	**501.1674**	6	**501.3274**	6
		380-415V		6h	**501.1686**	6	**501.3286**	6
		380V 50Hz / 440V 60Hz		3h	**501.16864**	6		
		480-500V		7h	**501.16866**	6		
		600-690V		5h	**501.16867** [3]	6		
	60Hz	440-460V		11h	**501.16865**	6		
	100-300Hz	>50V		10h	**501.16861** [1]	6		
	>300-500Hz			2h	**501.16862** [1]	6		
3P+N+E	50Hz 60Hz	100-130V		4h	**501.1679**	6	**501.3279**	6
		208-250V		9h	**501.1675**	6	**501.3275**	6
		346-415V		6h	**501.1687**	6	**501.3287**	6
		380V 50Hz / 440V 60Hz		3h	**501.16874**	6		
		480-500V		7h	**501.16876**	6		
		600-690V		5h	**501.16877** [3]	6		
	60Hz	440-460V		11h	**501.16875**	6		
	>300-500Hz	>50V		2h	**501.16872** [1]	6		

[1] The maximum amount of current available, taking into account the maximum overheating temperature allowed by the relevant standards, must be downgraded with respect to the nominal current by 25% for products with frequencies ranging above 100 Hz; contact Scame Technical Service for further information.

[2] When using DC we recommend that you make sure of implementing the protection scheme that is most suitable for the system involved; contact Scame Technical Service for further information.

[3] Pay special attention when selecting the appropriate fuse with respect to the tension of the installation.

- Supplied with stainless steel fixing screws.
- Note: in case of mounting with ADVANCE2 System, use METRIC drilling point mark.
- Blank side with drilling point mark
- Fuses not supplied

Rated voltage >50V >> With fuse carrier >> Surface mounting

IP66/IP67

					OMNIA Series			
					506.			
					INTERLOCKED SOCKET			
					IP66/IP67			
					136x125mm			
Poles	**Hz**	**Volt**	**Colour**	**h**	16A		32A	
2P+E	50Hz 60Hz	100-130V		4h	**506.1670**	6	**506.3270**	6
		200-250V		6h	**506.1683**	6	**506.3283**	6
		380-415V		9h	**506.1678**	6	**506.3278**	6
		480-500V		7h	**506.16836**	6		
		TST>50V		12h	**506.16833**	6		
	>300-500Hz	>50V		2h	**506.16832** [1]	6		
	DC	>50-250V		3h	**506.16834** [2]	6		
		>250V		8h	**506.16838** [2]	6		
3P+E	50Hz 60Hz	100-130V		4h	**506.1672**	6	**506.3272**	6
		200-250V		9h	**506.1674**	6	**506.3274**	6
		380-415V		6h	**506.1686**	6	**506.3286**	6
		380V 50Hz / 440V 60Hz		3h	**506.16864**	6		
		480-500V		7h	**506.16866**	6		
		600-690V		5h	**506.16867** [3]	6		
	60Hz	440-460V		11h	**506.16865**	6		
	100-300Hz	>50V		10h	**506.16861** [1]	6		
	>300-500Hz			2h	**506.16862** [1]	6		
3P+N+E	50Hz 60Hz	100-130V		4h	**506.1679**	6	**506.3279**	6
		208-250V		9h	**506.1675**	6	**506.3275**	6
		346-415V		6h	**506.1687**	6	**506.3287**	6
		380V 50Hz / 440V 60Hz		3h	**506.16874**	6		
		480-500V		7h	**506.16876**	6		
		600-690V		5h	**506.16877** [3]	6		
	60Hz	440-460V		11h	**506.16875**	6		
	>300-500Hz	>50V		2h	**506.16872** [1]	6		

[1] The maximum amount of current available, taking into account the maximum overheating temperature allowed by the relevant standards, must be downgraded with respect to the nominal current by 25% for products with frequencies ranging above 100 Hz; contact Scame Technical Service for further information.

[2] When using DC we recommend that you make sure of implementing the protection scheme that is most suitable for the system involved; contact Scame Technical Service for further information.

[3] Pay special attention when selecting the appropriate fuse with respect to the tension of the installation.

- Supplied with stainless steel fixing screws.
- Note: in case of mounting with ADVANCE2 System, use METRIC drilling point mark.
- Blank side with drilling point mark
- Fuses not supplied

Switched interlocked sockets outlets

OMNIA Series

Extra low voltage <50V >> Flush mounting (with safety transformer)

					OMNIA Series	
					400.	405.
					With safety transformer - IP44	**With safety transformer - IP66/IP67**
					INTERLOCKED SOCKET	
					IP44	IP66/IP67
Current	**Poles**	**Hz**	**Volt**	**Colour**	136x125mm	
16A	2P	50Hz 60Hz	20-25V		**400.2416** 6	**405.2416** 6

SELV transformer 220/24V~ 60VA (continuous duty)

- Unsuitable for ADVANCE2 System. Use box ref. 572.0309
- When plug is inserted a micro-switch is activated and closes the circuit

Extra low voltage <50V >> Flush mounting (without safety transformer)

						OMNIA Series	
						400.	405.
						Without safety transformer - IP44	**Without safety transformer - IP66/IP67**
						INTERLOCKED SOCKET	
						IP44	IP66/IP67
Current	**Poles**	**Hz**	**Volt**	**Colour**	**h**	136x125mm	
16A	2P	50Hz 60Hz	20-25V			**400.2420** 6	**405.2420** 6
			40-50V		12h	**400.2421** 6	**405.2421** 6
32A			20-25V			**400.2620** 6	**405.2620** 6
			40-50V		12h	**400.2621** 6	**405.2621** 6

- The versions without transformer are particularly suitable for installations with centralised extra-low voltage transformer.
- When plug is inserted a micro-switch is activated and closes the circuit

Extra low voltage <50V >> Surface mounting

						OMNIA Series			
						500.		505.	
						Without safety transformer - IP44		**Without safety transformer - IP66/IP67**	
						INTERLOCKED SOCKET			
						IP44		IP66/IP67	
Current	**Poles**	**Hz**	**Volt**	**Colour**	**h**	136x125mm			
16A	2P	50Hz 60Hz	20-25V			**500.2420**	6	**505.2420**	6
			40-50V		12h	**500.2421**	6	**505.2421**	6
32A			20-25V			**500.2620**	6	**505.2620**	6
			40-50V		12h	**500.2621**	6	**505.2621**	6

- The versions without transformer are particularly suitable for installations with centralised extra-low voltage transformer.
- Note: in case of mounting with ADVANCE2 System, use METRIC drilling point mark.
- When plug is inserted a micro-switch is activated and closes the circuit
- Blank side with drilling point mark

OMNIA Series
Flange 136x125mm

Switched interlocked sockets outlets

OMNIAPLUS Series

Flush mounting

OMNIAPLUS Series

409.

Current	Version	Without protection		Protection with fuse 6.3x32		Protection with MCB		Protection with RCBO	
		DOMESTIC INTERLOCKED SOCKET							
		2P+E							
		IP56							
6A 16A	INDIAN	**409.0429**	1/6	**409.1429**	1/6	**409.2429**	1/6	**409.3429**	1/6
10A	SWISS	**409.0417**	1/6	**409.1417** [2]	1/6	**409.2417**	1/6	**409.3417**	1/6
10A	ARGENTINE	**409.0424**	1/6	**409.1424** [2]	1/6	**409.2424** [3]	1/6	**409.3424** [3]	1/6
10A	BRAZILIAN	**409.0421**	1/6	**409.1421** [2]	1/6	**409.2421**	1/6	**409.3421**	1/6
10A	NEW ZELAND	**409.0427**	1/6	**409.1427**	1/6	**409.2427**	1/6	**409.3427**	1/6
13A	BRITISH BS1363	**409.0413**	1/6	**409.1413**	1/6	**409.2413**	1/6	**409.3413**	1/6
16A	ITALIAN P17/11 (DUAL USE)	**409.0403**	1/6	**409.1403** [2]	1/6	**409.2403**	1/6	**409.3403**	1/6
16A	FRENCH	**409.0411**	1/6	**409.1411** [2]	1/6	**409.2411**	1/6	**409.3411**	1/6
16A	GERMAN	**409.0407**	1/6	**409.1407** [2]	1/6	**409.2407**	1/6	**409.3407**	1/6
16A	ITALIAN P30	**409.0404**	1/6	**409.1404** [2]	1/6	**409.2404**	1/6	**409.3404**	1/6
16A	ITALIAN P40	**409.0405**	1/6	**409.1405** [2]	1/6	**409.2405**	1/6	**409.3405**	1/6
16A	SOUTH AFRICAN	**409.0428**	1/6	**409.1428**	1/6	**409.2428**	1/6	**409.3428**	1/6
16A	GERMAN UNSHUTTER	**409.0412** [1]	1/6	**409.1412** [1]	1/6	**409.2412** [1]	1/6	**409.3412** [1]	1/6

[1] Shutterless socket, subject to normative restrictions or prohibitions in Europe or in other geographical areas. Check the national laws prior to using or installing it.

[2] Fuses supplied

[3] 10A (C10)

ITALIAN STANDARD P17/11 16A (bivalente)
Shuttered socket CEI 23-50

FRENCH STANDARD 16A
Shuttered socket

FRENCH-GERMAN STANDARD 16A
Shuttered socket

ITALIAN STANDARD P30 - 16A
Shuttered socket CEI 23-50

PLURISTANDARD P40 16A
Shuttered socket

BRITISH STANDARD 13A
Shuttered socket BS 1363-2

SWISS STANDARD 10A
Unshuttered socket SEV 1011:1998

ARGENTINIAN STANDARD 10A
Unshuttered socket

Domestic interlocked socket

	OMNIAPLUS Series
	409.

Description	IP	Accessories
EMPTY DOMESTIC INTER. SOCKET	IP56	**409.0400** 1/6

- Not suitable with English, South African and Indian standards EVOLUTION Series socket outlets.

OMNIAPLUS Series
Application examples (MBOX - OMNIA- ADVANCE2 - DOMINO)

BRAZILIAN STANDARD 10A
Unshuttered socket ABNT NBR 14136:2002

NEW ZEALAND STANDARD 10A
Unshuttered socket AS/N25 3112

SOUTH AFRICAN STANDARD 16A
Shuttered socket SANS 164:1 (2006)

INDIAN STANDARD 6/16A
Shuttered socket IS 1293:1988

GERMAN STANDARD 16A
Unshuttered socket

IP66
Specifically high formulated gel seal to maintain protection degree when the plug is inserted

Switched interlocked sockets outlets

OMNIA System

Flush and surface mounting modular system

OMNIA System

572.

Components for flush mounting installation

Dimension	Notes	BOX	BOX FOR PLASTERBOARD WALLS	COUPLING INSERT	FRAME
					IP55
160x149x72mm	OMNIA 16-32A	**572.0200** [1][2] 6			
160x149x75mm			**572.0205** [1][2] 6		
174x163x19mm					**572.0220** [3][4] 6/60
				572.0210 6/60	

[1] Complete with coupling insert
[2] Suited for being walled up in buried systems
[3] IP55 when assembled together with the relevant component.
[4] To be used in conjunction with flush-mounted boxes

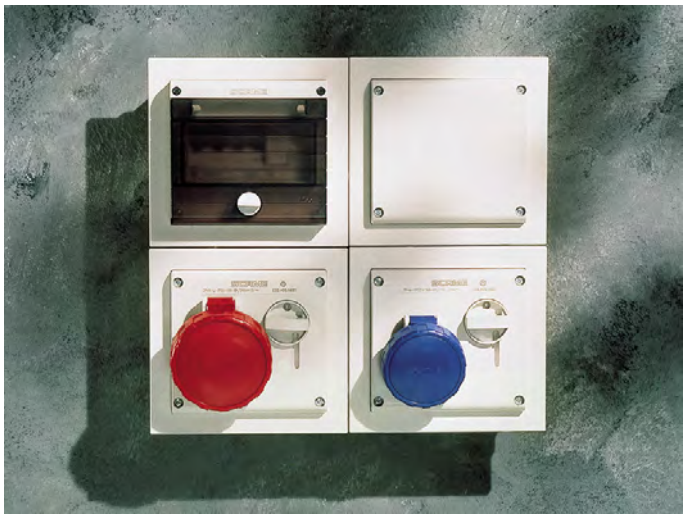

OMNIA System
Example of a flush mounting combination: consumer unit, junction box and OMNIA Series interlocked-switch socket outlet. IP55 weatherproof.

Flush and surface mounting modular system

		OMNIA System		
		572.		
			Components for surface mounting installation - Box	
		BOX	ENCLOSURE FOR SWITCH	BOX
Dimension	**Notes**		IP67	
135x125x70mm	16-32A	**572.0310** [1][2][3] 6		
135x275x89mm	63A			**572.0308** 1/6
136x125x85mm	OMNIA		**572.3390** [4] 6	
136x125x98mm	32A FUSE	**572.0309** 6		

[1] When joined with consumer unit (product 572.0120) [10W]
[2] Not suitable for items 400.2416 and 405.2416.
[3] Except 32A fuse versions.
[4] For fitting with Y1 switch size panel mounting version (R) and relevant front operators handless (IP65).
- Blank side with drilling point mark
- IP67 when assembled together with the relevant component.

Components for surface mounting installation - Equipment enclosure MBOX

		OMNIA System	
		572.	
		Blank cover	**2 OMNIA**
		BOX FOR WIRING ACCESSORIES	
Dimension	**Notes**	IP67	
136x275mm	2 OMNIA	**572.0320** 1/6	**572.0322** [1] 1/10

[1] IP67 when assembled together with the relevant component.
- Hole Ø 40.5 mm on the upper side
- They can be fitted into the MBOX5 enclosures
- For cable output, use tear-resistant cable glands fam. 805.
- Blank side with drilling point mark

Switched interlocked sockets outlets
OMNIA System

Components for surface mounting installation

		OMNIA System		
		572.		
		2 OMNIA + consumer units [6 DIN]	**3 OMNIA + consumer units [6 DIN]**	**4 OMNIA + consumer units [16 DIN]**
		MODULAR ENCLOSURE		
Dimension	**Power**	IP66		
136x472x146mm	12W	**572.0311** 1		
136x616x146mm			**572.0313** 1	
287x408x146mm				**572.0315** 1

- IP66 when coupled with the relevant component
- Power dissipation calculated in conformity with CEI 23-49 italian standards
- Blank side with drilling point mark

OMNIA System
Boxes flange 136x125mm

Components for surface mounting installation

	OMNIA System		
	572.		
	2 OMNIA + junction box	**3 OMNIA + junction box**	**4 OMNIA + junction box**
	MODULAR ENCLOSURE		
Dimension	IP66		
136x472x146mm	**572.0312** 1		
136x616x146mm		**572.0314** 1	
287x408x146mm			**572.0316** 1

- IP66 when coupled with the relevant component
- Power dissipation calculated in conformity with CEI 23-49 italian standards
- Blank side with drilling point mark

Common components

		OMNIA System	
		572.	
		Consumer unit assembly	
		CONSUMER UNIT ASSEMBLY	
Dimension	**Notes**	IP55	
136x125x25mm	6 DIN	**572.0120** 6	

- When joined with surface mounting box (product 572.0310) [10W]
- Complete with locking knob, triangular locking key and stainless steel fixing screws.
- Installation in the flush mounting box through the frame item 572.0220.
- DIN modules and supports included.
- The consumer unit can also be installed in the IP66 DOMINO Series surface mounting anclosures.
- Power dissipation calculated in conformity with CEI 23-49 italian standards
- IP55 when assembled together with the relevant component.

Switched interlocked sockets outlets
OMNIA System

Common components

	OMNIA System
	572.
	Protection cover
	PROTECTION COVER
Dimension	IP20
122x98x54mm	**572.0330** 4

- Top and bottom cable entries.
- For panel mounting of OMNIA Series interlocked switch sockets outlets without fuse carrier.
- Supplied with 2 fixing screws.

Accessories for enclosures

	ENCLOSURES ACCESSORIES
	654.

Description	Dimension	Suitable for	Kit folding stand	
STAND KIT	376x691x70mm	DOMINO IP66 M550 OMNIA	**654.0610**	1

- Folding

MOBIL Series
Support for DOMINO/OMNIA assemblies. The handy folding stand allows the panel to be transported even in limited-size motor vehicles .

Accessories for enclosures

ENCLOSURES ACCESSORIES

654.

Blank plates

Colour	IP	BLANK PLATE FOR PANEL CUT OUTS	COVER WITH INSERT		CUT-OUT PLATE	
			136x125mm			
		OMNIA			16A [70x87]	32A [84x106]
			EVOLUTION	BTICINO		
	IP55		**654.0122** [3] 6	**654.0121** [3] [4] 6		
	IP66	**654.0120** [1] [2] 6/72			**654.0125** [1] [2] 6/72	**654.0126** [1] [2] 6/72

[1] Covers for OMNIA Series cutouts

[2] IP66 when coupled with the relevant component

[3] Modules snap into place.

[4] Manufactured with the autorization from Bticino spa company and is suitable to house “Living International”, “Luna”, “Light” and “Light Tech” modules which are registered trademarks owned by Bticino.

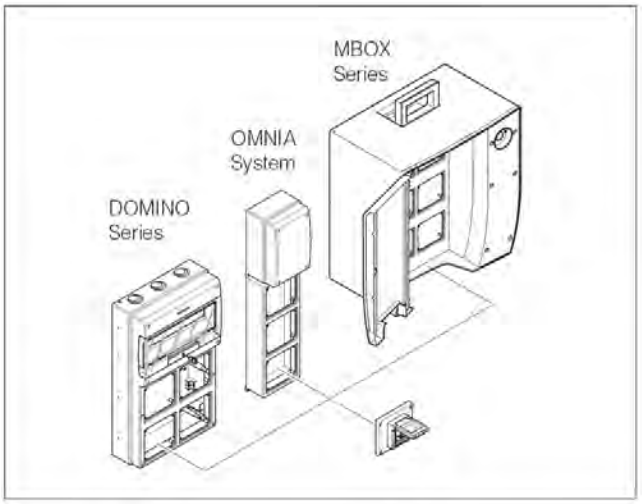

OMNIA Series
Examples of installation (flange 136x125mm)

Accessories for enclosures

				ENCLOSURES ACCESSORIES		
				654.		
Description	**Notes**	**Colour**	**Din**		**Blank plate for DIN modules**	
BLANK PLATE FOR DIN MODULES	9x45mm		1/2 DIN			**654.0420** [1] 25/400
	18x45mm		1 DIN		**654.0410** [1] 25/250	
	72x45mm		4 DIN	**654.0400** 25		

[1] To be fixed on DIN rail

- When put between the modular devices these plates help to dissipate heat

			TOP22 Series	
			590.	
Description	**Colour**	**Switch size**	**Contact blocks**	
NC CONTACT		Y1	**590.PL004001** [1]	10/60
		Y2	**590.PL004003** [1]	10
NO CONTACT		Y1	**590.PL004002** [2]	10/60
		Y2	**590.PL004004** [2]	10

[1] NC=Normally closed

[2] NO=Normally open

- Snap catch

Switched interlocked sockets outlets

ADVANCE2 Series

Rated operating voltage >50V >> Standard version

Without fuse carrier IP44

					ADVANCE 2 Series			
					560.			
					INTERLOCKED SOCKET			
					IP44			
					106x240mm			
					M25X1,5			
Poles	**Hz**	**Volt**	**Colour**	**h**	16A		32A	
2P+E	50Hz 60Hz	100-130V		4h	**560.1670**	1/12	**560.3270**	1/12
		200-250V		6h	**560.1683**	1/12	**560.3283**	1/12
		380-415V		9h	**560.1678**	1/12	**560.3278**	1/12
		480-500V		7h	**560.16836**	1/12	**560.32836**	1/12
		TST>50V		12h	**560.16833**	1/12	**560.32833**	1/12
	>300-500Hz	>50V		2h	**560.16832** [1]	1/12	**560.32832** [1]	1/12
	DC	>50-250V		3h	**560.16834** [2]	1/12	**560.32834** [2]	1/12
		>250V		8h	**560.16838** [2]	1/12	**560.32838** [2]	1/12
3P+E	50Hz 60Hz	100-130V		4h	**560.1672**	1/12	**560.3272**	1/12
		200-250V		9h	**560.1674**	1/12	**560.3274**	1/12
		380-415V		6h	**560.1686**	1/12	**560.3286**	1/12
		380V 50Hz / 440V 60Hz		3h	**560.16864**	1/12	**560.32864**	1/12
		480-500V		7h	**560.16866**	1/12	**560.32866**	1/12
		600-690V		5h	**560.16867** [3]	1/12	**560.32867** [3]	1/12
	60Hz	440-460V		11h	**560.16865**	1/12	**560.32865**	1/12
	100-300Hz	>50V		10h	**560.16861** [1]	1/12	**560.32861** [1]	1/12
	>300-500Hz			2h	**560.16862** [1]	1/12	**560.32862** [1]	1/12
3P+N+E	50Hz 60Hz	100-130V		4h	**560.1679**	1/12	**560.3279**	1/12
		208-250V		9h	**560.1675**	1/12	**560.3275**	1/12
		346-415V		6h	**560.1687**	1/12	**560.3287**	1/12
		380V 50Hz / 440V 60Hz		3h	**560.16874**	1/12	**560.32874**	1/12
		480-500V		7h	**560.16876**	1/12	**560.32876**	1/12
		600-690V		5h	**560.16877** [3]	1/12	**560.32877** [3]	1/12
	60Hz	440-460V		11h	**560.16875**	1/12	**560.32875**	1/12
	>300-500Hz	>50V		2h	**560.16872** [1]	1/12	**560.32872** [1]	1/12

[1] The maximum amount of current available, taking into account the maximum overheating temperature allowed by the relevant standards, must be downgraded with respect to the nominal current by 25% for products with frequencies ranging above 100 Hz; contact Scame Technical Service for further information.

[2] When using DC we recommend that you make sure of implementing the protection scheme that is most suitable for the system involved; contact Scame Technical Service for further information.

[3] Pay special attention when selecting the appropriate fuse with respect to the tension of the installation.

- Supplied with stainless steel fixing screws.
- Open threaded cable entry
- Cable gland included
- Threaded cap/cable sleeve included

Rated operating voltage >50V >> Standard version

ADVANCE 2 Series

561.

Without fuse carrier
IP66/IP67

					INTERLOCKED SOCKET IP66/IP67							
					106x240mm						136x390mm	
					M25X1,5						M40X1,5	
Poles	**Hz**	**Volt**	**Colour**	**h**	16A		32A				63A	
2P+E	50Hz 60Hz	100-130V		4h	**561.1670**	1/12	**561.3270**	1/12	**561.6370** [4]	1/4		
		200-250V		6h	**561.1683**	1/12	**561.3283**	1/12	**561.6383** [4]	1/4		
		380-415V		9h	**561.1678**	1/12	**561.3278**	1/12	**561.6378** [4]	1/4		
		480-500V		7h	**561.16836**	1/12	**561.32836**	1/12	**561.63836** [4]	1/4		
		TST>50V		12h	**561.16833**	1/12	**561.32833**	1/12	**561.63833** [4]	1/4		
	>300-500Hz	>50V		2h	**561.16832** [1]	1/12	**561.32832** [1]	1/12				
	DC	>50-250V		3h	**561.16834** [2]	1/12	**561.32834** [2]	1/12	**561.63834** [2] [4]	1/4		
		>250V		8h	**561.16838** [2]	1/12	**561.32838** [2]	1/12	**561.63838** [2] [4]	1/4		
3P+E	50Hz 60Hz	100-130V		4h	**561.1672**	1/12	**561.3272**	1/12	**561.6372** [4]	1/4		
		200-250V		9h	**561.1674**	1/12	**561.3274**	1/12	**561.6374** [4]	1/4		
		380-415V		6h	**561.1686**	1/12	**561.3286**	1/12	**561.6386** [4]	1/4		
		380V 50Hz / 440V 60Hz		3h	**561.16864**	1/12	**561.32864**	1/12				
		480-500V		7h	**561.16866**	1/12	**561.32866**	1/12	**561.63866** [4]	1/4		
		600-690V		5h	**561.16867** [3]	1/12	**561.32867** [3]	1/12	**561.63867** [3] [4]	1/4		
	60Hz	440-460V		11h	**561.16865**	1/12	**561.32865**	1/12	**561.63865** [4]	1/4		
	100-300Hz	>50V		10h	**561.16861** [1]	1/12	**561.32861** [1]	1/12				
	>300-500Hz			2h	**561.16862** [1]	1/12	**561.32862** [1]	1/12				
3P+N+E	50Hz 60Hz	100-130V		4h	**561.1679**	1/12	**561.3279**	1/12	**561.6379** [4]	1/4		
		208-250V		9h	**561.1675**	1/12	**561.3275**	1/12	**561.6375** [4]	1/4		
		346-415V		6h	**561.1687**	1/12	**561.3287**	1/12	**561.6387** [4]	1/4		
		380V 50Hz / 440V 60Hz		3h	**561.16874**	1/12	**561.32874**	1/12				
		480-500V		7h	**561.16876**	1/12	**561.32876**	1/12	**561.63876** [4]	1/4		
		600-690V		5h	**561.16877** [3]	1/12	**561.32877** [3]	1/12	**561.63877** [3] [4]	1/4		
	60Hz	440-460V		11h	**561.16875**	1/12	**561.32875**	1/12	**561.63875** [4]	1/4		
	>300-500Hz	>50V		2h	**561.16872** [1]	1/12	**561.32872** [1]	1/12				

[1] The maximum amount of current available, taking into account the maximum overheating temperature allowed by the relevant standards, must be downgraded with respect to the nominal current by 25% for products with frequencies ranging above 100 Hz; contact Scame Technical Service for further information.

[2] When using DC we recommend that you make sure of implementing the protection scheme that is most suitable for the system involved; contact Scame Technical Service for further information.

[3] Pay special attention when selecting the appropriate fuse with respect to the tension of the installation.

[4] [LARGE] Possibility to enter from the bottom (smooth walls with drilling point mark)

- Supplied with stainless steel fixing screws.
- Open threaded cable entry
- Cable gland included
- Threaded cap/cable sleeve included

Switched interlocked sockets outlets

ADVANCE2 Series

Rated operating voltage >50V >> Standard version [FUSE]

With fuse carrier IP44

					ADVANCE 2 Series			
					562.			
					INTERLOCKED SOCKET			
					IP44			
					106x240mm			
					M25X1,5			
Poles	**Hz**	**Volt**	**Colour**	**h**	16A		32A	
2P+E	50Hz 60Hz	100-130V		4h	**562.1670**	1/12	**562.3270**	1/12
		200-250V		6h	**562.1683**	1/12	**562.3283**	1/12
		380-415V		9h	**562.1678**	1/12	**562.3278**	1/12
		480-500V		7h	**562.16836**	1/12	**562.32836**	1/12
		TST>50V		12h	**562.16833**	1/12	**562.32833**	1/12
	>300-500Hz	>50V		2h	**562.16832** [1]	1/12	**562.32832** [1]	1/12
	DC	>50-250V		3h	**562.16834** [2]	1/12	**562.32834** [2]	1/12
		>250V		8h	**562.16838** [2]	1/12	**562.32838** [2]	1/12
3P+E	50Hz 60Hz	100-130V		4h	**562.1672**	1/12	**562.3272**	1/12
		200-250V		9h	**562.1674**	1/12	**562.3274**	1/12
		380-415V		6h	**562.1686**	1/12	**562.3286**	1/12
		380V 50Hz / 440V 60Hz		3h	**562.16864**	1/12	**562.32864**	1/12
		480-500V		7h	**562.16866**	1/12	**562.32866**	1/12
		600-690V		5h	**562.16867** [3]	1/12	**562.32867** [3]	1/12
	60Hz	440-460V		11h	**562.16865**	1/12	**562.32865**	1/12
	100-300Hz	>50V		10h	**562.16861** [1]	1/12	**562.32861** [1]	1/12
	>300-500Hz			2h	**562.16862** [1]	1/12	**562.32862** [1]	1/12
3P+N+E	50Hz 60Hz	100-130V		4h	**562.1679**	1/12	**562.3279**	1/12
		208-250V		9h	**562.1675**	1/12	**562.3275**	1/12
		346-415V		6h	**562.1687**	1/12	**562.3287**	1/12
		380V 50Hz / 440V 60Hz		3h	**562.16874**	1/12	**562.32874**	1/12
		480-500V		7h	**562.16876**	1/12	**562.32876**	1/12
		600-690V		5h	**562.16877** [3]	1/12	**562.32877** [3]	1/12
	60Hz	440-460V		11h	**562.16875**	1/12	**562.32875**	1/12
	>300-500Hz	>50V		2h	**562.16872** [1]	1/12	**562.32872** [1]	1/12

[1] The maximum amount of current available, taking into account the maximum overheating temperature allowed by the relevant standards, must be downgraded with respect to the nominal current by 25% for products with frequencies ranging above 100 Hz; contact Scame Technical Service for further information.

[2] When using DC we recommend that you make sure of implementing the protection scheme that is most suitable for the system involved; contact Scame Technical Service for further information.

[3] Pay special attention when selecting the appropriate fuse with respect to the tension of the installation.

- Supplied with stainless steel fixing screws.
- Open threaded cable entry
- Cable gland included
- Threaded cap/cable sleeve included
- Fuses not supplied

Rated operating voltage >50V >> Standard version [FUSE]

With fuse carrier IP66/ IP67

Poles	Hz	Volt	Colour	h	ADVANCE 2 Series 563. INTERLOCKED SOCKET IP66/IP67 106x240mm M25X1,5 16A		32A		136x390mm M40X1,5 63A	
2P+E	50Hz 60Hz	100-130V		4h	**563.1670**	1/12	**563.3270**	1/12	**563.6370** [4]	1/4
		200-250V		6h	**563.1683**	1/12	**563.3283**	1/12	**563.6383** [4]	1/4
		380-415V		9h	**563.1678**	1/12	**563.3278**	1/12	**563.6378** [5] [4]	1/4
		480-500V		7h	**563.16836**	1/12	**563.32836**	1/12		
		TST>50V		12h	**563.16833**	1/12	**563.32833**	1/12	**563.63833** [4]	1/4
	>300-500Hz	>50V		2h	**563.16832** [1]	1/12	**563.32832** [1]	1/12		
	DC	>50-250V		3h	**563.16834** [2]	1/12	**563.32834** [2]	1/12	**563.63834** [2] [4]	1/4
		>250V		8h	**563.16838** [2]	1/12	**563.32838** [2]	1/12	**563.63838** [2] [4]	1/4
3P+E	50Hz 60Hz	100-130V		4h	**563.1672**	1/12	**563.3272**	1/12	**563.6372** [4]	1/4
		200-250V		9h	**563.1674**	1/12	**563.3274**	1/12	**563.6374** [4]	1/4
		380-415V		6h	**563.1686**	1/12	**563.3286**	1/12	**563.6386** [5] [4]	1/4
		380V 50Hz / 440V 60Hz		3h	**563.16864**	1/12	**563.32864**	1/12		
		480-500V		7h	**563.16866**	1/12	**563.32866**	1/12		
		600-690V		5h	**563.16867** [3]	1/12	**563.32867** [3]	1/12		
	60Hz	440-460V		11h	**563.16865**	1/12	**563.32865**	1/12		
	100-300Hz	>50V		10h	**563.16861** [1]	1/12	**563.32861** [1]	1/12		
	>300-500Hz			2h	**563.16862** [1]	1/12	**563.32862** [1]	1/12		
3P+N+E	50Hz 60Hz	100-130V		4h	**563.1679**	1/12	**563.3279**	1/12	**563.6379** [4]	1/4
		208-250V		9h	**563.1675**	1/12	**563.3275**	1/12	**563.6375** [4]	1/4
		346-415V		6h	**563.1687**	1/12	**563.3287**	1/12	**563.6387** [5] [4]	1/4
		380V 50Hz / 440V 60Hz		3h	**563.16874**	1/12	**563.32874**	1/12		
		480-500V		7h	**563.16876**	1/12	**563.32876**	1/12		
		600-690V		5h	**563.16877** [3]	1/12	**563.32877** [3]	1/12		
	60Hz	440-460V		11h	**563.16875**	1/12	**563.32875**	1/12		
	>300-500Hz	>50V		2h	**563.16872** [1]	1/12	**563.32872** [1]	1/12		

[1] The maximum amount of current available, taking into account the maximum overheating temperature allowed by the relevant standards, must be downgraded with respect to the nominal current by 25% for products with frequencies ranging above 100 Hz; contact Scame Technical Service for further information.

[2] When using DC we recommend that you make sure of implementing the protection scheme that is most suitable for the system involved; contact Scame Technical Service for further information.

[3] Pay special attention when selecting the appropriate fuse with respect to the tension of the installation.

[4] [LARGE] Possibility to enter from the bottom (smooth walls with drilling point mark)

[5] 400V only

- Supplied with stainless steel fixing screws.
- Open threaded cable entry
- Cable gland included
- Threaded cap/cable sleeve included
- Fuses not supplied

Switched interlocked sockets outlets

ADVANCE2 Series

Rated operating voltage >50V >> Standard version [DIN]

					ADVANCE 2 Series			
					567.			
					With DIN rail (6 modules) IP44			
					INTERLOCKED SOCKET			
					IP44			
					136x390mm			
					M25X1,5			
Poles	**Hz**	**Volt**	**Colour**	**h**	16A		32A	
2P+E	50Hz 60Hz	100-130V		4h	**567.1670**	1/4	**567.3270**	1/4
		200-250V		6h	**567.1683**	1/4	**567.3283**	1/4
		380-415V		9h	**567.1678**	1/4	**567.3278**	1/4
		480-500V		7h	**567.16836**	1/4	**567.32836**	1/4
		TST>50V		12h	**567.16833**	1/4	**567.32833**	1/4
	>300-500Hz	>50V		2h	**567.16832** [1]	1/4	**567.32832** [1]	1/4
	DC	>50-250V		3h	**567.16834** [2]	1/4	**567.32834** [2]	1/4
		>250V		8h	**567.16838** [2]	1/4	**567.32838** [2]	1/4
3P+E	50Hz 60Hz	100-130V		4h	**567.1672**	1/4	**567.3272**	1/4
		200-250V		9h	**567.1674**	1/4	**567.3274**	1/4
		380-415V		6h	**567.1686**	1/4	**567.3286**	1/4
		380V 50Hz / 440V 60Hz		3h	**567.16864**	1/4	**567.32864**	1/4
		480-500V		7h	**567.16866**	1/4	**567.32866**	1/4
		600-690V		5h	**567.16867** [3]	1/4	**567.32867** [3]	1/4
	60Hz	440-460V		11h	**567.16865**	1/4	**567.32865**	1/4
	100-300Hz	>50V		10h	**567.16861** [1]	1/4	**567.32861** [1]	1/4
	>300-500Hz			2h	**567.16862** [1]	1/4	**567.32862** [1]	1/4
3P+N+E	50Hz 60Hz	100-130V		4h	**567.1679**	1/4	**567.3279**	1/4
		208-250V		9h	**567.1675**	1/4	**567.3275**	1/4
		346-415V		6h	**567.1687**	1/4	**567.3287**	1/4
		380V 50Hz / 440V 60Hz		3h	**567.16874**	1/4	**567.32874**	1/4
		480-500V		7h	**567.16876**	1/4	**567.32876**	1/4
		600-690V		5h	**567.16877** [3]	1/4	**567.32877** [3]	1/4
	60Hz	440-460V		11h	**567.16875**	1/4	**567.32875**	1/4
	>300-500Hz	>50V		2h	**567.16872** [1]	1/4	**567.32872** [1]	1/4

[1] The maximum amount of current available, taking into account the maximum overheating temperature allowed by the relevant standards, must be downgraded with respect to the nominal current by 25% for products with frequencies ranging above 100 Hz; contact Scame Technical Service for further information.

[2] When using DC we recommend that you make sure of implementing the protection scheme that is most suitable for the system involved; contact Scame Technical Service for further information.

[3] Pay special attention when selecting the appropriate fuse with respect to the tension of the installation.

- Supplied with stainless steel fixing screws.
- Open threaded cable entry
- Cable gland included
- Threaded cap/cable sleeve included
- [LARGE] Possibility to enter from the bottom (smooth walls with drilling point mark)

Rated operating voltage >50V >> Standard version [DIN]

					ADVANCE 2 Series							
					568.							
					With DIN rail (6 modules) IP66/IP67							
					INTERLOCKED SOCKET							
					IP66/IP67							
					136x390mm							
					M25X1,5						M40X1,5	
Poles	**Hz**	**Volt**	**Colour**	**h**	16A		32A				63A	
2P+E	50Hz 60Hz	100-130V		4h	**568.1670**	1/4	**568.3270**	1/4			**568.6370**	1/4
		200-250V		6h	**568.1683**	1/4	**568.3283**	1/4			**568.6383**	1/4
		380-415V		9h	**568.1678**	1/4	**568.3278**	1/4			**568.6378** [4]	1/4
		480-500V		7h	**568.16836**	1/4	**568.32836**	1/4				
		TST>50V		12h	**568.16833**	1/4	**568.32833**	1/4			**568.63833**	1/4
	>300-500Hz	>50V		2h	**568.16832** [1]	1/4	**568.32832** [1]	1/4				
	DC	>50-250V		3h	**568.16834** [2]	1/4	**568.32834** [2]	1/4			**568.63834** [2]	1/4
		>250V		8h	**568.16838** [2]	1/4	**568.32838** [2]	1/4			**568.63838** [2]	1/4
3P+E	50Hz 60Hz	100-130V		4h	**568.1672**	1/4	**568.3272**	1/4			**568.6372**	1/4
		200-250V		9h	**568.1674**	1/4	**568.3274**	1/4			**568.6374**	1/4
		380-415V		6h	**568.1686**	1/4	**568.3286**	1/4			**568.6386** [4]	1/4
		380V 50Hz / 440V 60Hz		3h	**568.16864**	1/4	**568.32864**	1/4				
		480-500V		7h	**568.16866**	1/4	**568.32866**	1/4				
		600-690V		5h	**568.16867** [3]	1/4	**568.32867** [3]	1/4				
	60Hz	440-460V		11h	**568.16865**	1/4	**568.32865**	1/4				
	100-300Hz	>50V		10h	**568.16861** [1]	1/4	**568.32861** [1]	1/4				
	>300-500Hz			2h	**568.16862** [1]	1/4	**568.32862** [1]	1/4				
3P+N+E	50Hz 60Hz	100-130V		4h	**568.1679**	1/4	**568.3279**	1/4			**568.6379**	1/4
		208-250V		9h	**568.1675**	1/4	**568.3275**	1/4			**568.6375**	1/4
		346-415V		6h	**568.1687**	1/4	**568.3287**	1/4			**568.6387** [4]	1/4
		380V 50Hz / 440V 60Hz		3h	**568.16874**	1/4	**568.32874**	1/4				
		480-500V		7h	**568.16876**	1/4	**568.32876**	1/4				
		600-690V		5h	**568.16877** [3]	1/4	**568.32877** [3]	1/4				
	60Hz	440-460V		11h	**568.16875**	1/4	**568.32875**	1/4				
	>300-500Hz	>50V		2h	**568.16872** [1]	1/4	**568.32872** [1]	1/4				

[1] The maximum amount of current available, taking into account the maximum overheating temperature allowed by the relevant standards, must be downgraded with respect to the nominal current by 25% for products with frequencies ranging above 100 Hz; contact Scame Technical Service for further information.

[2] When using DC we recommend that you make sure of implementing the protection scheme that is most suitable for the system involved; contact Scame Technical Service for further information.

[3] Pay special attention when selecting the appropriate fuse with respect to the tension of the installation.

[4] 400V only

- Supplied with stainless steel fixing screws.
- Open threaded cable entry
- Cable gland included
- Threaded cap/cable sleeve included
- [LARGE] Possibility to enter from the bottom (smooth walls with drilling point mark)

Switched interlocked sockets outlets

ADVANCE2 Series

Rated operating voltage >50V >> HD version [HEAVY DUTY]

With fuse carrier IP66/ IP67

					ADVANCE 2 HD Series							
					564.							
					INTERLOCKED SOCKET							
					IP66/IP67							
					106x240mm						136x390mm	
					M25X1,5						M40X1,5	
Poles	**Hz**	**Volt**	**Colour**	**h**	16A			32A			63A	
2P+E	50Hz 60Hz	100-130V		4h	**564.1670**	1/12		**564.3270**	1/12		**564.6370** [4]	1/4
		200-250V		6h	**564.1683**	1/12		**564.3283**	1/12		**564.6383** [4]	1/4
		380-415V		9h	**564.1678**	1/12		**564.3278**	1/12		**564.6378** [5] [4]	1/4
		480-500V		7h	**564.16836**	1/12		**564.32836**	1/12			
		TST>50V		12h	**564.16833**	1/12		**564.32833**	1/12		**564.63833** [4]	1/4
	>300-500Hz	>50V		2h	**564.16832** [1]	1/12		**564.32832** [1]	1/12		**564.63832** [1] [4]	1/4
	DC	>50-250V		3h	**564.16834** [2]	1/12		**564.32834** [2]	1/12		**564.63834** [2] [4]	1/4
		>250V		8h	**564.16838** [2]	1/12		**564.32838** [2]	1/12		**564.63838** [2] [4]	1/4
3P+E	50Hz 60Hz	100-130V		4h	**564.1672**	1/12		**564.3272**	1/12		**564.6372** [4]	1/4
		200-250V		9h	**564.1674**	1/12		**564.3274**	1/12		**564.6374** [4]	1/4
		380-415V		6h	**564.1686**	1/12		**564.3286**	1/12		**564.6386** [5] [4]	1/4
		380V 50Hz / 440V 60Hz		3h	**564.16864**	1/12		**564.32864**	1/12			
		480-500V		7h	**564.16866**	1/12		**564.32866**	1/12			
		600-690V		5h	**564.16867** [3]	1/12		**564.32867** [3]	1/12			
	60Hz	440-460V		11h	**564.16865**	1/12		**564.32865**	1/12			
	100-300Hz	>50V		10h	**564.16861** [1]	1/12		**564.32861** [1]	1/12			
	>300-500Hz			2h	**564.16862** [1]	1/12		**564.32862** [1]	1/12			
3P+N+E	50Hz 60Hz	100-130V		4h	**564.1679**	1/12		**564.3279**	1/12		**564.6379** [4]	1/4
		208-250V		9h	**564.1675**	1/12		**564.3275**	1/12		**564.6375** [4]	1/4
		346-415V		6h	**564.1687**	1/12		**564.3287**	1/12		**564.6387** [5] [4]	1/4
		380V 50Hz / 440V 60Hz		3h	**564.16874**	1/12		**564.32874**	1/12			
		480-500V		7h	**564.16876**	1/12		**564.32876**	1/12			
		600-690V		5h	**564.16877** [3]	1/12		**564.32877** [3]	1/12			
	60Hz	440-460V		11h	**564.16875**	1/12		**564.32875**	1/12			
	>300-500Hz	>50V		2h	**564.16872** [1]	1/12		**564.32872** [1]	1/12			

HD Heavy Duty products are especially suited to grevious working conditions and are also resistant to highly salty environments

[1] The maximum amount of current available, taking into account the maximum overheating temperature allowed by the relevant standards, must be downgraded with respect to the nominal current by 25% for products with frequencies ranging above 100 Hz; contact Scame Technical Service for further information.

[2] When using DC we recommend that you make sure of implementing the protection scheme that is most suitable for the system involved; contact Scame Technical Service for further information.

[3] Pay special attention when selecting the appropriate fuse with respect to the tension of the installation.

[4] [LARGE] Possibility to enter from the bottom (smooth walls with drilling point mark)

[5] 400V only

- Supplied with stainless steel fixing screws.
- Open threaded cable entry
- Cable gland included
- Threaded cap/cable sleeve included

Rated operating voltage >50V >> HD version [HEAVY DUTY]

ADVANCE 2 HD Series

569.

With DIN rail (6 modules) IP66/IP67

INTERLOCKED SOCKET
IP66/IP67
136x390mm

Poles	Hz	Volt	Colour	h	M25X1,5 16A		M25X1,5 32A		M40X1,5 63A	
2P+E	50Hz 60Hz	100-130V		4h	**569.1670**	1/4	**569.3270**	1/4	**569.6370**	1/4
		200-250V		6h	**569.1683**	1/4	**569.3283**	1/4	**569.6383**	1/4
		380-415V		9h	**569.1678**	1/4	**569.3278**	1/4	**569.6378** [4]	1/4
		480-500V		7h	**569.16836**	1/4	**569.32836**	1/4		
		TST>50V		12h	**569.16833**	1/4	**569.32833**	1/4	**569.63833**	1/4
	>300-500Hz	>50V		2h	**569.16832** [1]	1/4	**569.32832** [1]	1/4	**569.63832** [1]	1/4
	DC	>50-250V		3h	**569.16834** [2]	1/4	**569.32834** [2]	1/4	**569.63834** [2]	1/4
		>250V		8h	**569.16838** [2]	1/4	**569.32838** [2]	1/4	**569.63838** [2]	1/4
3P+E	50Hz 60Hz	100-130V		4h	**569.1672**	1/4	**569.3272**	1/4	**569.6372**	1/4
		200-250V		9h	**569.1674**	1/4	**569.3274**	1/4	**569.6374**	1/4
		380-415V		6h	**569.1686**	1/4	**569.3286**	1/4	**569.6386** [4]	1/4
		380V 50Hz / 440V 60Hz		3h	**569.16864**	1/4	**569.32864**	1/4		
		480-500V		7h	**569.16866**	1/4	**569.32866**	1/4		
		600-690V		5h	**569.16867** [3]	1/4	**569.32867** [3]	1/4		
	60Hz	440-460V		11h	**569.16865**	1/4	**569.32865**	1/4		
	100-300Hz	>50V		10h	**569.16861** [1]	1/4	**569.32861** [1]	1/4		
	>300-500Hz			2h	**569.16862** [1]	1/4	**569.32862** [1]	1/4		
3P+N+E	50Hz 60Hz	100-130V		4h	**569.1679**	1/4	**569.3279**	1/4	**569.6379**	1/4
		208-250V		9h	**569.1675**	1/4	**569.3275**	1/4	**569.6375**	1/4
		346-415V		6h	**569.1687**	1/4	**569.3287**	1/4	**569.6387** [4]	1/4
		380V 50Hz / 440V 60Hz		3h	**569.16874**	1/4	**569.32874**	1/4		
		480-500V		7h	**569.16876**	1/4	**569.32876**	1/4		
		600-690V		5h	**569.16877** [3]	1/4	**569.32877** [3]	1/4		
	60Hz	440-460V		11h	**569.16875**	1/4	**569.32875**	1/4		
	>300-500Hz	>50V		2h	**569.16872** [1]	1/4	**569.32872** [1]	1/4		

HD Heavy Duty products are especially suited to grevious working conditions and are also resistant to highly salty environments

[1] The maximum amount of current available, taking into account the maximum overheating temperature allowed by the relevant standards, must be downgraded with respect to the nominal current by 25% for products with frequencies ranging above 100 Hz; contact Scame Technical Service for further information.

[2] When using DC we recommend that you make sure of implementing the protection scheme that is most suitable for the system involved; contact Scame Technical Service for further information.

[3] Pay special attention when selecting the appropriate fuse with respect to the tension of the installation.

[4] 400V only

- Supplied with stainless steel fixing screws.
- Open threaded cable entry
- Cable gland included
- Threaded cap/cable sleeve included
- [LARGE] Possibility to enter from the bottom (smooth walls with drilling point mark)

Switched interlocked sockets outlets

ADVANCE2 Series

Rated operating voltage <50V

ADVANCE 2 Series

565.

Version with safety transformer

				INTERLOCKED SOCKET							
				IP44				IP66/IP67			
				106x240mm		136x390mm		106x240mm		136x390mm	
Current	**Poles**	**Volt**	**Colour**	M25X1,5							
16A	2P	24V		**565.2416**	1/10	**565.2516** [1][2]	1/4	**565.2416/S**	1/10	**565.2516/S** [1][2]	1/4

SELV transformer 220/24V~ 150VA (continuous duty).

[1] [LARGE] Possibility to enter from the bottom (smooth walls with drilling point mark)

[2] Provided protections: primary circuit (2A), secondary circuit (6A), fuses included.

- Supplied with stainless steel fixing screws.
- When plug is inserted a micro-switch is activated and closes the circuit
- Open threaded cable entry
- Cable gland included
- Threaded cap/cable sleeve included

ADVANCE 2 HD Series

566.

Version with safety transformer (HD - Heavy Duty)

				INTERLOCKED SOCKET							
				IP44				IP66/IP67			
				106x240mm		136x390mm		106x240mm		136x390mm	
Current	**Poles**	**Volt**	**Colour**	M25X1,5							
16A	2P	24V		**566.2416**	1/10	**566.2516** [1][2]	1/4	**566.2416/S**	1/10	**566.2516/S** [1][2]	1/4

Heavy Duty products are especially suited to grevious working conditions and are also resistant to highly salty environments

SELV transformer 220/24V~ 150VA (continuous duty).

[1] [LARGE] Possibility to enter from the bottom (smooth walls with drilling point mark)

[2] Provided protections: primary circuit (2A), secondary circuit (6A), fuses included.

- Supplied with stainless steel fixing screws.
- When plug is inserted a micro-switch is activated and closes the circuit
- Open threaded cable entry
- Cable gland included
- Threaded cap/cable sleeve included

Rated operating voltage <50V

					ADVANCE 2 Series			
					565.			
					Version with DIN rail (6 modules)			
					INTERLOCKED SOCKET			
					IP44		IP66/IP67	
					106x240mm			
Current	**Poles**	**Volt**	**Colour**	**h**	M25X1,5			
16A	2P	20-25V			**565.2420**	1/10	**565.2420/S**	1/10
		40-50V		12h	**565.2421**	1/10	**565.2421/S**	1/10
32A		20-25V			**565.2432**	1/10	**565.2432/S**	1/10
		40-50V		12h	**565.2433**	1/10	**565.2433/S**	1/10

- Supplied with stainless steel fixing screws.
- When plug is inserted a micro-switch is activated and closes the circuit
- Open threaded cable entry
- Cable gland included
- Threaded cap/cable sleeve included

					ADVANCE 2 HD Series			
					566.			
					Version with DIN rail (6 modules) (HD - Heavy Duty)			
					INTERLOCKED SOCKET			
					IP44		IP66/IP67	
					106x240mm			
Current	**Poles**	**Volt**	**Colour**	**h**	M25X1,5			
16A	2P	20-25V			**566.2420**	1/10	**566.2420/S**	1/10
		40-50V		12h	**566.2421**	1/10	**566.2421/S**	1/10
32A		20-25V			**566.2432**	1/10	**566.2432/S**	1/10
		40-50V		12h	**566.2433**	1/10	**566.2433/S**	1/10

HD Heavy Duty products are especially suited to grevious working conditions and are also resistant to highly salty environments

- Supplied with stainless steel fixing screws.
- When plug is inserted a micro-switch is activated and closes the circuit
- Open threaded cable entry
- Cable gland included
- Threaded cap/cable sleeve included

Switched interlocked sockets outlets

ADVANCE2 System

Standard version >> Compact module 106

						ADVANCE 2 System 576.			
Description	**Version**	**IP**	**Notes**	**Dimension**	**Power**	**Modular bases**		**Enclosures**	
CONSUMER UNIT		IP66	10 DIN	212x150x110mm	14W				
			4 DIN	106x150x110mm	8W				
JUNCTION BOX 106	CUT-OUT SINGLE		16/32A	106x150x105mm					
	ONE-MODULE BLANK							**576.4301** [1]	12
	TWO-MODULE BLANK			212x150x105mm					
MODULAR BASE 106			16-32A	106x434x18mm		**576.4300**	12		

[1] Metric break-through cable entry

[2] Power dissipation calculated in conformity with CEI 23-49 italian standards

Standard version >> Large module 136

						ADVANCE 2 System 576.			
Description	**Version**	**IP**	**Notes**	**Dimension**	**Power**	**Modular bases**		**Enclosures**	
CONSUMER UNIT		IP66	13 DIN	272x150x110mm	17W				
			6 DIN	136x150x110mm	9W				
JUNCTION BOX 136	CUT-OUT SINGLE		16/32A	136x150x105mm					
	ONE-MODULE BLANK							**576.4321** [1]	12
	TWO-MODULE BLANK			272x150x105mm					
MODULAR BASE 136			16-32-63A	136x584x18mm		**576.4340**	6		
ENCLOSURE FOR SWITCH		IP66	ADVANCE2	136x150x105mm					

[1] Metric break-through cable entry

[2] For fitting with Y1 switch size panel mounting version (R) and relevant front operators handless (IP65).

[3] Power dissipation calculated in conformity with CEI 23-49 italian standards

ADVANCE 2 System

576.

Consumer units

576.4302 2 1	6

Enclosures

576.4303 1	12

Enclosures

576.4304 1	6

Consumer units

576.4305 2 1	6

ADVANCE 2 System

576.

Consumer units

576.4322 3 1	6

Enclosures

576.4323 1	12

Enclosures

576.4324 1	6

Consumer units

576.4325 3 1	6

Enclosures

576.4390 2 1	6

Switched interlocked sockets outlets

ADVANCE2 System

HD version >> Compact module 106 HD - Heavy Duty

						ADVANCE 2 HD System 578.	
Description	**Version**	**IP**	**Notes**	**Dimension**	**Power**	**Modular bases**	**Enclosures**
CONSUMER UNIT		IP66	10 DIN	212x150x110mm	14W		
			4 DIN	106x150x110mm	8W		
JUNCTION BOX 106	ONE-MODULE BLANK			106x150x105mm			**578.4301** [1] 12
	TWO-MODULE BLANK						
MODULAR BASE 106			16-32A	106x434x18mm		**578.4300** 12	

Heavy Duty products are especially suited to grevious working conditions and are also resistant to highly salty environments

[1] Metric break-through cable entry

[2] Power dissipation calculated in conformity with CEI 23-49 italian standards

HD version >> Large module 136 HD - Heavy Duty

						ADVANCE 2 HD System 578.	
Description	**Version**	**IP**	**Notes**	**Dimension**	**Power**	**Modular bases**	**Enclosures**
CONSUMER UNIT		IP66	13 DIN	272x150x110mm	17W		
			6 DIN	136x150x110mm	9W		
JUNCTION BOX 136	ONE-MODULE BLANK			136x150x105mm			**578.4321** [1] 12
	TWO-MODULE BLANK			272x150x105mm			
MODULAR BASE 136			16-32-63A	136x584x18mm		**578.4340** 6	

Heavy Duty products are especially suited to grevious working conditions and are also resistant to highly salty environments

[1] Metric break-through cable entry

[2] Power dissipation calculated in conformity with CEI 23-49 italian standards

ADVANCE 2 HD System

578.

Consumer units

578.4302 2 1 6

Enclosures

578.4304 1 6

Consumer units

578.4305 2 1 6

ADVANCE 2 HD System

578.

Consumer units

578.4322 2 1 6

Enclosures

578.4324 1 6

Consumer units

578.4325 2 1 6

Switched interlocked sockets outlets

ADVANCE2 System

Modular system for combination units - IP66

ENCLOSURES ACCESSORIES

654.

Description	Kit accessories
TRIANGULAR LOCK KIT	**654.0079** 1/10

TOP22 Series

590.

Description	Colour	Switch size	Contact blocks
NC CONTACT		Y1	**590.PL004001** [1] 10/60
		Y2	**590.PL004003** [1] 10
NO CONTACT		Y1	**590.PL004002** [2] 10/60
		Y2	**590.PL004004** [2] 10

[1] NC=Normally closed

[2] NO=Normally open

- Snap catch

Without base IP66/IP67/IP69

ADVANCE GRP Series

402.

Without fuse carrier

					INTERLOCKED SOCKET IP66/IP67/IP69					
					130x260mm				170x380mm	
Poles	**Hz**	**Volt**	**Colour**	**h**	16A		32A		63A	
2P+E	50Hz 60Hz	100-130V		4h	**402.1670**	1/6	**402.3270**	1	**402.6370**	1
		200-250V		6h	**402.1683**	1/6	**402.3283**	1/6	**402.6383**	1
		380-415V		9h	**402.1678**	1	**402.3278**	1	**402.6378**	1
		480-500V		7h	**402.16836**	1	**402.32836**	1	**402.63836**	1
		TST>50V		12h	**402.16833**	1/6	**402.32833**	1	**402.63833**	1
	>300-500Hz	>50V		2h	**402.16832** [1]	1	**402.32832** [1]	1	**402.63832** [1]	1
3P+E	50Hz 60Hz	100-130V		4h	**402.1672**	1	**402.3272**	1/6	**402.6372**	1
		200-250V		9h	**402.1674**	1/6	**402.3274**	1/6	**402.6374**	1
		380-415V		6h	**402.1686**	1/6	**402.3286**	1/6	**402.6386**	1
		380V 50Hz / 440V 60Hz		3h	**402.16864**	1	**402.32864**	1/6	**402.63864**	1
		480-500V		7h	**402.16866**	1/6	**402.32866**	1/6	**402.63866**	1
		600-690V		5h	**402.16867** [2]	1/6	**402.32867** [2]	1	**402.63867** [2]	1
	60Hz	440-460V		11h	**402.16865**	1	**402.32865**	1/6	**402.63865**	1
	100-300Hz	>50V		10h	**402.16861** [1]	1	**402.32861** [1]	1	**402.63861** [1]	1
	>300-500Hz			2h	**402.16862** [1]	1	**402.32862** [1]	1/6	**402.63862** [1]	1
3P+N+E	50Hz 60Hz	100-130V		4h	**402.1679**	1	**402.3279**	1	**402.6379**	1
		208-250V		9h	**402.1675**	1	**402.3275**	1	**402.6375**	1
		346-415V		6h	**402.1687**	1/6	**402.3287**	1/6	**402.6387**	1
		380V 50Hz / 440V 60Hz		3h	**402.16874**	1	**402.32874**	1	**402.63874**	1
		480-500V		7h	**402.16876**	1	**402.32876**	1	**402.63876**	1
		600-690V		5h	**402.16877** [2]	1	**402.32877** [2]	1	**402.63877** [2]	1
	60Hz	440-460V		11h	**402.16875**	1	**402.32875**	1	**402.63875**	1
	>300-500Hz	>50V		2h	**402.16872** [1]	1	**402.32872** [1]	1	**402.63872** [1]	1

[1] The maximum amount of current available, taking into account the maximum overheating temperature allowed by the relevant standards, must be downgraded with respect to the nominal current by 25% for products with frequencies ranging above 100 Hz; contact Scame Technical Service for further information.

[2] Pay special attention when selecting the appropriate fuse with respect to the tension of the installation.

- Supplied with stainless steel fixing screws.
- Empty base: ADVANCE-GRP System (fam. 579)

Switched interlocked sockets outlets

ADVANCE-GRP Series

Without base IP66/IP67/IP69

Without fuse carrier [With "i-Device"]

					ADVANCE GRP Series					
					403.					
					INTERLOCKED SOCKET IP66/IP67/IP69					
					130x260mm				170x380mm	
Poles	**Hz**	**Volt**	**Colour**	**h**	16A		32A		63A	
2P+E	50Hz 60Hz	100-130V		4h	**403.1670**	1/6	**403.3270**	1/6	**403.6370**	1
		200-250V		6h	**403.1683**	1/6	**403.3283**	1/6	**403.6383**	1
		380-415V		9h	**403.1678**	1	**403.3278**	1	**403.6378**	1
		480-500V		7h	**403.16836**	1	**403.32836**	1	**403.63836**	1
		TST>50V		12h	**403.16833**	1	**403.32833**	1	**403.63833**	1
	>300-500Hz	>50V		2h	**403.16832** [1]	1	**403.32832** [1]	1	**403.63832** [1]	1
3P+E	50Hz 60Hz	100-130V		4h	**403.1672**	1	**403.3272**	1	**403.6372**	1
		200-250V		9h	**403.1674**	1/6	**403.3274**	1	**403.6374**	1
		380-415V		6h	**403.1686**	1/6	**403.3286**	1/6	**403.6386**	1
		380V 50Hz / 440V 60Hz		3h	**403.16864**	1	**403.32864**	1/6	**403.63864**	1
		480-500V		7h	**403.16866**	1	**403.32866**	1	**403.63866**	1
		600-690V		5h	**403.16867** [2]	1	**403.32867** [2]	1	**403.63867** [2]	1
	60Hz	440-460V		11h	**403.16865**	1	**403.32865**	1	**403.63865**	1
	100-300Hz	>50V		10h	**403.16861** [1]	1	**403.32861** [1]	1	**403.63861** [1]	1
	>300-500Hz			2h	**403.16862** [1]	1	**403.32862** [1]	1	**403.63862** [1]	1
3P+N+E	50Hz 60Hz	100-130V		4h	**403.1679**	1	**403.3279**	1	**403.6379**	1
		208-250V		9h	**403.1675**	1	**403.3275**	1	**403.6375**	1
		346-415V		6h	**403.1687**	1/6	**403.3287**	1/6	**403.6387**	1
		380V 50Hz / 440V 60Hz		3h	**403.16874**	1	**403.32874**	1	**403.63874**	1
		480-500V		7h	**403.16876**	1	**403.32876**	1	**403.63876**	1
		600-690V		5h	**403.16877** [2]	1	**403.32877** [2]	1	**403.63877** [2]	1
	60Hz	440-460V		11h	**403.16875**	1	**403.32875**	1	**403.63875**	1
	>300-500Hz	>50V		2h	**403.16872** [1]	1	**403.32872** [1]	1	**403.63872** [1]	1

[1] The maximum amount of current available, taking into account the maximum overheating temperature allowed by the relevant standards, must be downgraded with respect to the nominal current by 25% for products with frequencies ranging above 100 Hz; contact Scame Technical Service for further information.

[2] Pay special attention when selecting the appropriate fuse with respect to the tension of the installation.

- Supplied with stainless steel fixing screws.
- Empty base: ADVANCE-GRP System (fam. 579)
- [i-Device]: an electronic device controls ("Intelligence Device") the status of the interlocked socket, monitoring the electrical functionality.

Without base IP66/IP67/IP69

ADVANCE GRP Series

402.

With fuse carrier

					INTERLOCKED SOCKET IP66/IP67/IP69					
					130x260mm				170x380mm	
Poles	**Hz**	**Volt**	**Colour**	**h**	16A		32A		63A	
2P+E	50Hz 60Hz	100-130V		4h	**402.1670-F**	1/6	**402.3270-F**	1	**402.6370-F**	1
		200-250V		6h	**402.1683-F**	1/6	**402.3283-F**	1/6	**402.6383-F**	1
		380-415V		9h	**402.1678-F**	1	**402.3278-F**	1	**402.6378-F**	1
		480-500V		7h	**402.16836-F**	1	**402.32836-F**	1	**402.63836-F**	1
		TST>50V		12h	**402.16833-F**	1	**402.32833-F**	1	**402.63833-F**	1
	>300-500Hz	>50V		2h	**402.16832-F**[1]	1	**402.32832-F**[1]	1	**402.63832-F**[1]	1
3P+E	50Hz 60Hz	100-130V		4h	**402.1672-F**	1	**402.3272-F**	1	**402.6372-F**	1
		200-250V		9h	**402.1674-F**	1/6	**402.3274-F**	1	**402.6374-F**	1
		380-415V		6h	**402.1686-F**	1/6	**402.3286-F**	1/6	**402.6386-F**	1
		380V 50Hz / 440V 60Hz		3h	**402.16864-F**	1	**402.32864-F**	1/6	**402.63864-F**	1
		480-500V		7h	**402.16866-F**	1	**402.32866-F**	1	**402.63866-F**	1
		600-690V		5h	**402.16867-F**[2]	1/6	**402.32867-F**[2]	1	**402.63867-F**[2]	1
	60Hz	440-460V		11h	**402.16865-F**	1	**402.32865-F**	1/6	**402.63865-F**	1
	100-300Hz	>50V		10h	**402.16861-F**[1]	1	**402.32861-F**[1]	1	**402.63861-F**[1]	1
	>300-500Hz			2h	**402.16862-F**[1]	1	**402.32862-F**[1]	1	**402.63862-F**[1]	1
3P+N+E	50Hz 60Hz	100-130V		4h	**402.1679-F**	1	**402.3279-F**	1	**402.6379-F**	1
		208-250V		9h	**402.1675-F**	1/6	**402.3275-F**	1/6	**402.6375-F**	1
		346-415V		6h	**402.1687-F**	1/6	**402.3287-F**	1/6	**402.6387-F**	1
		380V 50Hz / 440V 60Hz		3h	**402.16874-F**	1	**402.32874-F**	1/6	**402.63874-F**	1
		480-500V		7h	**402.16876-F**	1	**402.32876-F**	1	**402.63876-F**	1
		600-690V		5h	**402.16877-F**[2]	1	**402.32877-F**[2]	1	**402.63877-F**[2]	1
	60Hz	440-460V		11h	**402.16875-F**	1	**402.32875-F**	1/6	**402.63875-F**	1
	>300-500Hz	>50V		2h	**402.16872-F**[1]	1	**402.32872-F**[1]	1	**402.63872-F**[1]	1

[1] The maximum amount of current available, taking into account the maximum overheating temperature allowed by the relevant standards, must be downgraded with respect to the nominal current by 25% for products with frequencies ranging above 100 Hz; contact Scame Technical Service for further information.

[2] Pay special attention when selecting the appropriate fuse with respect to the tension of the installation.

- Supplied with stainless steel fixing screws.
- Empty base: ADVANCE-GRP System (fam. 579)

Switched interlocked sockets outlets

ADVANCE-GRP Series

Without base IP66/IP67/IP69

With fuse carrier [With "i-Device"]

					ADVANCE GRP Series							
					403.							
					INTERLOCKED SOCKET							
					IP66/IP67/IP69							
					130x260mm						170x380mm	
Poles	**Hz**	**Volt**	**Colour**	**h**	16A		32A				63A	
2P+E	50Hz 60Hz	100-130V		4h	**403.1670-F**	1	**403.3270-F**	1/6			**403.6370-F**	1
		200-250V		6h	**403.1683-F**	1/6	**403.3283-F**	1/6			**403.6383-F**	1
		380-415V		9h	**403.1678-F**	1/6	**403.3278-F**	1			**403.6378-F**	1
		480-500V		7h	**403.16836-F**	1	**403.32836-F**	1			**403.63836-F**	1
		TST>50V		12h	**403.16833-F**	1	**403.32833-F**	1			**403.63833-F**	1
	>300-500Hz	>50V		2h	**403.16832-F** [1]	1	**403.32832-F** [1]	1			**403.63832-F** [1]	1
3P+E	50Hz 60Hz	100-130V		4h	**403.1672-F**	1	**403.3272-F**	1			**403.6372-F**	1
		200-250V		9h	**403.1674-F**	1	**403.3274-F**	1			**403.6374-F**	1
		380-415V		6h	**403.1686-F**	1/6	**403.3286-F**	1/6			**403.6386-F**	1
		380V 50Hz / 440V 60Hz		3h	**403.16864-F**	1	**403.32864-F**	1			**403.63864-F**	1
		480-500V		7h	**403.16866-F**	1	**403.32866-F**	1			**403.63866-F**	1
		600-690V		5h	**403.16867-F** [2]	1	**403.32867-F** [2]	1			**403.63867-F** [2]	1
	60Hz	440-460V		11h	**403.16865-F**	1	**403.32865-F**	1			**403.63865-F**	1
	100-300Hz	>50V		10h	**403.16861-F** [1]	1	**403.32861-F** [1]	1			**403.63861-F** [1]	1
	>300-500Hz			2h	**403.16862-F** [1]	1	**403.32862-F** [1]	1			**403.63862-F** [1]	1
3P+N+E	50Hz 60Hz	100-130V		4h	**403.1679-F**	1	**403.3279-F**	1			**403.6379-F**	1
		208-250V		9h	**403.1675-F**	1	**403.3275-F**	1			**403.6375-F**	1
		346-415V		6h	**403.1687-F**	1/6	**403.3287-F**	1/6			**403.6387-F**	1
		380V 50Hz / 440V 60Hz		3h	**403.16874-F**	1	**403.32874-F**	1/6			**403.63874-F**	1
		480-500V		7h	**403.16876-F**	1	**403.32876-F**	1			**403.63876-F**	1
		600-690V		5h	**403.16877-F** [2]	1	**403.32877-F** [2]	1			**403.63877-F** [2]	1
	60Hz	440-460V		11h	**403.16875-F**	1	**403.32875-F**	1			**403.63875-F**	1
	>300-500Hz	>50V		2h	**403.16872-F** [1]	1	**403.32872-F** [1]	1			**403.63872-F** [1]	1

[1] The maximum amount of current available, taking into account the maximum overheating temperature allowed by the relevant standards, must be downgraded with respect to the nominal current by 25% for products with frequencies ranging above 100 Hz; contact Scame Technical Service for further information.

[2] Pay special attention when selecting the appropriate fuse with respect to the tension of the installation.

- Supplied with stainless steel fixing screws.
- Empty base: ADVANCE-GRP System (fam. 579)
- [i-Device]: an electronic device controls ("Intelligence Device") the status of the interlocked socket, monitoring the electrical functionality.

Without base IP66/IP67/IP69

					ADVANCE GRP Series					
					403.					
					With MCB					
					INTERLOCKED SOCKET					
					IP66/IP67/IP69					
					130x260mm				170x380mm	
Poles	**Hz**	**Volt**	**Colour**	**h**	16A		32A		63A	
2P+E	50Hz 60Hz	100-130V		4h	**403.1670-M**	1/6	**403.3270-M**	1/6	**403.6370-M**	1
		200-250V		6h	**403.1683-M**	1/6	**403.3283-M**	1/6	**403.6383-M**	1
		380-415V		9h	**403.1678-M**	1/6	**403.3278-M**	1/6	**403.6378-M**	1
3P+E		100-130V		4h	**403.1672-M**	1/6	**403.3272-M**	1/6	**403.6372-M**	1
		200-250V		9h	**403.1674-M**	1/6	**403.3274-M**	1/6	**403.6374-M**	1
		380-415V		6h	**403.1686-M**	1/6	**403.3286-M**	1/6	**403.6386-M**	1
		380V 50Hz / 440V 60Hz		3h	**403.16864-M**	1	**403.32864-M**	1	**403.63864-M**	1
	60Hz	440-460V		11h	**403.16865-M**	1	**403.32865-M**	1	**403.63865-M**	1
3P+N+E	50Hz 60Hz	100-130V		4h	**403.1679-M**	1/6	**403.3279-M**	1/6	**403.6379-M**	1
		208-250V		9h	**403.1675-M**	1/6	**403.3275-M**	1/6	**403.6375-M**	1
		346-415V		6h	**403.1687-M**	1/6	**403.3287-M**	1/6	**403.6387-M**	1
		380V 50Hz / 440V 60Hz		3h	**403.16874-M**	1	**403.32874-M**	1	**403.63874-M**	1
	60Hz	440-460V		11h	**403.16875-M**	1	**403.32875-M**	1	**403.63875-M**	1

☼ With power indicating led

- MCB = Miniature circuit breaker with thermal magnetic trip unit
- Supplied with stainless steel fixing screws.
- Empty base: ADVANCE-GRP System (fam. 579)

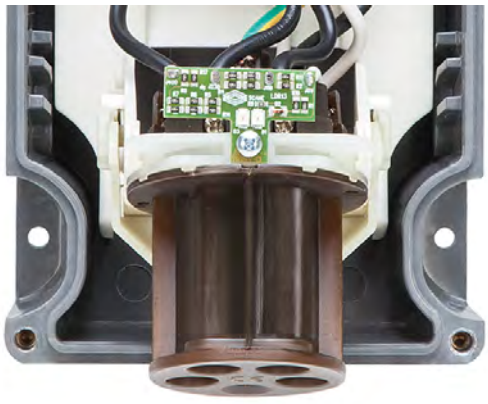

Voltage presence indicator led

Switched interlocked sockets outlets

ADVANCE-GRP Series

Surface mounting IP66 (125A)

Current	Poles	Hz	Volt	Colour	h	Ex	ADVANCE GRP Series 503. With switch-disconnector [With "i-Device"] INTERLOCKED SOCKET IP66	
125A	2P+E	50Hz 60Hz	200-250V		6h	II 3D	**503.12583**	1
	3P+E		380-415V				**503.12586**	1
		60Hz	440-460V		11h		**503.125865**	1
	3P+N+E	50Hz 60Hz	346-415V		6h		**503.12587**	1

- Blank side with drilling point mark
- [i-Device]: an electronic device controls ("Intelligence Device") the status of the interlocked socket, monitoring the electrical functionality.

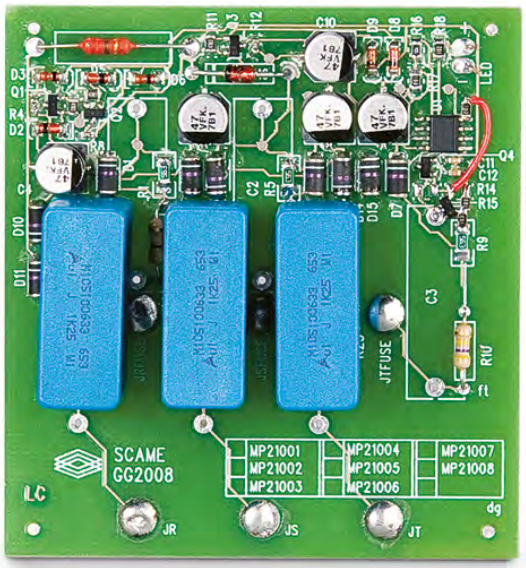

i-Device
An electronic device controls (*Intelligence Device*) the status of the interlocked socket, monitoring the electrical functionality:
- operation of the signalling and control card is guaranteed even when the load is not connected;

INDICATOR LIGHT ON
- indicates that the fuses are not open and all the phases are present;
- indicates that the socket outlet is powered correctly;

INDICATOR LIGHT FLASHING
- signals the interruption of one or more fuses;
- signals the absence of a phase(*);

INDICATOR LIGHT OFF
- indicates that the socket outlet is not powered.

(*) For single-phase products in the event of phase/neutral loss led signaling appears off.

Surface mounting IP66 (125A)

With switch-disconnector and fuse [With "i-Device"]

Current	Poles	Hz	Volt	Colour	h	Ex	ADVANCE GRP Series 503. INTERLOCKED SOCKET IP66	
125A	2P+E	50Hz 60Hz	>50-250V		3h		**503.125834-F** [1]	1
			200-250V		6h	II 3D	**503.12583-F**	1
	3P+E		380-415V				**503.12586-F**	1
	3P+N+E		346-415V				**503.12587-F**	1

[1] When using DC we recommend that you make sure of implementing the protection scheme that is most suitable for the system involved; contact Scame Technical Service for further information.

- Blank side with drilling point mark
- [i-Device]: an electronic device controls ("Intelligence Device") the status of the interlocked socket, monitoring the electrical functionality.

With fuse and switch [With "i-Device"]

Current	Poles	Hz	Volt	Colour	h	Ex	ADVANCE GRP Series 503. INTERLOCKED SOCKET IP66	
125A	2P+E	50Hz 60Hz	200-250V		6h	II 3D	**503.12583-FS**	1
	3P+E		380-415V				**503.12586-FS**	1
	3P+N+E		346-415V				**503.12587-FS**	1

- Blank side with drilling point mark
- [i-Device]: an electronic device controls ("Intelligence Device") the status of the interlocked socket, monitoring the electrical functionality.

Switched interlocked sockets outlets

ADVANCE-GRP Series

Surface mounting IP66 (125A)

							ADVANCE GRP Series	
							503.	
							With MCCB [With "i-Device"]	
							INTERLOCKED SOCKET	
Current	**Poles**	**Hz**	**Volt**	**Colour**	**h**	**Ex**	IP66	
125A	2P+E	50Hz 60Hz	200-250V		6h	II 3D	**503.12583-M**	1
	3P+E		380-415V				**503.12586-M**	1
	3P+N+E		346-415V				**503.12587-M**	1

- MCCB = Molded case circuit breaker with thermal magnetic trip unit
- Blank side with drilling point mark
- [i-Device]: an electronic device controls ("Intelligence Device") the status of the interlocked socket, monitoring the electrical functionality.

							ADVANCE GRP Series	
							503.	
							With MCCB & RCD [With "i-Device"]	
							INTERLOCKED SOCKET	
Current	**Poles**	**Hz**	**Volt**	**Colour**	**h**	**Ex**	IP66	
125A	2P+E	50Hz 60Hz	200-250V		6h	II 3D	**503.12583-RM**	1
	3P+E		380-415V				**503.12586-RM**	1
	3P+N+E		346-415V				**503.12587-RM**	1

- MCCB & RCD = Molded case circuit breaker with thermal magnetic and residual current release trip unit
- Blank side with drilling point mark
- [i-Device]: an electronic device controls ("Intelligence Device") the status of the interlocked socket, monitoring the electrical functionality.

Surface mounting IP66 (125A)

							ADVANCE GRP Series	
							503.	
							With contactor [With "i-Device"]	
							INTERLOCKED SOCKET	
Current	**Poles**	**Hz**	**Volt**	**Colour**	**h**	**Ex**	IP66	
125A	2P+E	50Hz 60Hz	200-250V		6h	II 3D	**503.12583-T**	1
	3P+E		380-415V				**503.12586-T**	1
	3P+N+E		346-415V				**503.12587-T**	1

- Blank side with drilling point mark
- [i-Device]: an electronic device controls ("Intelligence Device") the status of the interlocked socket, monitoring the electrical functionality.

APPLICATION EXAMPLE

Switched interlocked sockets outlets

ADVANCE-GRP Series

Extra low voltage <50V - IP66/IP67/IP69

				ADVANCE-GRP[<50V] Series			
				403.			
				Version with safety transformer - Panel mounting			
				INTERLOCKED SOCKET			
				IP66/IP67/IP69			
				130x260mm			
Poles	**Volt**	**Colour**	**h**	16A		32A	
2P	20-25V			**403.2420**	1/6	**403.2620**	1/6
	24V			**403.2416** ⛨	1/6		
	40-50V		12h	**403.2421**	1/6	**403.2621**	1/6

⛨ SELV transformer 220/24V~ 150VA (continuous duty).

- For the choice of bases, refer to the 16A-32A module.
- Supplied with stainless steel fixing screws.
- When plug is inserted a micro-switch is activated and closes the circuit
- Empty base: ADVANCE-GRP System (fam. 579)

AS panels
Example of Mega Panel available in customized configuration.

Empty bases IP66/IP67/IP69

		ADVANCE-GRP System	
		579.	
		Empty base 16A-32A	**Empty base 63A**
		MODULAR BASES	
Notes	**Dimension**	IP66/IP67/IP69	
16A-32A	130x260mm	**579.5100** 1	
63A	170x380mm		**579.5200** 1

- Power dissipation calculated in conformity with CEI 23-49 italian standards
- IP66/IP67/IP69 when coupled with the respective component.
- Blank side with drilling point mark

			ADVANCE-GRP System		
			579.		
			Empty base 16-32A with junction box	**Empty base 16-32A with junction box (double)**	**Empty base 63A with junction box**
			MODULAR BASES		
Notes	**Dimension**	**Power**	IP66/IP67/IP69		
16A-32A	130x460mm	9W	**579.5110** 1		
	260x460mm	16W		**579.5120** 1	
63A	170x580mm	9W			**579.5210** 1

- Power dissipation calculated in conformity with CEI 23-49 italian standards
- IP66/IP67/IP69 when coupled with the respective component.
- Blank side with drilling point mark

Switched interlocked sockets outlets

ADVANCE-GRP System

Empty bases IP66/IP67/IP69

			ADVANCE-GRP System		
			579.		
			Empty base 16-32A with DIN rail	**Empty base 16-32A with DIN rail (double)**	**Empty base 63A with DIN rail**
			MODULAR BASES		
Notes	**Dimension**	**Power**	IP66/IP67/IP69		
16A-32A - 13 DIN	260x460mm	16W		**579.5121** 1	
16A-32A - 6 DIN	130x460mm	13W	**579.5111** 1		
63A - 8 DIN	170x580mm				**579.5211** 1

- Power dissipation calculated in conformity with CEI 23-49 italian standards
- IP66/IP67/IP69 when coupled with the respective component.
- Blank side with drilling point mark

APPLICATION EXAMPLE

Modular system - IP66

ADVANCE-GRP System

579.

Modular plate

	MODULAR PLATE				
Dimension	2x16-32A + 1x63A	2x16-32A + 2x63A	3x16-32A	3x16-32A + 1x63A	4x16-32A
390x555mm			**579.0030**		
430x685mm	**579.0021**				
520x555mm					**579.0040**
560x685mm				**579.0031**	
610x685mm		**579.0022**			

579.0021
Composition example: 3x16-32A

579.0031
Composition example: 3x16-32A + 1x63A

Switched interlocked sockets outlets
ADVANCE-GRP System

Accessories

			ADVANCE-GRP System		
			579.		
Description	**Cable outlet**	**Current**	**Kit microswitch**	**Junction box kit**	**Coupling kit**
ADAPTOR COUPLING KIT	M32X1,5				**579.0332** [4][5] 12
MICROSWITCH KIT		16A 32A 63A	**579.0100** [1][2] 12		
		125A	**579.0125** [3][1] 1		
JUNCTION_BOX KIT	M40X1,5			**579.0200** [4][5] 1/12	
	M50X1,5			**579.0201** [4][5] 1/12	

[1] For plug-inserted control; not suitable for electrically interlocked socket.
[2] Max 1 kit for 16A-32A sockets; Max 2 kit for 63A sockets.
[3] Max. 2 kits
[4] Includes cable gland and gasket
[5] IP66/IP67/IP69 when coupled with the respective component.

Modular system - IP66

			TOP22 Series	
			590.	
Description	**Colour**	**Switch size**	**Contact blocks**	
NC CONTACT		Y1	**590.PL004001** [1]	10/60
		Y2	**590.PL004003** [1]	10
NO CONTACT		Y1	**590.PL004002** [2]	10/60
		Y2	**590.PL004004** [2]	10

[1] NC=Normally closed
[2] NO=Normally open
- Snap catch

Modular system - IP66

			ADVANCE-GRP System		
			579.		
Description	**IP**	**Notes**	**Accessories**		
BLANK PLATE FOR DIN MODULES					**579.0450** 10
BASE BLANK COVER	IP66/IP67/IP69	16A-32A		**579.5001** [2] 10	
SCREW KNOBS KIT			**579.0400** [1] 12		

[1] For bases with control units instead of screws for closing the doors

[2] Cover used to close the socket compartment; allows other devices to be installed

1.4

Plugs and sockets for special applications

- AMR System - Automated Meter Reading
- Plugs and sockets for industrial applications <50V~
- Events and exhibitions products
- Industrial plugs and sockets for military use
- Plugs and sockets UL/CSA
- Seven poles plugs and sockets
- OPTIMA-METAL Series - Industrial connectors

PROCONNECT
TYPE
REF
AMPS
VOLTS
IP
PROCONNECT

Plugs and sockets for special applications

AMR System - Automated Meter Reading

ADVANCE-GRP [AMR] Series >> Panel mounting IP66/IP67/IP69

ADVANCE-GRP[AMR] Series

403.

Without fuse carrier [AMR]

Current	Poles	Volt	Colour	h	INTERLOCKED SOCKET IP66/IP67/IP69 130x260mm		INTERLOCKED SOCKET IP66/IP67/IP69 170x380mm	
16A	2P+E	200-250V		6h	**403.AMR1683**	1		
	3P+E	380-415V			**403.AMR1686**	1		
	3P+N+E	346-415V			**403.AMR1687**	1		
32A	2P+E	200-250V			**403.AMR3283**	1		
	3P+E	380-415V			**403.AMR3286**	1		
		380V 50Hz / 440V 60Hz		3h	**403.AMR32864**	1		
	3P+N+E	346-415V		6h	**403.AMR3287**	1		
63A	2P+E	200-250V					**403.AMR6383**	1
	3P+E	380-415V					**403.AMR6386**	1
	3P+N+E	346-415V					**403.AMR6387**	1

- Supplied with stainless steel fixing screws.

AMR
AUTOMATED METER READING

ADVANCE-GRP [AMR] Series >> Panel mounting IP66/IP67/IP69

					ADVANCE-GRP[AMR] Series	
					403.	
					AMR With fuse carrier [AMR]	
					INTERLOCKED SOCKET	
					IP66/IP67/IP69	
Current	**Poles**	**Volt**	**Colour**	**h**	130x260mm	170x380mm
16A	2P+E	200-250V		6h	**403.AMR1683-F** 1	
	3P+E	380-415V			**403.AMR1686-F** 1	
	3P+N+E	346-415V			**403.AMR1687-F** 1	
32A	2P+E	200-250V			**403.AMR3283-F** 1	
	3P+E	380-415V			**403.AMR3286-F** 1	
		380V 50Hz / 440V 60Hz		3h	**403.AMR32864-F** 1	
	3P+N+E	346-415V		6h	**403.AMR3287-F** 1	
63A	2P+E	200-250V				**403.AMR6383-F** 1
	3P+E	380-415V				**403.AMR6386-F** 1
	3P+N+E	346-415V				**403.AMR6387-F** 1

- Supplied with stainless steel fixing screws.

AMR System
The products of the AMR System, from the acronym AMR (Automated Meter Reading), feature advanced technology. Thanks to the AMR system, you can acquire energy consumption data, measure currents and power, analyse grid parameters and send/receive alarm messages through text message or by e-mail.

Plugs and sockets for special applications

AMR System - Automated Meter Reading

ADVANCE-GRP [AMR] Series >> Panel mounting IP66/IP67/IP69

ADVANCE-GRP[AMR] Series

403.

With MCB [AMR]

Current	Poles	Volt	Colour	h	INTERLOCKED SOCKET IP66/IP67/IP69 130x260mm		170x380mm	
16A	2P+E	200-250V		6h	**403.AMR1683-M**	1		
	3P+E	380-415V			**403.AMR1686-M**	1		
	3P+N+E	346-415V			**403.AMR1687-M**	1		
32A	2P+E	200-250V			**403.AMR3283-M**	1		
	3P+E	380-415V			**403.AMR3286-M**	1		
		380V 50Hz / 440V 60Hz		3h	**403.AMR32864-M**	1		
	3P+N+E	346-415V		6h	**403.AMR3287-M**	1		
63A	2P+E	200-250V					**403.AMR6383-M**	1
	3P+E	380-415V					**403.AMR6386-M**	1
	3P+N+E	346-415V					**403.AMR6387-M**	1

- MCB = Miniature circuit breaker with thermal magnetic trip unit
- Supplied with stainless steel fixing screws.

AMR System
Example of container terminal applications
I/O MANAGEMENT
- Auxiliary input
- Earth presence control
- Inserted plug control
- Manoeuvre status
- Device internal temperature
- Sending of alarms

AMR
AUTOMATED METER READING

ADVANCE-GRP [AMR] Series >> Surface mounting IP66 (125A)

					ADVANCE-GRP[AMR] Series		
					503.		
					AMR With switch-disconnector [AMR]	AMR With switch-disconnector and fuse [AMR]	AMR With MCCB [AMR]
					INTERLOCKED SOCKET		
Current	**Poles**	**Volt**	**Colour**	**h**	IP66		
125A	2P+E	200-250V		6h	**503.AMR12583** 1	**503.AMR12583-F** 1	**503.AMR12583-M** [1] 1
	3P+E	380-415V			**503.AMR12586** 1	**503.AMR12586-F** 1	**503.AMR12586-M** [1] 1
	3P+N+E	346-415V			**503.AMR12587** 1	**503.AMR12587-F** 1	**503.AMR12587-M** [1] 1

[1] MCCB = Molded case circuit breaker with thermal magnetic trip unit

- Blank side with drilling point mark

Components

		SCABOX Series
		686.
Description	**Notes**	AMR **Current transformer**
CURRENT TRANSFORMER	TA 5A	**686.AMRTA-005**
	TA 32A	**686.AMRTA-032**
	TA 63A	**686.AMRTA-063**
	TA 125A	**686.AMRTA-125**
	TA 225A	**686.AMRTA-225**

Plugs and sockets for special applications

AMR System - Automated Meter Reading

Components

	SCABOX Series
	686.

Description	IP	GW	Colour	Dimension	AMR-BOX
AMR-BOX WI-FI TA5A	IP56	GW 650°C		300x220x120mm	**686.AMR209-01**

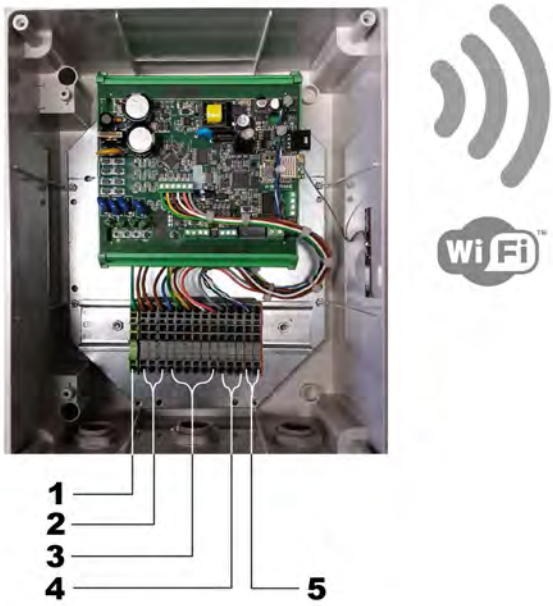

AMR-BOX System
[1] Earth connection
[2] R-S-T-N power supply
[3] Connection TA/5A
[4] Energy meeter reading
[5] Out contact NO/NC (load control)

AMR
AUTOMATED METER READING

Management

		ADVANCE-GRP[AMR] Series
		499.
Description	**Notes**	**AMR Software**
MANAGMENT SOFTWARE	BASIC PACKAGE SOFTWARE	**499.AMRSW-000** [1]
	LICENSE 001: 1 DEVICE	**499.AMRSW-001**
	LICENSE 010: 10 DEVICES	**499.AMRSW-010**
	LICENSE 030: 30 DEVICES	**499.AMRSW-030**
	LICENSE 060: 60 DEVICES	**499.AMRSW-060**
	LICENSE 100: 100 DEVICES	**499.AMRSW-100**
	LICENSE 999: FULL	**499.AMRSW-999**

[1] The software can be downloaded from SCAME website [www.scame.com]

AMR - Software
Load management and remote controls

Plugs and sockets for special applications

Plugs and sockets for industrial applications <50V~

IEC309 Series - Plugs and connectors

						IEC309 Series			
						230.		235.	
						Plugs - IP44		**Plugs - IP66/IP67**	
						PLUG			
Current	**Poles**	**Hz**	**Volt**	**Colour**	**h**	IP44		IP66/IP67	
16A	2P	50Hz 60Hz	20-25V			**230.1600**	10/100	**235.1600**	10/100
			40-50V		12h	**230.1601**	10/100	**235.1601**	10/100
		100-200Hz	20-25V 40-50V		4h	**230.16010**	10/100	**235.16010**	10/100
		300Hz			2h	**230.16012**	10/100	**235.16012**	10/100
		400Hz			3h	**230.16014**	10/100	**235.16014**	10/100
		>400-500Hz			11h	**230.16015**	10/100	**235.16015**	10/100
		DC			10h	**230.1602**	10/100	**235.1602**	10/100
	3P	50Hz 60Hz	20-25V			**230.1604**	10/100	**235.1604**	10/100
			40-50V		12h	**230.1603**	10/100	**235.1603**	10/100
		100-200Hz	20-25V 40-50V		4h	**230.16030**	10/100	**235.16030**	10/100
		300Hz			2h	**230.16032**	10/100	**235.16032**	10/100
		400Hz			3h	**230.16034**	10/100	**235.16034**	10/100
		>400-500Hz			11h	**230.16035**	10/100	**235.16035**	10/100
32A	2P	50Hz 60Hz	20-25V			**230.3200**	10/100	**235.3200**	10/100
			40-50V		12h	**230.3201**	10/100	**235.3201**	10/100
		100-200Hz	20-25V 40-50V		4h	**230.32010**	10/100	**235.32010**	10/100
		300Hz			2h	**230.32012**	10/100	**235.32012**	10/100
		400Hz			3h	**230.32014**	10/100	**235.32014**	10/100
		>400-500Hz			11h	**230.32015**	10/100	**235.32015**	10/100
		DC			10h	**230.3202**	10/100	**235.3202**	10/100
	3P	50Hz 60Hz	20-25V			**230.3204**	10/100	**235.3204**	10/100
			40-50V		12h	**230.3203**	10/100	**235.3203**	10/100
		100-200Hz	20-25V 40-50V		4h	**230.32030**	10/100	**235.32030**	10/100
		300Hz			2h	**230.32032**	10/100	**235.32032**	10/100
		400Hz			3h	**230.32034**	10/100	**235.32034**	10/100
		>400-500Hz			11h	**230.32035**	10/100	**235.32035**	10/100

IEC309 Series

330.	335.
Connectors - IP44	**Connectors - IP66/IP67**

CONNECTOR			
IP44		IP66/IP67	
330.1605	10/100	**335.1605**	10/100
330.1606	10/100	**335.1606**	10/100
330.16060	10/100	**335.16060**	10/100
330.16062	10/100	**335.16062**	10/100
330.16064	10/100	**335.16064**	10/100
330.16065	10/100	**335.16065**	10/100
330.1607	10/100	**335.1607**	10/100
330.1609	10/100	**335.1609**	10/100
330.1608	10/100	**335.1608**	10/100
330.16080	10/100	**335.16080**	10/100
330.16082	10/100	**335.16082**	10/100
330.16084	10/100	**335.16084**	10/100
330.16085	10/100	**335.16085**	10/100
330.3205	10/100	**335.3205**	10/50
330.3206	10/100	**335.3206**	10/50
330.32060	10/100	**335.32060**	10/50
330.32062	10/100	**335.32062**	10/50
330.32064	10/100	**335.32064**	10/50
330.32065	10/100	**335.32065**	10/50
330.3207	10/100	**335.3207**	10/50
330.3209	10/100	**335.3209**	10/50
330.3208	10/100	**335.3208**	10/50
330.32080	10/100	**335.32080**	10/50
330.32082	10/100	**335.32082**	10/50
330.32084	10/100	**335.32084**	10/50
330.32085	10/100	**335.32085**	10/50

Plugs and sockets for special applications

Plugs and sockets for industrial applications <50V~

IEC309 Series - Flush mounting socket outlets

Current	Poles	Hz	Volt	Colour	h	IEC309 Series 430. Flush mounting socket outlets [Angled outlet] - IP44 FLUSH-MOUNTING SOCKET IP44 70x87mm		IEC309 Series 430. Flush mounting socket outlets [Straight outlet] - IP44 FLUSH-MOUNTING SOCKET IP44 55x55mm	
16A	2P	50Hz 60Hz	20-25V			**430.1615**	10/100	**430.1615/R**	10/100
			40-50V		12h	**430.1616**	10/100	**430.1616/R**	10/100
		100-200Hz	20-25V 40-50V		4h	**430.16160**	10/100	**430.16160/R**	10/100
		300Hz			2h	**430.16162**	10/100	**430.16162/R**	10/100
		400Hz			3h	**430.16164**	10/100	**430.16164/R**	10/100
		>400-500Hz			11h	**430.16165**	10/100	**430.16165/R**	10/100
		DC			10h	**430.1617**	10/100	**430.1617/R**	10/100
	3P	50Hz 60Hz	20-25V			**430.1619**	10/100	**430.1619/R**	10/100
			40-50V		12h	**430.1618**	10/100	**430.1618/R**	10/100
		100-200Hz	20-25V 40-50V		4h	**430.16180**	10/100	**430.16180/R**	10/100
		300Hz			2h	**430.16182**	10/100	**430.16182/R**	10/100
		400Hz			3h	**430.16184**	10/100	**430.16184/R**	10/100
		>400-500Hz			11h	**430.16185**	10/100	**430.16185/R**	10/100
32A	2P	50Hz 60Hz	20-25V			**430.3215**	10/100	**430.3215/R**	10/100
			40-50V		12h	**430.3216**	10/100	**430.3216/R**	10/100
		100-200Hz	20-25V 40-50V		4h	**430.32160**	10/100	**430.32160/R**	10/100
		300Hz			2h	**430.32162**	10/100	**430.32162/R**	10/100
		400Hz			3h	**430.32164**	10/100	**430.32164/R**	10/100
		>400-500Hz			11h	**430.32165**	10/100	**430.32165/R**	10/100
		DC			10h	**430.3217**	10/100	**430.3217/R**	10/100
	3P	50Hz 60Hz	20-25V			**430.3219**	10/100	**430.3219/R**	10/100
			40-50V		12h	**430.3218**	10/100	**430.3218/R**	10/100
		100-200Hz	20-25V 40-50V		4h	**430.32180**	10/100	**430.32180/R**	10/100
		300Hz			2h	**430.32182**	10/100	**430.32182/R**	10/100
		400Hz			3h	**430.32184**	10/100	**430.32184/R**	10/100
		>400-500Hz			11h	**430.32185**	10/100	**430.32185/R**	10/100

IEC309 Series

435.

Flush mounting socket outlets [Angled outlet] - IP66/IP67

Flush mounting socket outlets [Straight outlet] - IP66/IP67

FLUSH-MOUNTING SOCKET IP66/IP67			
70x87mm		55x55mm	
435.1615	10/100	**435.1615/R**	10/100
435.1616	10/100	**435.1616/R**	10/100
435.16160	10/100	**435.16160/R**	10/100
435.16162	10/100	**435.16162/R**	10/100
435.16164	10/100	**435.16164/R**	10/100
435.16165	10/100	**435.16165/R**	10/100
435.1617	10/100	**435.1617/R**	10/100
435.1619	10/100	**435.1619/R**	10/100
435.1618	10/100	**435.1618/R**	10/100
435.16180	10/100	**435.16180/R**	10/100
435.16182	10/100	**435.16182/R**	10/100
435.16184	10/100	**435.16184/R**	10/100
435.16185	10/100	**435.16185/R**	10/100
435.3215	10/100	**435.3215/R**	10/100
435.3216	10/100	**435.3216/R**	10/100
435.32160	10/100	**435.32160/R**	10/100
435.32162	10/100	**435.32162/R**	10/100
435.32164	10/100	**435.32164/R**	10/100
435.32165	10/100	**435.32165/R**	10/100
435.3217	10/100	**435.3217/R**	10/100
435.3219	10/100	**435.3219/R**	10/100
435.3218	10/100	**435.3218/R**	10/100
435.32180	10/100	**435.32180/R**	10/100
435.32182	10/100	**435.32182/R**	10/100
435.32184	10/100	**435.32184/R**	10/100
435.32185	10/100	**435.32185/R**	10/100

Plugs and sockets for special applications

Plugs and sockets for industrial applications <50V~

IEC309 Series - Surface mounting socket outlets

						IEC309 Series			
						530.			
						Surface mounting socket outlets [Straight box] - IP44		**Surface mounting socket outlets [Angled box] - IP44**	
						SURFACE MOUNTING SOCKET			
						IP44			
Current	**Poles**	**Hz**	**Volt**	**Colour**	**h**	DRILLING POINT MARK		M20X1,5	
16A	2P	50Hz 60Hz	20-25V			**530.1610** [1][2]	10/50	**530.01610** [3][4]	10/50
			40-50V		12h	**530.1611** [1][2]	10/50	**530.01611** [3][4]	10/50
		100-200Hz	20-25V 40-50V		4h	**530.16110** [1][2]	10/50	**530.016110** [3][4]	10/50
		300Hz			2h	**530.16112** [1][2]	10/50	**530.016112** [3][4]	10/50
		400Hz			3h	**530.16114** [1][2]	10/50	**530.016114** [3][4]	10/50
		>400-500Hz			11h	**530.16115** [1][2]	10/50	**530.016115** [3][4]	10/50
		DC			10h	**530.1612** [1][2]	10/50	**530.01612** [3][4]	10/50
	3P	50Hz 60Hz	20-25V			**530.1614** [1][2]	10/50	**530.01614** [3][4]	10/50
			40-50V		12h	**530.1613** [1][2]	10/50	**530.01613** [3][4]	10/50
		100-200Hz	20-25V 40-50V		4h	**530.16130** [1][2]	10/50	**530.016130** [3][4]	10/50
		300Hz			2h	**530.16132** [1][2]	10/50	**530.016132** [3][4]	10/50
		400Hz			3h	**530.16134** [1][2]	10/50	**530.016134** [3][4]	10/50
		>400-500Hz			11h	**530.16135** [1][2]	10/50	**530.016135** [3][4]	10/50
32A	2P	50Hz 60Hz	20-25V			**530.3210** [1][2]	10/50		
			40-50V		12h	**530.3211** [1][2]	10/50		
		100-200Hz	20-25V 40-50V		4h	**530.32110** [1][2]	10/50		
		300Hz			2h	**530.32112** [1][2]	10/50		
		400Hz			3h	**530.32114** [1][2]	10/50		
		>400-500Hz			11h	**530.32115** [1][2]	10/50		
		DC			10h	**530.3212** [1][2]	10/50		
	3P	50Hz 60Hz	20-25V			**530.3214** [1][2]	10/50		
			40-50V		12h	**530.3213** [1][2]	10/50		
		100-200Hz	20-25V 40-50V		4h	**530.32130** [1][2]	10/50		
		300Hz			2h	**530.32132** [1][2]	10/50		
		400Hz			3h	**530.32134** [1][2]	10/50		
		>400-500Hz			11h	**530.32135** [1][2]	10/50		

[1] Blank side with drilling point mark
[2] Rubber cable sleeve included
[3] Open threaded cable entry
[4] Threaded cap/cable sleeve included

SCAME

1.4

IEC309 Series

530.	535.		
Surface mounting socket outlets [Angled box] - IP44	**Surface mounting socket outlets [Angled box] - IP66/IP67**		**Surface mounting socket outlets [Stright box] - IP66/IP67**
SURFACE MOUNTING SOCKET			
IP44	IP66/IP67		
M25X1,5	M20X1,5	M25X1,5	DRILLING POINT MARK
	535.01610 3 4 10/50		**535.1610** 1 2 10/50
	535.01611 3 4 10/50		**535.1611** 1 2 10/50
	535.016110 3 4 10/50		**535.16110** 1 2 10/50
	535.016112 3 4 10/50		**535.16112** 1 2 10/50
	535.016114 3 4 10/50		**535.16114** 1 2 10/50
	535.016115 3 4 10/50		**535.16115** 1 2 10/50
	535.01612 3 4 10/50		**535.1612** 1 2 10/50
	535.01614 3 4 10/50		**535.1614** 1 2 10/50
	535.01613 3 4 10/50		**535.1613** 1 2 10/50
	535.016130 3 4 10/50		**535.16130** 1 2 10/50
	535.016132 3 4 10/50		**535.16132** 1 2 10/50
	535.016134 3 4 10/50		**535.16134** 1 2 10/50
	535.016135 3 4 10/50		**535.16135** 1 2 10/50
530.03210 3 4 10/50		**535.03210** 3 4 10/50	**535.3210** 1 2 10/50
530.03211 3 4 10/50		**535.03211** 3 4 10/50	**535.3211** 1 2 10/50
530.032110 3 4 10/50		**535.032110** 3 4 10/50	**535.32110** 1 2 10/50
530.032112 3 4 10/50		**535.032112** 3 4 10/50	**535.32112** 1 2 10/50
530.032114 3 4 10/50		**535.032114** 3 4 10/50	**535.32114** 1 2 10/50
530.032115 3 4 10/50		**535.032115** 3 4 10/50	**535.32115** 1 2 10/50
530.03212 3 4 10/50		**535.03212** 3 4 10/50	**535.3212** 1 2 10/50
530.03214 3 4 10/50		**535.03214** 3 4 10/50	**535.3214** 1 2 10/50
530.03213 3 4 10/50		**535.03213** 3 4 10/50	**535.3213** 1 2 10/50
530.032130 3 4 10/50		**535.032130** 3 4 10/50	**535.32130** 1 2 10/50
530.032132 3 4 10/50		**535.032132** 3 4 10/50	**535.32132** 1 2 10/50
530.032134 3 4 10/50		**535.032134** 3 4 10/50	**535.32134** 1 2 10/50
530.032135 3 4 10/50		**535.032135** 3 4 10/50	**535.32135** 1 2 10/50

Plugs and sockets for special applications

Events and exhibitions products

OPTIMA Series - IP44/IP54 versions >> Plugs / Inlets (black version)

					OPTIMA Series	
					213.	
					Screw terminals	
					PLUG	
					IP44/IP54	
					CABLE GLAND	
Poles	**Hz**	**Volt**	**Colour**	**h**	16A	32A
2P+E	50Hz 60Hz	200-250V		6h	**213.1633.K** 10/50	**213.3233.K** 10/40
3P+E		380-415V			**213.1636.K** 10/50	**213.3236.K** 10/40
3P+N+E		208-250V		9h	**213.1635.K** 10/50	**213.3235.K** 10/40
		346-415V		6h	**213.1637.K** 10/50	**213.3237.K** 10/40

- Black-coloured

					OPTIMA Series
					213.
					Perforating terminals
					PLUG
					IP44/IP54
					CABLE GLAND
Poles	**Hz**	**Volt**	**Colour**	**h**	16A
2P+E	50Hz 60Hz	200-250V		6h	**213.1633P.K** 10/50
3P+E		380-415V			**213.1636P.K** 10/50
3P+N+E		346-415V			**213.1637P.K** 10/50

- Black-coloured

Terminals
Perforating terminals (FAST WIRING)

Terminals
Screw terminals

Terminals
Spring terminals (FAST WIRING)

OPTIMA Series - IP44/IP54 versions >> Plugs / Inlets (black version)

					OPTIMA Series	
					213.	
					Spring terminals	
					PLUG	
					IP44/IP54	
					CABLE GLAND	
Poles	**Hz**	**Volt**	**Colour**	**h**	32A	
2P+E	50Hz 60Hz	200-250V		6h	**213.3233F.K**	10/40
3P+E		380-415V			**213.3236F.K**	10/40
3P+N+E		346-415V			**213.3237F.K**	10/40

- Black-coloured

					OPTIMA Series	
					243.	
					Screw terminals [Straight outlet]	
					APPLIANCE INLET	
					IP44/IP54	
					75x75mm	
Poles	**Hz**	**Volt**	**Colour**	**h**	16A	32A
2P+E	50Hz 60Hz	200-250V		6h	**243.1693.K** 10/50	**243.3293.K** 10/50
3P+E		380-415V			**243.1696.K** 10/50	**243.3296.K** 10/50
3P+N+E		346-415V			**243.1697.K** 10/50	**243.3297.K** 10/40

- Black-coloured

Plugs and sockets for special applications

Events and exhibitions products

OPTIMA Series - IP44/IP54 versions >> Connectors (black version)

OPTIMA Series

313.

Screw terminals

Current	Poles	Hz	Volt	Colour	h	CONNECTOR IP44/IP54 CABLE GLAND	
16A	2P+E	50Hz 60Hz	200-250V		6h	**313.1643.K**	10/50
	3P+E		380-415V			**313.1646.K**	10/50
	3P+N+E		208-250V		9h	**313.1645.K**	10/50
			346-415V		6h	**313.1647.K**	10/50
32A	2P+E		200-250V			**313.3243.K**	10/40
	3P+E		380-415V			**313.3246.K**	10/40
	3P+N+E		208-250V		9h	**313.3245.K**	10/40
			346-415V		6h	**313.3247.K**	10/40

- Black-coloured

OPTIMA Series

313.

Perforating terminals

Current	Poles	Hz	Volt	Colour	h	CONNECTOR IP44/IP54 CABLE GLAND	
16A	2P+E	50Hz 60Hz	200-250V		6h	**313.1643P.K**	10/50
	3P+E		380-415V			**313.1646P.K**	10/50
	3P+N+E		346-415V			**313.1647P.K**	10/50

- Black-coloured

Terminals
Perforating terminals (FAST WIRING)

Terminals
Screw terminals

Terminals
Spring terminals (FAST WIRING)

OPTIMA Series - IP44/IP54 versions >> Connectors (black version)

						OPTIMA Series
						313.
						Spring terminals
						CONNECTOR
						IP44/IP54
Current	**Poles**	**Hz**	**Volt**	**Colour**	**h**	CABLE GLAND
32A	2P+E	50Hz 60Hz	200-250V		6h	**313.3243F.K** 10/40
	3P+E		380-415V			**313.3246F.K** 10/40
	3P+N+E		346-415V			**313.3247F.K** 10/40

- Black-coloured

						OPTIMA Series
						313.
						Screw terminals [SAFE-IN]
						CONNECTOR
						IP44/IP54
Current	**Poles**	**Hz**	**Volt**	**Colour**	**h**	CABLE GLAND
16A	2P+E	50Hz 60Hz	200-250V		6h	**313.1643H.K** 10/50
	3P+E		380-415V			**313.1646H.K** 10/50
	3P+N+E		346-415V			**313.1647H.K** 10/50

Sockets with "SAFE-IN" safety device

- Black-coloured

Plugs and sockets for special applications

Events and exhibitions products

OPTIMA Series - IP44/IP54 versions >> Flush mounting socket outlets (black version)

						OPTIMA Series			
						413.			
						Screw terminals [Angled outlet]			
						FLUSH-MOUNTING SOCKET IP44/IP54			
Current	**Poles**	**Hz**	**Volt**	**Colour**	**h**	70x87mm		84x106mm	
16A	2P+E	50Hz 60Hz	200-250V		6h	**413.1663.K**	10/100		
	3P+E		380-415V			**413.1666.K**	10/100		
	3P+N+E		346-415V			**413.1667.K**	10/100		
32A	2P+E		200-250V					**413.3263.K**	10/50
	3P+E		380-415V					**413.3266.K**	10/50
	3P+N+E		346-415V					**413.3267.K**	10/50

- Black-coloured

APPLICATION EXAMPLE

Terminals
Screw terminals

OPTIMA Series - IP44/IP54 versions >> Flush mounting socket outlets (black version)

						OPTIMA Series	
						413.	
						Screw terminals [Angled outlet] [SAFE-IN]	
						FLUSH-MOUNTING SOCKET	
						IP44/IP54	
Current	**Poles**	**Hz**	**Volt**	**Colour**	**h**	70x87mm	
16A	2P+E	50Hz 60Hz	200-250V		6h	**413.1663H.K**	10/100
	3P+E		380-415V			**413.1666H.K**	10/100
	3P+N+E		346-415V			**413.1667H.K**	10/100

Sockets with "SAFE-IN" safety device

- Black-coloured

THE "SAFE-IN" SAFETY DEVICE

The "SAFE-IN" safety device assembled on the 16A industrial sockets works like the protection installed on household sockets, i.e., by means of an appropriate shutter, it closes the input of the socket contact tubes and prevents accidental and voluntary contact of live parts of the socket with slim objects, such as screwdrivers or wires. This protection offers an additional safety guarantee, in addition to that already provided by the spring-loaded cover assembled on the mobile sockets.

Plugs and sockets for special applications

Events and exhibitions products

OPTIMA Series - IP44/IP54 versions >> Flush mounting socket outlets (black version)

OPTIMA Series

413.

Spring terminals [Angled outlet]

Current	Poles	Hz	Volt	Colour	h	FLUSH-MOUNTING SOCKET IP44/IP54 70x87mm	FLUSH-MOUNTING SOCKET IP44/IP54 84x106mm
16A	2P+E	50Hz 60Hz	200-250V		6h	**413.1663F.K** 10/100	
	3P+E		380-415V			**413.1666F.K** 10/100	
	3P+N+E		346-415V			**413.1667F.K** 10/100	
32A	2P+E		200-250V				**413.3263F.K** 10/50
	3P+E		380-415V				**413.3266F.K** 10/50
	3P+N+E		346-415V				**413.3267F.K** 10/50

- Black-coloured

EUREKA Series

422.

Screw terminals [Straight outlet]

Current	Poles	Hz	Volt	Colour	h	FLUSH-MOUNTING SOCKET IP44 62x62mm
16A	2P+E	50Hz 60Hz	200-250V		6h	**422.1663/R.K** 10/100

- Black-coloured

Terminals
Spring terminals (FAST WIRING)

Terminals
Screw terminals

OPTIMA Series - IP44/IP54 versions >> Flush mounting socket outlets (black version)

						EUREKA Series	
						422.	
						Screw terminals [Straight outlet]	
						FLUSH-MOUNTING SOCKET	
						IP44	
Current	**Poles**	**Hz**	**Volt**	**Colour**	**h**	75x75mm	
16A	2P+E	50Hz 60Hz	200-250V		6h	**422.1663.K**	10/100
32A	3P+N+E		346-415V			**422.3267.K**	10/50

- Black-coloured

OPTIMA Series - IP66/IP67/IP69 versions >> Plugs / inlets (black version)

					OPTIMA Series	
					218.	
					Screw terminals	
					PLUG	
					IP66/IP67/IP69	
					CABLE GLAND	
Poles	**Hz**	**Volt**	**Colour**	**h**	16A	32A
2P+E	50Hz 60Hz	200-250V		6h	**218.1633.K** 10/40	**218.3233.K** 10/40
3P+E		380-415V			**218.1636.K** 10/40	**218.3236.K** 10/40
3P+N+E		346-415V			**218.1637.K** 10/40	**218.3237.K** 10/40

- Black-coloured

Plugs and sockets for special applications

Events and exhibitions products

OPTIMA Series - IP66/IP67/IP69 versions >> Plugs / inlets (black version)

Poles	Hz	Volt	Colour	h	OPTIMA Series 218. PLUG IP66/IP67/IP69 CABLE GLAND 16A
					Perforating terminals
2P+E	50Hz 60Hz	200-250V		6h	**218.1633P.K** 10/40
3P+E		380-415V			**218.1636P.K** 10/40
3P+N+E		346-415V			**218.1637P.K** 10/40

- Black-coloured

Poles	Hz	Volt	Colour	h	OPTIMA Series 218. PLUG IP66/IP67/IP69 CABLE GLAND 32A
					Spring terminals
2P+E	50Hz 60Hz	200-250V		6h	**218.3233F.K** 10/40
3P+E		380-415V			**218.3236F.K** 10/40
3P+N+E		346-415V			**218.3237F.K** 10/40

- Black-coloured

Terminals
Spring terminals (FAST WIRING)

Terminals
Perforating terminals (FAST WIRING)

Terminals
Mantle terminals (EASY-PLUG)

Terminals
Screw terminals

OPTIMA Series - IP66/IP67/IP69 versions >> Plugs / inlets (black version)

Mantle terminals

Current	Poles	Hz	Volt	Colour	h	OPTIMA Series 218. PLUG IP66/IP67/IP69 CABLE GLAND	
63A	2P+E	50Hz 60Hz	200-250V		6h	**218.6333.K**	6/24
	3P+E		380-415V			**218.6336.K**	6/24
	3P+N+E		346-415V			**218.6337.K**	6/24
125A	2P+E		200-250V			**218.12533.K**	1/8
	3P+E		380-415V			**218.12536.K**	1/8
	3P+N+E		346-415V			**218.12537.K**	1/8

- Black-coloured

Screw terminals

Poles	Hz	Volt	Colour	h	OPTIMA Series 248. APPLIANCE INLET IP66/IP67/IP69 75x75mm 16A		32A	
2P+E	50Hz 60Hz	200-250V		6h	**248.1693.K**	10/50	**248.3293.K**	10/50
3P+E		380-415V			**248.1696.K**	10/50	**248.3296.K**	10/50
3P+N+E		346-415V			**248.1697.K**	10/50	**248.3297.K**	10/40

- Black-coloured

Plugs and sockets for special applications

Events and exhibitions products

OPTIMA Series - IP66/IP67/IP69 versions >> Plugs / inlets (black version)

OPTIMA Series

248.

Mantle terminals [Straight outlet]

Current	Poles	Hz	Volt	Colour	h	APPLIANCE INLET IP66/IP67/IP69 100x110mm	APPLIANCE INLET IP66/IP67/IP69 114x114mm
63A	3P+N+E	50Hz 60Hz	346-415V		6h	**248.6397.K** 10	
125A							**248.12597.K** 10

- Black-coloured

OPTIMA Series - IP66/IP67/IP69 versions >> Connectors (black version)

OPTIMA Series

318.

Screw terminals

Current	Poles	Hz	Volt	Colour	h	CONNECTOR IP66/IP67/IP69 CABLE GLAND
16A	2P+E	50Hz 60Hz	200-250V		6h	**318.1643.K** 10/40
	3P+E		380-415V			**318.1646.K** 10/40
	3P+N+E		346-415V			**318.1647.K** 10/40
32A	2P+E		200-250V			**318.3243.K** 10/40
	3P+E		380-415V			**318.3246.K** 10/40
	3P+N+E		346-415V			**318.3247.K** 10/40

- Black-coloured

Terminals
Mantle terminals (EASY-PLUG)

Terminals
Screw terminals

Terminals
Spring terminals (FAST WIRING)

Terminals
Perforating terminals (FAST WIRING)

OPTIMA Series - IP66/IP67/IP69 versions >> Connectors (black version)

Perforating terminals

Current	Poles	Hz	Volt	Colour	h	OPTIMA Series 318. CONNECTOR IP66/IP67/IP69 CABLE GLAND	
16A	2P+E	50Hz 60Hz	200-250V		6h	**318.1643P.K**	10/40
	3P+E		380-415V			**318.1646P.K**	10/40
	3P+N+E		346-415V			**318.1647P.K**	10/40

- Black-coloured

Spring terminals

Current	Poles	Hz	Volt	Colour	h	OPTIMA Series 318. CONNECTOR IP66/IP67/IP69 CABLE GLAND	
32A	2P+E	50Hz 60Hz	200-250V		6h	**318.3243F.K**	10/40
	3P+E		380-415V			**318.3246F.K**	10/40
	3P+N+E		346-415V			**318.3247F.K**	10/40

- Black-coloured

Plugs and sockets for special applications

Events and exhibitions products

OPTIMA Series - IP66/IP67/IP69 versions >> Connectors (black version)

OPTIMA Series

318.

Mantle terminals

Current	Poles	Hz	Volt	Colour	h	CONNECTOR IP66/IP67/IP69 CABLE GLAND	
63A	2P+E	50Hz 60Hz	200-250V		6h	**318.6343.K**	6/24
	3P+E		380-415V			**318.6346.K**	6/24
	3P+N+E		346-415V			**318.6347.K**	6/24
125A	2P+E		200-250V			**318.12543.K**	1/8
	3P+E		380-415V			**318.12546.K**	1/8
	3P+N+E		346-415V			**318.12547.K**	1/8

- Black-coloured

OPTIMA Series

318.

Screw terminals [SAFE-IN]

Current	Poles	Hz	Volt	Colour	h	CONNECTOR IP66/IP67/IP69 CABLE GLAND	
16A	2P+E	50Hz 60Hz	200-250V		6h	**318.1643H.K**	10/40
	3P+E		380-415V			**318.1646H.K**	10/40
	3P+N+E		346-415V			**318.1647H.K**	10/40

Sockets with "SAFE-IN" safety device

- Black-coloured

Terminals
Mantle terminals (EASY-PLUG)

Terminals
Screw terminals

OPTIMA Series - IP66/IP67/IP69 versions >> Flush mounting socket outlets (black version)

Screw terminals [Angled outlet]

Current	Poles	Hz	Volt	Colour	h	OPTIMA Series 418. FLUSH-MOUNTING SOCKET IP66/IP67/IP69 70x87mm		84x106mm	
16A	2P+E	50Hz 60Hz	200-250V		6h	**418.1663.K**	10/100		
	3P+E		380-415V			**418.1666.K**	10/100		
	3P+N+E		346-415V			**418.1667.K**	10/100		
32A	2P+E		200-250V					**418.3263.K**	10/50
	3P+E		380-415V					**418.3266.K**	10/50
	3P+N+E		346-415V					**418.3267.K**	10/50

- Black-coloured

Mantle terminals [Angled outlet]

Current	Poles	Hz	Volt	Colour	h	OPTIMA Series 418. FLUSH-MOUNTING SOCKET IP66/IP67/IP69 100x110mm	
63A	3P+N+E	50Hz 60Hz	346-415V		6h	**418.6367.K**	6/30

- Black-coloured

Plugs and sockets for special applications

Events and exhibitions products

OPTIMA Series - IP66/IP67/IP69 versions >> Flush mounting socket outlets (black version)

						OPTIMA Series	
						418.	
						Screw terminals [Angled outlet] [SAFE-IN]	
						FLUSH-MOUNTING SOCKET	
						IP66/IP67/IP69	
Current	**Poles**	**Hz**	**Volt**	**Colour**	**h**	70x87mm	
16A	2P+E	50Hz 60Hz	200-250V		6h	**418.1663H.K**	10/100
	3P+E		380-415V			**418.1666H.K**	10/100
	3P+N+E		346-415V			**418.1667H.K**	10/100

Sockets with "SAFE-IN" safety device

- Black-coloured

						OPTIMA Series	
						418.	
						Spring terminals [Angled outlet]	
						FLUSH-MOUNTING SOCKET	
						IP66/IP67/IP69	
Current	**Poles**	**Hz**	**Volt**	**Colour**	**h**	70x87mm	84x106mm
16A	2P+E	50Hz 60Hz	200-250V		6h	**418.1663F.K** 10/100	
	3P+E		380-415V			**418.1666F.K** 10/100	
	3P+N+E		346-415V			**418.1667F.K** 10/100	
32A	2P+E		200-250V				**418.3263F.K** 10/50
	3P+E		380-415V				**418.3266F.K** 10/50
	3P+N+E		346-415V				**418.3267F.K** 10/50

- Black-coloured

Terminals
Spring terminals (FAST WIRING)

Terminals
Screw terminals

ITALIAN STANDARD P30 2P+E 16A
Shuttered socket CEI 23-50

ITALIAN STANDARD P17/11 2P+E 16A
Shuttered socket CEI 23-50

2P+E 16A

ADAPTO Series - One-way adaptors

				Sockets 16A 2P+E			ADAPTO Series 610.	
							With IEC 309 industrial plug	
							ONE-WAY ADAPTOR	
Supply	**Current**	**Poles**	**Volt**			**Notes**	IP20	
Appliance inlet IEC309 16A	16A	2P+E	250V	1	2	2 BIV.+1 P30		**610.388.N** 10/100
					1	ITALIAN P17/11 BIV.	**610.380.N** 10/100	

- For temporary use only
- Black-coloured

				Sockets 16A 2P+E		ADAPTO Series 610.
						With domestic plug
						ONE-WAY ADAPTOR
Supply	**Current**	**Poles**	**Volt**		**Notes**	IP20
Appliance inlet 16A IT Std	16A	2P+E	250V	1	ITALIAN S17	**610.384.N** 10/100

- For temporary use only
- Black-coloured

Plugs and sockets for special applications

Industrial plugs and sockets for military use

EUREKA-MIL Series

Plugs

Current	Poles	Hz	Volt	Colour	h	EUREKA - MIL Series 215. PLUG IP67 CABLE GLAND		EUREKA - MIL Series 216. PLUG IP67 CABLE GLAND	
16A	2P+E	50/60Hz	200-250V		6h			**216.81633**	1/5
	3P+E		380-415V					**216.81636**	1/5
	3P+N+E		346-415V					**216.81637**	1/5
32A	2P+E		200-250V					**216.83233**	1/5
	3P+E		380-415V					**216.83236**	
	3P+N+E		346-415V					**216.83237**	1/5
63A	2P+E		200-250V			**215.86333**			
	3P+E		380-415V			**215.86336**	1		
	3P+N+E		346-415V			**215.86337**	1		
125A	2P+E		200-250V			**215.812533**			
	3P+E		380-415V			**215.812536**			
	3P+N+E		346-415V			**215.812537**			

- Green-coloured

Terminals
Screw terminals

EUREKA-MIL Series

EUREKA - MIL Series

247.

Appliance inlets [Straight outlet]

Current	Poles	Hz	Volt	Colour	h	APPLIANCE INLET IP67 120x120mm		APPLIANCE INLET IP67 145x145mm
16A	2P+E	50/60Hz	200-250V		6h	**247.81693**	1/5	
	3P+E		380-415V			**247.81696**		
	3P+N+E		346-415V			**247.81697**	1/5	
32A	2P+E		200-250V			**247.83293**	1/5	
	3P+E		380-415V			**247.83296**		
	3P+N+E		346-415V			**247.83297**	1/5	
63A	2P+E		200-250V			**247.86393**		
	3P+E		380-415V			**247.86396**		
	3P+N+E		346-415V			**247.86397**	1	
125A	2P+E		200-250V					**247.812593**
	3P+E		380-415V					**247.812596**
	3P+N+E		346-415V					**247.812597**

- Green-coloured

APPLICATION EXAMPLE

Plugs and sockets for special applications

Industrial plugs and sockets for military use

EUREKA-MIL Series

Straight connectors

Current	Poles	Hz	Volt	Colour	h	EUREKA - MIL Series			
						315.		316.	
						CONNECTOR IP67 CABLE GLAND			
16A	2P+E	50/60Hz	200-250V		6h			**316.81643**	1/5
	3P+E		380-415V					**316.81646**	
	3P+N+E		346-415V					**316.81647**	1/5
32A	2P+E		200-250V					**316.83243**	1/5
	3P+E		380-415V					**316.83246**	
	3P+N+E		346-415V					**316.83247**	1/5
63A	2P+E		200-250V			**315.86343**	1		
	3P+E		380-415V			**315.86346**			
	3P+N+E		346-415V			**315.86347**	1		
125A	2P+E		200-250V			**315.812543**			
	3P+E		380-415V			**315.812546**	1		
	3P+N+E		346-415V			**315.812547**			

- Green-coloured

Terminals
Screw terminals

EUREKA-MIL Series

						EUREKA - MIL Series				
						427.				
						Panel mounting sockets outlets [Straight outlet]				
						FLUSH-MOUNTING SOCKET				
						IP67				
Current	**Poles**	**Hz**	**Volt**	**Colour**	**h**	100x100mm		120x120mm	145x145mm	
16A	2P+E	50/60Hz	200-250V		6h	**427.81663**	1/5			
	3P+E		380-415V			**427.81666**				
	3P+N+E		346-415V			**427.81667**	1/5			
32A	2P+E		200-250V			**427.83263**	1/5			
	3P+E		380-415V			**427.83266**				
	3P+N+E		346-415V			**427.83267**	1/5			
63A	2P+E		200-250V					**427.86363**		
	3P+E		380-415V					**427.86366**		
	3P+N+E		346-415V					**427.86367**	1	
125A	2P+E		200-250V						**427.812563**	
	3P+E		380-415V						**427.812566**	
	3P+N+E		346-415V						**427.812567**	

- Green-coloured

Plugs and sockets for special applications

Industrial plugs and sockets for military use

EUREKA-MIL Series

			ACCESSORIES
			570.

Description	Current	Poles	Cover for IP67 plugs	
PLUG CAP	16A 20A	2P+E	**570.80163**	10/100
		3P+E	**570.80164**	10/100
		3P+N+E	**570.80165**	10/100
	30A 32A		**570.80325**	10/100
		2/3P+E	**570.80324**	10/100
	60A 63A	ALL	**570.8063**	10
	100A 125A		**570.8125**	10

- Green-coloured

SNAP-ON DEVICE
Snap-action opening and closing
A patented "SNAP-ON"device provides snap-action opening and closing of EUREKA Series plugs and sockets. The "SNAP-ON" device significantly cuts down on wiring time: it opens by pressing down on the spring with a tool and closes simply by twisting the grip or the insert.

2P+E 16A

3P+E 16A

3P+N+E 16A

EUREKA-MIL Series

			ADAPTO Series			
			603.			
			Sockets			**Adaptors**
			16A			MULTI -WAY ADAPTOR
			2P+E	3P+E	3P+N+E	IP66
Current	**Poles**	**Volt**				Terminal block 16mm²
16A	2P+E	230V	3			**603.83505-062** 1/10
	3P+E	400V		3		**603.83505-063**
	3P+N+E		2	1		**603.83505-059**
			2		1	**603.83505-061** 1/10
					3	**603.83505-064**

- Zinc-plated steel carrying handle.
- Equipped with PG21 cable gland, cable clamp and terminal block.
- Green-coloured

Plugs and sockets for special applications

Plugs and sockets UL/CSA

Series I [International] - IP44 splashproof

						EUREKA[PIN&SLEEVE] Series			
						SCM.			
						Plugs IP44		Appliance inlets IP44 [Straight outlet]	
						PLUG		APPLIANCE INLET	
						IP44			
								120x120mm	
Current	**Poles**	**Hz**	**Volt**	**Colour**	**h**	CABLE SLEEVE			
16A	2P 3W	50/60Hz	100-130V		4h	**SCM316P4S**	1/5	**SCM316B4S**	1/5
			200-250V		6h	**SCM316P6S**	1/5	**SCM316B6S**	1/5
	3P 4W		380-415V			**SCM416P6S**	1/5	**SCM416B6S**	1/5
	4P 5W		346-415V			**SCM516P6S**	1/5		
32A	2P 3W		100-130V		4h	**SCM332P4S**	1/5		
			200-250V		6h	**SCM332P6S**	1/5	**SCM332B6S**	1/5
	3P 4W		380-415V			**SCM432P6S**	1/5	**SCM432B6S**	1/5
			380V 50Hz / 440V 60Hz		3h				
	4P 5W	50/60Hz	346-415V		6h	**SCM532P6S**	1/5	**SCM532B6S**	1/5

- UL classified

INTERNATIONAL RATINGS
Products certified by UL laboratories according to standards IEC60309-1 and IEC60309-2

Terminals
Screw terminals

EUREKA[PIN&SLEEVE] Series

SCM.

Straight connectors IP44

Panel mounting sockets outlets IP44 [Straight outlet]

CONNECTOR		RECEPTACLE	
IP44			
		100x100mm	
CABLE SLEEVE			
SCM316C4S	1/5	**SCM316R4S**	1/5
SCM316C6S	1/5	**SCM316R6S**	1/5
SCM416C6S	1/5	**SCM416R6S**	1/5
SCM516C6S	1/5	**SCM516R6S**	1/5
SCM332C4S	1/5	**SCM332R4S**	1/5
SCM332C6S	1/5	**SCM332R6S**	1/5
SCM432C6S	1/5	**SCM432R6S**	1/5
		SCM432R3S	1/5
SCM532C6S	1/5	**SCM532R6S**	1/5

Plugs and sockets for special applications

Plugs and sockets UL/CSA

Series I [International] - IP67 watertight

EUREKA[PIN&SLEEVE] Series

SCM.

Plugs IP67

Appliance inlets IP67 [Straight outlet]

						PLUG		APPLIANCE INLET	
						IP67			
								120x120mm	
Current	**Poles**	**Hz**	**Volt**	**Colour**	**h**	CABLE GLAND			
16A	2P 3W	50/60Hz	100-130V		4h	**SCM316P4W**	1/5	**SCM316B4W**	1/5
			200-250V		6h	**SCM316P6W**	1/5	**SCM316B6W**	1/5
	3P 4W		380-415V			**SCM416P6W**	1/5	**SCM416B6W**	1/5
	4P 5W		346-415V			**SCM516P6W**	1/5	**SCM516B6W**	1/5
32A	2P 3W		100-130V		4h	**SCM332P4W**	1/5	**SCM332B4W**	1/5
			200-250V		6h	**SCM332P6W**	1/5	**SCM332B6W**	1/5
	3P 4W		380-415V			**SCM432P6W**	1/5	**SCM432B6W**	1/5
			380V 50Hz / 440V 60Hz		3h	**SCM432P3W**	1/5		
			600-690V		5h	**SCM432P5W**	1/5		
			380V 50Hz / 440V 60Hz		3h				
	4P 5W		346-415V		6h	**SCM532P6W**	1/5	**SCM532B6W**	1/5
63A	2P 3W	50/60Hz	200-250V			**SCM363P6W**	1	**SCM363B6W**	1
	3P 4W		380-415V			**SCM463P6W**	1	**SCM463B6W**	1
			600-690V		5h	**SCM463P5W**			
	4P 5W		346-415V		6h	**SCM563P6W**	1	**SCM563B6W**	1
125A	2P 3W		200-250V			**SCM3125P6W**	1		
	3P 4W		380-415V			**SCM4125P6W**	1		
	4P 5W		346-415V			**SCM5125P6W**	1		

- UL classified

INTERNATIONAL RATINGS
Products certified by UL laboratories according to standards IEC60309-1 and IEC60309-2

Terminals
Screw terminals

EUREKA[PIN&SLEEVE] Series

SCM.

Appliance inlets IP67 [Straight outlet]

Straight connectors IP67

Panel mounting sockets outlets IP67 [Straight outlet]

APPLIANCE INLET		CONNECTOR		RECEPTACLE					
				IP67					
145x145mm				100x100mm		120x120mm		145x145mm	
		CABLE GLAND							
		SCM316C4W	1/5	**SCM316R4W**	1/5				
		SCM316C6W	1/5	**SCM316R6W**	1/5				
		SCM416C6W	1/5	**SCM416R6W**	1/5				
		SCM516C6W	1/5	**SCM516R6W**	1/5				
		SCM332C4W	1/5	**SCM332R4W**	1/5				
		SCM332C6W	1/5	**SCM332R6W**	1/5				
		SCM432C6W	1/5	**SCM432R6W**	1/5				
		SCM432C3W	1/5						
				SCM432R5W					
				SCM432R3W	1/5				
		SCM532C6W	1/5	**SCM532R6W**	1/5				
		SCM363C6W	1			**SCM363R6W**	1		
		SCM463C6W	1			**SCM463R6W**	1		
						SCM463R5W			
		SCM563C6W	1			**SCM563R6W**	1		
SCM3125B6W	1	**SCM3125C6W**	1					**SCM3125R6W**	1
SCM4125B6W	1	**SCM4125C6W**	1					**SCM4125R6W**	1
SCM5125B6W	1	**SCM5125C6W**	1					**SCM5125R6W**	1

Plugs and sockets for special applications

Plugs and sockets UL/CSA

Series II [North America] - IP44 splashproof [20A-30A]

EUREKA[PIN&SLEEVE] Series

SCM.

Straight plugs IP44

Appliance inlets IP44 [Straight outlet]

				PLUG				APPLIANCE INLET			
				IP44							
								120x120mm			
				CABLE SLEEVE							
Poles	**Volt**	**Colour**	**h**	20A		30A		20A		30A	
2P 3W	125V		4h	**SCM320P4S**	1/5	**SCM330P4S**	1/5	**SCM320B4S**	1/5	**SCM330B4S**	1/5
	250V		6h	**SCM320P6S** [1] [2]	1/5	**SCM330P6S** [1] [2]	1/5	**SCM320B6S** [1]	1/5	**SCM330B6S** [1]	1/5
	277V		5h	**SCM320P5S**	1/5			**SCM320B5S**	1/5		
	480V		7h	**SCM320P7S**	1/5	**SCM330P7S**	1/5	**SCM320B7S**	1/5	**SCM330B7S**	
	550VDC		8h			**SCM330P8S**	1/5			**SCM330B8S**	1/5
3P 4W	125/250V		12h	**SCM420P12S**	1/5	**SCM430P12S**	1/5	**SCM420B12S**	1/5	**SCM430B12S**	1/5
	3Ø250V		9h	**SCM420P9S** [1]	1/5	**SCM430P9S** [1]	1/5	**SCM420B9S**	1/5	**SCM430B9S**	1/5
	380-415V		6h	**SCM420P6S** [1] [2]	1/5	**SCM430P6S** [1] [2]	1/5	**SCM420B6S** [1]	1/5	**SCM430B6S** [1]	1/5
	3Ø480V		7h	**SCM420P7S**	1/5	**SCM430P7S**	1/5	**SCM420B7S**	1/5	**SCM430B7S**	
	3Ø600V		5h	**SCM420P5S**	1/5	**SCM430P5S**	1/5	**SCM420B5S**		**SCM430B5S**	1/5
4P 5W	3ØY120/208V		9h	**SCM520P9S** [1]	1/5	**SCM530P9S** [1]	1/5	**SCM520B9S**	1/5	**SCM530B9S**	
	200/346V 240/415V		6h	**SCM520P6S** [1] [2]	1/5	**SCM530P6S** [1] [2]	1/5	**SCM520B6S** [1]	1/5	**SCM530B6S** [1]	1/5
	3ØY347/600V		5h	**SCM520P5S**	1/5	**SCM530P5S**	1/5	**SCM520B5S**		**SCM530B5S**	1/5
	480V		7h	**SCM520P7S**	1/5	**SCM530P7S**	1/5	**SCM520B7S**		**SCM530B7S**	1/5

[1] Dual ratings - Products with dual classification: Series I (International) and Series II (North America)

[2] Products with dual certifications: UL listed (North America) and ENEC (International)

\- UL listed

c UL us LISTED
NORTH AMERICAN RATINGS
Products certified by UL laboratories according to standards UL1682 and UL1686

ENEC certified
Products with dual certifications: UL listed (North America) and ENEC (International)

Terminals
Screw terminals

EUREKA[PIN&SLEEVE] Series

SCM.

Straight connectors IP44

Panel mounting sockets outlets IP44 [Straight outlet]

CONNECTOR				RECEPTACLE			
IP44							
				100x100mm			
CABLE SLEEVE							
20A		30A		20A		30A	
SCM320C4S	1/5	**SCM330C4S**	1/5	**SCM320R4S**	1/5	**SCM330R4S**	1/5
SCM320C6S [1][2]	1/5	**SCM330C6S** [1][2]	1/5	**SCM320R6S** [1]	1/5	**SCM330R6S** [1]	1/5
SCM320C5S	1/5			**SCM320R5S**	1/5		
SCM320C7S		**SCM330C7S**	1/5	**SCM320R7S**		**SCM330R7S**	
		SCM330C8S	1			**SCM330R8S**	1/5
SCM420C12S	1/5	**SCM430C12S**	1/5	**SCM420R12S**	1/5	**SCM430R12S**	1/5
SCM420C9S [1]	1/5	**SCM430C9S** [1]	1/5	**SCM420R9S**	1/5	**SCM430R9S**	1/5
SCM420C6S [1][2]	1/5	**SCM430C6S** [1][2]	1/5	**SCM420R6S** [1]	1/5	**SCM430R6S** [1]	1/5
SCM420C7S	1/5	**SCM430C7S**		**SCM420R7S**	1/5	**SCM430R7S**	1/5
SCM420C5S	1/5	**SCM430C5S**	1/5	**SCM420R5S**	1/5	**SCM430R5S**	1/5
SCM520C9S [1]	1	**SCM530C9S** [1]	1/5	**SCM520R9S**	1/5	**SCM530R9S**	1/5
SCM520C6S [1][2]	1/5	**SCM530C6S** [1][2]	1/5	**SCM520R6S** [1]	1/5	**SCM530R6S** [1]	1/5
SCM520C5S	1/5	**SCM530C5S**		**SCM520R5S**	1/5	**SCM530R5S**	
SCM520C7S	1/5	**SCM530C7S**	1/5	**SCM520R7S**	1/5	**SCM530R7S**	1/5

Plugs and sockets for special applications

Plugs and sockets UL/CSA

Series II [North America] - IP67 watertight [20A-30A]

EUREKA[PIN&SLEEVE] Series

SCM.

Straight plugs IP67

Appliance inlets IP67 [Straight outlet]

				PLUG		APPLIANCE INLET	
				IP67			
						120x120mm	
				CABLE GLAND			
Poles	**Volt**	**Colour**	**h**	20A	30A	20A	30A
2P 3W	125V		4h	**SCM320P4W** 1/5	**SCM330P4W** 1/5	**SCM320B4W** 1/5	**SCM330B4W** 1/5
	250V		6h	**SCM320P6W** [1] [2] 1/5	**SCM330P6W** [1] [2] 1/5	**SCM320B6W** [1] 1/5	**SCM330B6W** [1] 1/5
	277V		5h	**SCM320P5W** 1/5		**SCM320B5W** 1/5	
	480V		7h	**SCM320P7W** 1/5	**SCM330P7W** 1/5	**SCM320B7W** 1/5	**SCM330B7W** 1/5
	550VDC		8h		**SCM330P8W** 1/5		**SCM330B8W** 1/5
3P 4W	125/250V		12h	**SCM420P12W** 1/5	**SCM430P12W** 1/5	**SCM420B12W** 1/5	**SCM430B12W** 1/5
	3Ø250V		9h	**SCM420P9W** [1] 1/5	**SCM430P9W** [1] 1/5	**SCM420B9W** 1/5	**SCM430B9W** 1/5
	380-415V		6h	**SCM420P6W** [1] [2] 1/5	**SCM430P6W** [1] [2] 1/5	**SCM420B6W** [1] 1/5	**SCM430B6W** [1] 1/5
	3Ø480V		7h	**SCM420P7W** 1/5	**SCM430P7W** 1/5	**SCM420B7W** 1/5	**SCM430B7W** 1/5
	3Ø600V		5h	**SCM420P5W** 1/5	**SCM430P5W** 1/5	**SCM420B5W** 1/5	**SCM430B5W** 1/5
4P 5W	3ØY120/208V		9h	**SCM520P9W** [1] 1/5	**SCM530P9W** [1] 1/5	**SCM520B9W** 1/5	**SCM530B9W** 1/5
	200/346V 240/415V		6h	**SCM520P6W** [1] [2] 1/5	**SCM530P6W** [1] [2] 1/5	**SCM520B6W** [1] 1/5	**SCM530B6W** [1] 1/5
	3ØY347/600V		5h	**SCM520P5W** 1/5	**SCM530P5W** 1/5	**SCM520B5W**	**SCM530B5W**
	480V		7h	**SCM520P7W** 1/5	**SCM530P7W** 1/5	**SCM520B7W** 1/5	**SCM530B7W** 1/5

[1] Dual ratings - Products with dual classification: Series I (International) and Series II (North America)

[2] Products with dual certifications: UL listed (North America) and ENEC (International)

\- UL listed

NORTH AMERICAN RATINGS
Products certified by UL laboratories according to standards UL1682 and UL1686

ENEC certified
Products with dual certifications: UL listed (North America) and ENEC (International)

Terminals
Screw terminals

EUREKA[PIN&SLEEVE] Series

SCM.

Straight connectors IP67

Panel mounting sockets outlets IP67 [Straight outlet]

CONNECTOR				RECEPTACLE			
IP67							
				100x100mm			
CABLE GLAND							
20A		30A		20A		30A	
SCM320C4W	1/5	**SCM330C4W**	1/5	**SCM320R4W**	1/5	**SCM330R4W**	1/5
SCM320C6W [1][2]	1/5	**SCM330C6W** [1][2]	1/5	**SCM320R6W** [1]	1/5	**SCM330R6W** [1]	1/5
SCM320C5W	1/5			**SCM320R5W**	1/5		
SCM320C7W	1/5	**SCM330C7W**	1/5	**SCM320R7W**	1/5	**SCM330R7W**	1/5
		SCM330C8W	1			**SCM330R8W**	1/5
SCM420C12W	1/5	**SCM430C12W**	1/5	**SCM420R12W**	1/5	**SCM430R12W**	1/5
SCM420C9W [1]	1/5	**SCM430C9W** [1]	1/5	**SCM420R9W**	1/5	**SCM430R9W**	1/5
SCM420C6W [1][2]	1/5	**SCM430C6W** [1][2]	1/5	**SCM420R6W** [1]	1/5	**SCM430R6W** [1]	1/5
SCM420C7W	1/5	**SCM430C7W**	1/5	**SCM420R7W**	1/5	**SCM430R7W**	1/5
SCM420C5W	1/5	**SCM430C5W**	1/5	**SCM420R5W**	1/5	**SCM430R5W**	1/5
SCM520C9W [1]	1/5	**SCM530C9W** [1]	1/5	**SCM520R9W**	1/5	**SCM530R9W**	1/5
SCM520C6W [1][2]	1/5	**SCM530C6W** [1][2]	1/5	**SCM520R6W** [1]	1/5	**SCM530R6W** [1]	1/5
SCM520C5W	1/5	**SCM530C5W**	1/5	**SCM520R5W**	1/5	**SCM530R5W**	1/5
SCM520C7W	1/5	**SCM530C7W**	1/5	**SCM520R7W**	1/5	**SCM530R7W**	1/5

Plugs and sockets for special applications

Plugs and sockets UL/CSA

Series II [North America] - IP67 watertight [60A-100A]

EUREKA[PIN&SLEEVE] Series

SCM.

Straight plugs IP67

Appliance inlets IP67 [Straight outlet]

				PLUG		APPLIANCE INLET	
				IP67			
						120x120mm	145x145mm
				CABLE GLAND			
Poles	**Volt**	**Colour**	**h**	60A	100A	60A	100A
2P 3W	>50-250V		3h	**SCM360P3W** 1		**SCM360B3W** 1	
	125V		4h	**SCM360P4W** 1	**SCM3100P4W**	**SCM360B4W** 1	**SCM3100B4W**
	250V		6h	**SCM360P6W** [1] [2] 1	**SCM3100P6W** [1] 1	**SCM360B6W** [1] 1	**SCM3100B6W** [1]
	277V		5h	**SCM360P5W** 1	**SCM3100P5W**	**SCM360B5W** 1	**SCM3100B5W**
	480V		7h	**SCM360P7W** 1	**SCM3100P7W**	**SCM360B7W**	**SCM3100B7W**
	550VDC		8h	**SCM360P8W** 1	**SCM3100P8W** 1	**SCM360B8W** 1	**SCM3100B8W** 1
3P 4W	125/250V		12h	**SCM460P12W** 1	**SCM4100P12W** 1	**SCM460B12W** 1	**SCM4100B12W** 1
	3Ø250V		9h	**SCM460P9W** [1] 1	**SCM4100P9W** [1] 1	**SCM460B9W** 1	**SCM4100B9W** 1
	380-415V		6h	**SCM460P6W** [1] [2] 1/6	**SCM4100P6W** [1] 1/6	**SCM460B6W** [1] 1/10	**SCM4100B6W** [1] 1/10
	3Ø480V		7h	**SCM460P7W** 1	**SCM4100P7W** 1	**SCM460B7W** 1	**SCM4100B7W** 1
	3Ø600V		5h	**SCM460P5W** 1	**SCM4100P5W** 1	**SCM460B5W** 1	**SCM4100B5W** 1
4P 5W	3ØY120/208V		9h	**SCM560P9W** [1] 1	**SCM5100P9W** [1] 1	**SCM560B9W** 1	**SCM5100B9W** 1
	200/346V 240/415V		6h	**SCM560P6W** [1] [2] 1/6	**SCM5100P6W** [1] 1/6	**SCM560B6W** [1] 1/10	**SCM5100B6W** [1] 1/10
	3ØY347/600V		5h	**SCM560P5W** 1	**SCM5100P5W** 1	**SCM560B5W** 1	**SCM5100B5W** 1
	400VDC		8h		**SCM5100P8W** 1		**SCM5100B8W** 1
	480V		7h	**SCM560P7W** 1	**SCM5100P7W** 1	**SCM560B7W** 1	**SCM5100B7W** 1

[1] Dual ratings - Products with dual classification: Series I (International) and Series II (North America)

[2] Products with dual certifications: UL listed (North America) and ENEC (International)

\- UL listed

NORTH AMERICAN RATINGS
Products certified by UL laboratories according to standards UL1682 and UL1686

ENEC certified
Products with dual certifications: UL listed (North America) and ENEC (International)

Terminals
Screw terminals

EUREKA[PIN&SLEEVE] Series

SCM.

Straight connectors IP67

Panel mounting sockets outlets IP67 [Straight outlet]

CONNECTOR				RECEPTACLE			
IP67							
				120x120mm		145x145mm	
CABLE GLAND							
60A		100A		60A		100A	
SCM360C3W	1			**SCM360R3W**	1		
SCM360C4W	1	**SCM3100C4W**		**SCM360R4W**	1	**SCM3100R4W**	
SCM360C6W [1][2]	1	**SCM3100C6W** [1]	1	**SCM360R6W** [1]	1	**SCM3100R6W** [1]	1
SCM360C5W	1	**SCM3100C5W**		**SCM360R5W**	1	**SCM3100R5W**	
SCM360C7W	1	**SCM3100C7W**		**SCM360R7W**	1	**SCM3100R7W**	
SCM360C8W	1	**SCM3100C8W**	1	**SCM360R8W**	1	**SCM3100R8W**	1
SCM460C12W	1	**SCM4100C12W**	1	**SCM460R12W**	1	**SCM4100R12W**	1
SCM460C9W [1]	1	**SCM4100C9W** [1]	1	**SCM460R9W**	1	**SCM4100R9W**	1
SCM460C6W [1][2]	1	**SCM4100C6W** [1]	1/6	**SCM460R6W** [1]	1/10	**SCM4100R6W** [1]	1/10
SCM460C7W	1	**SCM4100C7W**	1	**SCM460R7W**	1	**SCM4100R7W**	1
SCM460C5W	1	**SCM4100C5W**	1	**SCM460R5W**	1	**SCM4100R5W**	1
SCM560C9W [1]	1	**SCM5100C9W** [1]	1	**SCM560R9W**	1	**SCM5100R9W**	1
SCM560C6W [1][2]	1/6	**SCM5100C6W** [1]	1/6	**SCM560R6W** [1]	1/10	**SCM5100R6W** [1]	1/10
SCM560C5W	1	**SCM5100C5W**	1	**SCM560R5W**	1	**SCM5100R5W**	1
		SCM5100C8W	1			**SCM5100R8W**	1
SCM560C7W	1	**SCM5100C7W**	1	**SCM560R7W**	1	**SCM5100R7W**	1

Accessories

			EUREKA[PIN&SLEEVE] Series	
			SCM.	
Description	**IP**	**Version**	**Liquid tight adapters**	
LIQUID TIGHT ADAPTER	IP67	20A 3-4 WIRE 1/2″ NPT	**SCMSAA12**	5
		20A 5 WIRE 1/2″ NPT	**SCMSAB12**	5
		30A 3-4 WIRE 3/4″ NPT	**SCMSAB34**	5
		30A 5 WIRE 1″ NPT	**SCMSAC100**	5
		60A 3-4-5 WIRE 1¼″ NPT	**SCMSAC125**	5
		30A 5 WIRE 3/4″ NPT	**SCMSAC34**	5
		100A 3-4-5 WIRE 1¼″ NPT	**SCMSAD125**	5

- UL listed
- For attaching flexible liquidtight metal conduit to Scame EUREKA[PIN&SLEEVE] Series plugs and connectors

PIN & SLEEVE
Example of applications

Accessories

			EUREKA[PIN&SLEEVE] Series	
			SCM.	
Description	**IP**	**Version**	**Non-metallic Back-Boxes**	
BACK BOX	IP67	100x100mm - SMALL	**SCMBB01**	1/12
		120x120mm - MEDIUM	**SCMBB02**	1/12
		145x145mm - LARGE	**SCMBB03**	1/6

- For fixed plugs and sockets EUREKA Series [PIN&SLEEVE]
- UL listed

BACK-BOXES
Ground plate and ground terminals

Accessories

			ACCESSORIES
			570.
Description	**Current**	**Poles**	**Cover for IP66/IP67/IP69 plugs**
PLUG CAP	16A 20A	2P+E	**570.90163** 10/100
		3P+E	**570.90164** 10/100
		3P+N+E	**570.90165** 10/100
	30A 32A		**570.90325** 10/100
		2/3P+E	**570.90324** 10/100
	60A 63A	ALL	**570.9063** 10
	100A 125A		**570.9125** 10

ADVANCE-GRP[HD] Series - Interlocked-switch socket outlets >> Without base IP66/67/69 - Type 12, 3R, 4, 4X - Watertight

Without fuse carrier

Current	Poles	Volt	Colour	h	ADVANCE-GRP[PIN&SLEEVE] Series SCM. INTERLOCKED SOCKET IP66/IP67/IP69	
20A	2P 3W	125V		4h	**SCM320MI4W-NB**	1/6
		250V		6h	**SCM320MI6W-NB**	1/6
		480V		7h	**SCM320MI7W-NB**	1/6
	3P 4W	125/250V		12h	**SCM420MI12W-NB**	1/6
		3Ø250V		9h	**SCM420MI9W-NB**	1/6
		3Ø480V		7h	**SCM420MI7W-NB**	1/6
		3Ø600V		5h	**SCM420MI5W-NB**	1/6
	4P 5W	3ØY120/208V		9h	**SCM520MI9W-NB**	1/6
		3ØY347/600V		5h	**SCM520MI5W-NB**	1/6
		480V		7h	**SCM520MI7W-NB**	1/6
30A	2P 3W	125V		4h	**SCM330MI4W-NB**	1/6
		250V		6h	**SCM330MI6W-NB**	1/6
		480V		7h	**SCM330MI7W-NB**	1/6
	3P 4W	125/250V		12h	**SCM430MI12W-NB**	1/6
		3Ø250V		9h	**SCM430MI9W-NB**	1/6
		3Ø480V		7h	**SCM430MI7W-NB**	1/6
		3Ø600V		5h	**SCM430MI5W-NB**	1/6
	4P 5W	3ØY120/208V		9h	**SCM530MI9W-NB**	1/6
		3ØY347/600V		5h	**SCM530MI5W-NB**	1/6
		480V		7h	**SCM530MI7W-NB**	1/6
32A	3P 4W	380V 50Hz / 440V 60Hz		3h	**SCM432MI3W-NB**	1/6
60A	2P 3W	250V		6h	**SCM360MI6W-NB**	1
		480V		7h	**SCM360MI7W-NB**	1
	3P 4W	3Ø250V		9h	**SCM460MI9W-NB**	1
		3Ø600V		5h	**SCM460MI5W-NB**	1
	4P 5W	3ØY120/208V		9h	**SCM560MI9W-NB**	1
		3ØY347/600V		5h	**SCM560MI5W-NB**	1
		480V		7h	**SCM560MI7W-NB**	1/1

☼ With power indicating led

- UL listed
- To be matched with the respective bases
- Empty base: ADVANCE-GRP System (fam. 579)

c UL us LISTED
NORTH AMERICAN RATINGS
Products certified by UL laboratories
according to standards UL1682 and UL1686

Plugs and sockets for special applications

Plugs and sockets UL/CSA

ADVANCE-GRP[HD] Series - Interlocked-switch socket outlets >> Surface mounting IP66/67/69 - Type 12K, 3R, 4, 4X - Watertight

Without fuse carrier

Current	Poles	Volt	Colour	h	ADVANCE-GRP[PIN&SLEEVE] Series SCM. INTERLOCKED SOCKET IP66/IP67/IP69	
20A	2P 3W	125V		4h	**SCM320MI4W**	1/6
		250V		6h	**SCM320MI6W**	1/6
		480V		7h	**SCM320MI7W**	1/6
	3P 4W	125/250V		12h	**SCM420MI12W**	1/6
		3Ø250V		9h	**SCM420MI9W**	1/6
		3Ø480V		7h	**SCM420MI7W**	1/6
		3Ø600V		5h	**SCM420MI5W**	1/6
	4P 5W	3ØY120/208V		9h	**SCM520MI9W**	1/6
		3ØY347/600V		5h	**SCM520MI5W**	1/6
		480V		7h	**SCM520MI7W**	1/6
30A	2P 3W	125V		4h	**SCM330MI4W**	1/6
		250V		6h	**SCM330MI6W**	1/6
		480V		7h	**SCM330MI7W**	1/6
	3P 4W	125/250V		12h	**SCM430MI12W**	1/6
		3Ø250V		9h	**SCM430MI9W**	1/6
		3Ø480V		7h	**SCM430MI7W**	1/6
		3Ø600V		5h	**SCM430MI5W**	1/6
	4P 5W	3ØY120/208V		9h	**SCM530MI9W**	1/6
		3ØY347/600V		5h	**SCM530MI5W**	1/6
		480V		7h	**SCM530MI7W**	1/6
32A	3P 4W	380V 50Hz / 440V 60Hz		3h	**SCM432MI3W**	1/6
60A	2P 3W	250V		6h	**SCM360MI6W**	1
		480V		7h	**SCM360MI7W**	1
	3P 4W	3Ø250V		9h	**SCM460MI9W**	1
		3Ø480V		7h	**SCM460MI7W**	1
		3Ø600V		5h	**SCM460MI5W**	1
	4P 5W	3ØY120/208V		9h	**SCM560MI9W**	1
		3ØY347/600V		5h	**SCM560MI5W**	1
		480V		7h	**SCM560MI7W**	1/1

☼ With power indicating led

- UL listed
- Already supplied with simple single bottom

ADVANCE-GRP[HD] Series - Interlocked-switch socket outlets >> Surface mounting IP66/67/69 - Type 12K, 3R, 4, 4X - Watertight

					ADVANCE-GRP[PIN&SLEEVE] Series	
					SCM.	
					Without fuse carrier - With consumer units	
					INTERLOCKED SOCKET	
Current	**Poles**	**Volt**	**Colour**	**h**	IP66/IP67/IP69	
20A	2P 3W	125V		4h	**SCM320MI4W-C**	1/6
		250V		6h	**SCM320MI6W-C**	1/6
		480V		7h	**SCM320MI7W-C**	1/6
	3P 4W	125/250V		12h	**SCM420MI12W-C**	1/6
		3Ø250V		9h	**SCM420MI9W-C**	1/6
		3Ø480V		7h	**SCM420MI7W-C**	1/6
		3Ø600V		5h	**SCM420MI5W-C**	1/6
	4P 5W	3ØY120/208V		9h	**SCM520MI9W-C**	1/6
		3ØY347/600V		5h	**SCM520MI5W-C**	1/6
		480V		7h	**SCM520MI7W-C**	1/6
30A	2P 3W	125V		4h	**SCM330MI4W-C**	1/6
		250V		6h	**SCM330MI6W-C**	1/6
		480V		7h	**SCM330MI7W-C**	1/6
	3P 4W	125/250V		12h	**SCM430MI12W-C**	1/6
		3Ø250V		9h	**SCM430MI9W-C**	1/6
		3Ø480V		7h	**SCM430MI7W-C**	1/6
		3Ø600V		5h	**SCM430MI5W-C**	1/6
	4P 5W	3ØY120/208V		9h	**SCM530MI9W-C**	1/6
		3ØY347/600V		5h	**SCM530MI5W-C**	1/6
		480V		7h	**SCM530MI7W-C**	1/6
32A	3P 4W	380V 50Hz / 440V 60Hz		3h	**SCM432MI3W-C**	1/6
60A	2P 3W	250V		6h	**SCM360MI6W-C**	1
		480V		7h	**SCM360MI7W-C**	1
	3P 4W	3Ø250V		9h	**SCM460MI9W-C**	1
		3Ø480V		7h	**SCM460MI7W-C**	1
		3Ø600V		5h	**SCM460MI5W-C**	1
	4P 5W	3ØY120/208V		9h	**SCM560MI9W-C**	1
		3ØY347/600V		5h	**SCM560MI5W-C**	1
		480V		7h	**SCM560MI7W-C**	1

☼ With power indicating led

- UL listed
- Already supplied with single bottom with control unit for installation of protective switches or other devices from DIN guide

c UL us LISTED
NORTH AMERICAN RATINGS
Products certified by UL laboratories
according to standards UL1682 and UL1686

Plugs and sockets for special applications

Seven poles plugs and sockets

OPTIMA-SEVEN Series - IP44 versions

						OPTIMA-SEVEN Series			
						213.		240.	
						Plugs		**Surface mounting appliance inlets**	
						PLUG		APPLIANCE INLET	
						IP44			
Current	**Poles**	**Hz**	**Volt**	**Colour**	**h**	M25X1,5			
16A	6P+E	50Hz 60Hz	380-415V		6h	**213.1637-7**	10	**240.1697-7** [1] [2]	10
32A						**213.3237-7**	10	**240.3297-7** [1] [2]	10

[1] Open threaded cable entry
[2] Threaded cap/cable sleeve included
- Screw terminals

OPTIMA-SEVEN Series - IP66/IP67 versions

						OPTIMA-SEVEN Series			
						218.		245.	
						Plugs		**Surface mounting appliance inlets**	
						PLUG		APPLIANCE INLET	
						IP66/IP67			
Current	**Poles**	**Hz**	**Volt**	**Colour**	**h**	M25X1,5			
16A	6P+E	50Hz 60Hz	380-415V		6h	**218.1637-7**	10	**245.1697-7** [1] [2]	5
32A						**218.3237-7**	10	**245.3297-7** [1] [2]	5

[1] Open threaded cable entry
[2] Threaded cap/cable sleeve included
- Screw terminals

OPTIMA-SEVEN Series

243.		313.		413.		512.	
Flush mounting appliance inlets		**Connectors**		**Flush mounting socket outlets**		**Surface mounting socket outlets**	
APPLIANCE INLET		CONNECTOR		FLUSH-MOUNTING SOCKET		SURFACE MOUNTING SOCKET	
			IP44				
75x75mm				75x75mm			
		M25X1,5				M25X1,5	
243.1697-7	10	**313.1647-7**	10	**413.1667-7**	10	**512.1657-7** [1] [2]	10
243.3297-7	10	**313.3247-7**	10	**413.3267-7**	10	**512.3257-7** [1] [2]	10

OPTIMA-SEVEN Series

248.		318.		418.		517.	
Flush mounting appliance inlets		**Connectors**		**Flush mounting socket outlets**		**Surface mounting socket outlets**	
APPLIANCE INLET		CONNECTOR		FLUSH-MOUNTING SOCKET		SURFACE MOUNTING SOCKET	
			IP66/IP67				
75x75mm				75x75mm			
		M25X1,5				M25X1,5	
248.1697-7	10	**318.1647-7**	10	**418.1667-7**	10	**517.1657-7** [1] [2]	5
248.3297-7	10	**318.3247-7**	10	**418.3267-7**	10	**517.3257-7** [1] [2]	5

Plugs and sockets for special applications

OPTIMA-METAL Series - Industrial connectors

ALUMINIUM versions [lever closing] >> HDAL250 Type - Max 250A - Up to 1.000V

Socket

IP	Current	Poles	Volt	Cable section	OPTIMA-METAL Series 899. SOCKET	
IP67	250A	3P+E	1000V	50-70 mm²	**899.AL2DE350V** [1]	1
				70 mm²	**899.AL2DE370** [2]	1
				95 mm²	**899.AL2DE395** [2]	1
		3P+N+E		50-70 mm²	**899.AL2DE450V** [1]	1
				70 mm²	**899.AL2DE470** [2]	1

[1] Screw terminals
[2] Crimp terminals

Angled plug 60°

IP	Current	Poles	Volt	Cable section	OPTIMA-METAL Series 899. PLUG	
IP67	250A	3P+E	1000V	50-70 mm²	**899.AL2PR350V** [1]	1
				70 mm²	**899.AL2PR370** [2]	1
				95 mm²	**899.AL2PR395** [2]	1
		3P+N+E		50-70 mm²	**899.AL2PR450V** [1]	1
				70 mm²	**899.AL2PR470** [2]	1

[1] Screw terminals
[2] Crimp terminals

ALUMINIUM versions [lever closing] >> HDAL250 Type - Max 250A - Up to 1.000V

OPTIMA-METAL Series

899.

Connector

IP	Current	Poles	Volt	Cable section	CONNECTOR	
IP67	250A	3P+E	1000V	50-70 mm²	**899.AL2CE350VS** [1]	1
				70 mm²	**899.AL2CE370S** [2]	1
				95 mm²	**899.AL2CE395S** [2]	1
		3P+N+E		50-70 mm²	**899.AL2CE450VS** [1]	1
				70 mm²	**899.AL2CE470S** [2]	1

[1] Screw terminals
[2] Crimp terminals

APPLICATION EXAMPLE

Plugs and sockets for special applications

OPTIMA-METAL Series - Industrial connectors

ALUMINIUM versions [lever closing] >> HDAL500 Type - Max 570A - Up to 1.000V

Socket

IP	Current	Poles	Volt	Cable section	OPTIMA-METAL Series 899. SOCKET	
IP67	320A	3P+E	1000V	95 mm²	**899.AL5DE395**	1
		3P+N+E		120 mm²	**899.AL5DE412**	1
				150 mm²	**899.AL5DE415**	1
				95 mm²	**899.AL5DE495**	1
	370A	3P+E		120 mm²	**899.AL5DE312**	1
	420A			150 mm²	**899.AL5DE315**	1
				185 mm²	**899.AL5DE318**	1
		3P+N+E		150 mm²	**899.AL5DE415-16**	1
	500A			185 mm²	**899.AL5DE418-16**	1
	570A	3P+E		240 mm²	**899.AL5DE324-18**	1

- Crimp terminals

Angled plug 60°

IP	Current	Poles	Volt	Cable section	OPTIMA-METAL Series 899. PLUG	
IP67	320A	3P+E	1000V	95 mm²	**899.AL5PR395**	1
		3P+N+E		120 mm²	**899.AL5PR412**	1
				150 mm²	**899.AL5PR415**	1
				95 mm²	**899.AL5PR495**	1
	370A	3P+E		120 mm²	**899.AL5PR312**	1
	420A			150 mm²	**899.AL5PR315**	1
				185 mm²	**899.AL5PR318**	1
		3P+N+E		150 mm²	**899.AL5PR415-16**	1
	500A			185 mm²	**899.AL5PR418-16**	1
	570A	3P+E		240 mm²	**899.AL5PR324-18**	1

- Crimp terminals

ALUMINIUM versions [lever closing] >> HDAL500 Type - Max 570A - Up to 1.000V

Straight plug

IP	Current	Poles	Volt	Cable section	OPTIMA-METAL Series 899. PLUG	
IP67	320A	3P+E	1000V	95 mm²	**899.AL5PR395S**	1
		3P+N+E		120 mm²	**899.AL5PR412S**	1
				150 mm²	**899.AL5PR415S**	1
	370A	3P+E		95 mm²	**899.AL5PR495S**	1
				120 mm²	**899.AL5PR312S**	1
	420A			150 mm²	**899.AL5PR315S**	1
				185 mm²	**899.AL5PR318S**	1
		3P+N+E		150 mm²	**899.AL5PR415S-16**	1
	500A			185 mm²	**899.AL5PR418S-16**	1
	570A	3P+E		240 mm²	**899.AL5PR324S-18**	1

- Crimp terminals

Connector

IP	Current	Poles	Volt	Cable section	OPTIMA-METAL Series 899. CONNECTOR	
IP67	320A	3P+E	1000V	95 mm²	**899.AL5CE395S**	1
		3P+N+E		120 mm²	**899.AL5CE412S**	1
				150 mm²	**899.AL5CE415S**	1
	370A	3P+E		95 mm²	**899.AL5CE495S**	1
				120 mm²	**899.AL5CE312S**	1
	420A			150 mm²	**899.AL5CE315S**	1
				185 mm²	**899.AL5CE318S**	1
		3P+N+E		150 mm²	**899.AL5CE415S-16**	1
	500A			185 mm²	**899.AL5CE418S-16**	1
	570A	3P+E		240 mm²	**899.AL5CE324S-18**	1

- Crimp terminals

ALUMINIUM versions [lever closing] >> HDAL800 Type - Max 800A - Up to 1.000V

					OPTIMA-METAL Series	
					899.	
					Socket	
IP	**Current**	**Poles**	**Volt**	**Cable section**	SOCKET	
IP67	570A	3P+E	1000V	240 mm²	**899.AL8DF324**	1
		3P+N+E			**899.AL8DF424**	1
	800A	3P+E		300 mm²	**899.AL8DF330**	1
		3P+N+E			**899.AL8DF430**	1

- Crimp terminals

					OPTIMA-METAL Series	
					899.	
					Straight plug	
IP	**Current**	**Poles**	**Volt**	**Cable section**	PLUG	
IP67	570A	3P+E	1000V	240 mm²	**899.AL8PM324S**	1
		3P+N+E			**899.AL8PM424S**	1
	800A	3P+E		300 mm²	**899.AL8PM330S**	1
		3P+N+E			**899.AL8PM430S**	1

- Crimp terminals

ALUMINIUM versions [lever closing] >> HDAL800 Type - Max 800A - Up to 1.000V

Connector

IP	Current	Poles	Volt	Cable section	OPTIMA-METAL Series 899. CONNECTOR	
IP67	570A	3P+E	1000V	240 mm²	**899.AL8CF324S**	1
		3P+N+E			**899.AL8CF424S**	1
	800A	3P+E		300 mm²	**899.AL8CF330S**	1
		3P+N+E			**899.AL8CF430S**	1

- Crimp terminals

ALUMINIUM versions [lever closing]

Description	Notes	IP	OPTIMA-METAL Series 899. Accessories	
PLUG CAP	HDAL250	IP67	**899.AL2PC**	1
	HDAL500		**899.AL5PC**	1
	HDAL800		**899.AL8PC**	1

ALUMINIUM versions [screw closing] >> HDAS250 Type - Max 250A - Up to 1.000V

					OPTIMA-METAL Series	
					899.	
					Socket	
IP	**Current**	**Poles**	**Volt**	**Cable section**	SOCKET	
IP67	250A	3P+E	1000V	50-70 mm²	**899.AS2DE350V** 1	1
				70 mm²	**899.AS2DE370** 2	1
				95 mm²	**899.AS2DE395** 2	1
		3P+N+E		50-70 mm²	**899.AS2DE450V** 1	1
				70 mm²	**899.AS2DE470** 2	1

1 Screw terminals
2 Crimp terminals

					OPTIMA-METAL Series	
					899.	
					Straight plug	
IP	**Current**	**Poles**	**Volt**	**Cable section**	PLUG	
IP67	250A	3P+E	1000V	50-70 mm²	**899.AS2PR350V** 1	1
				70 mm²	**899.AS2PR370** 2	1
				95 mm²	**899.AS2PR395** 2	1
		3P+N+E		50-70 mm²	**899.AS2PR450V** 1	1
				70 mm²	**899.AS2PR470** 2	1

1 Screw terminals
2 Crimp terminals

ALUMINIUM versions [screw closing] >> HDAS250 Type - Max 250A - Up to 1.000V

					OPTIMA-METAL Series	
					899.	
					Appliance inlet	
IP	**Current**	**Poles**	**Volt**	**Cable section**	APPLIANCE INLET	
IP67	250A	3P+E	1000V	50-70 mm²	**899.AS2AR350V**[1]	1
				70 mm²	**899.AS2AR370**[2]	1
				95 mm²	**899.AS2AR395**[2]	1
		3P+N+E		50-70 mm²	**899.AS2AR450V**[1]	1
				70 mm²	**899.AS2AR470**[2]	1

[1] Screw terminals
[2] Crimp terminals

					OPTIMA-METAL Series	
					899.	
					Connector	
IP	**Current**	**Poles**	**Volt**	**Cable section**	CONNECTOR	
IP67	250A	3P+E	1000V	50-70 mm²	**899.AS2CE350V**[1]	1
				70 mm²	**899.AS2CE370**[2]	1
				95 mm²	**899.AS2CE395**[2]	1
		3P+N+E		50-70 mm²	**899.AS2CE450V**[1]	1
				70 mm²	**899.AS2CE470**[2]	1

[1] Screw terminals
[2] Crimp terminals

Plugs and sockets for special applications

OPTIMA-METAL Series - Industrial connectors

ALUMINIUM versions [screw closing] >> HDAS500 Type - Max 570A - Up to 1.000V

Socket

IP	Current	Poles	Volt	Cable section	OPTIMA-METAL Series 899. SOCKET	
IP67	320A	3P+E	1000V	95 mm²	**899.AS5DE395**	1
		3P+N+E		120 mm²	**899.AS5DE412**	1
				150 mm²	**899.AS5DE415**	1
	370A	3P+E		95 mm²	**899.AS5DE495**	1
	420A			120 mm²	**899.AS5DE312**	1
				150 mm²	**899.AS5DE315**	1
				185 mm²	**899.AS5DE318**	1
		3P+N+E		150 mm²	**899.AS5DE415-16**	1
	500A			185 mm²	**899.AS5DE418-16**	1
	570A	3P+E		240 mm²	**899.AS5DE324-18**	1

- Crimp terminals

Straight plug

IP	Current	Poles	Volt	Cable section	OPTIMA-METAL Series 899. PLUG	
IP67	320A	3P+E	1000V	95 mm²	**899.AS5PR395**	1
		3P+N+E		120 mm²	**899.AS5PR412**	1
				150 mm²	**899.AS5PR415**	1
	370A	3P+E		95 mm²	**899.AS5PR495**	1
	420A			120 mm²	**899.AS5PR312**	1
				150 mm²	**899.AS5PR315**	1
				185 mm²	**899.AS5PR318**	1
		3P+N+E		150 mm²	**899.AS5PR415-16**	1
	500A			185 mm²	**899.AS5PR418-16**	1
	570A	3P+E		240 mm²	**899.AS5PR324-18**	1

- Crimp terminals

ALUMINIUM versions [screw closing] >> HDAS500 Type - Max 570A - Up to 1.000V

OPTIMA-METAL Series

899.

Appliance inlet

IP	Current	Poles	Volt	Cable section	APPLIANCE INLET	
IP67	320A	3P+E	1000V	95 mm²	**899.AS5AR395**	1
		3P+N+E		120 mm²	**899.AS5AR412**	1
				150 mm²	**899.AS5AR415**	1
	370A	3P+E		95 mm²	**899.AS5AR495**	1
				120 mm²	**899.AS5AR312**	1
	420A			150 mm²	**899.AS5AR315**	1
				185 mm²	**899.AS5AR318**	1
		3P+N+E		150 mm²	**899.AS5AR415-16**	1
	500A			185 mm²	**899.AS5AR418-16**	1
	570A	3P+E		240 mm²	**899.AS5AR324-18**	1

- Crimp terminals

OPTIMA-METAL Series

899.

Connector

IP	Current	Poles	Volt	Cable section	CONNECTOR	
IP67	320A	3P+E	1000V	95 mm²	**899.AS5CE395**	1
		3P+N+E		120 mm²	**899.AS5CE412**	1
				150 mm²	**899.AS5CE415**	1
	370A	3P+E		95 mm²	**899.AS5CE495**	1
				120 mm²	**899.AS5CE312**	1
	420A			150 mm²	**899.AS5CE315**	1
				185 mm²	**899.AS5CE318**	1
		3P+N+E		150 mm²	**899.AS5CE415-16**	1
	500A			185 mm²	**899.AS5CE418-16**	1
	570A	3P+E		240 mm²	**899.AS5CE324-18**	1

- Crimp terminals

Plugs and sockets for special applications

OPTIMA-METAL Series - Industrial connectors

ALUMINIUM versions [screw closing] >> HDAS800 Type - Max 800A - Up to 1.000V

					OPTIMA-METAL Series	
					899.	
					Socket	
IP	**Current**	**Poles**	**Volt**	**Cable section**	SOCKET	
IP67	570A	3P+E	1000V	240 mm²	**899.AS8DF324**	1
		3P+N+E			**899.AS8DF424**	1
	800A	3P+E		300 mm²	**899.AS8DF330**	1
		3P+N+E			**899.AS8DF430**	1

- Crimp terminals

					OPTIMA-METAL Series	
					899.	
					Straight plug	
IP	**Current**	**Poles**	**Volt**	**Cable section**	PLUG	
IP67	570A	3P+E	1000V	240 mm²	**899.AS8PM324**	1
		3P+N+E			**899.AS8PM424**	1
	800A	3P+E		300 mm²	**899.AS8PM330**	1
		3P+N+E			**899.AS8PM430**	1

- Crimp terminals

ALUMINIUM versions [screw closing] >> HDAS800 Type - Max 800A - Up to 1.000V

					OPTIMA-METAL Series	
					899.	
					Appliance inlet	
IP	**Current**	**Poles**	**Volt**	**Cable section**	APPLIANCE INLET	
IP67	570A	3P+E	1000V	240 mm²	**899.AS8AM324**	1
		3P+N+E			**899.AS8AM424**	1
	800A	3P+E		300 mm²	**899.AS8AM330**	1
		3P+N+E			**899.AS8AM430**	1

- Crimp terminals

					OPTIMA-METAL Series	
					899.	
					Connector	
IP	**Current**	**Poles**	**Volt**	**Cable section**	CONNECTOR	
IP67	570A	3P+E	1000V	240 mm²	**899.AS8CF324**	1
		3P+N+E			**899.AS8CF424**	1
	800A	3P+E		300 mm²	**899.AS8CF330**	1
		3P+N+E			**899.AS8CF430**	1

- Crimp terminals

Plugs and sockets for special applications

OPTIMA-METAL Series - Industrial connectors

ALUMINIUM versions [screw closing]

			OPTIMA-METAL Series	
			899.	
Description	**Notes**	**IP**	**Accessories**	
CAP	HDAS250	IP67	**899.AS2PC**	1
	HDAS500		**899.AS5PC**	1
	HDAS800		**899.AS8PC**	1

SWITCHED INTERLOCKED SOCKETS versions [lever closing] >> HDIN250 Type - 250A

OPTIMA-METAL Series

899.

Poles	Volt	With switch-disconnector	With switch-disconnector and fuse	With MCCB	With MCCB & RCD
		INTERLOCKED SOCKET			
		IP67			
		250A			
3P+E	440V				**899.IN25086RM** [2] 1
	690V	**899.IN25086** 1	**899.IN25086F** 1	**899.IN25086M** [1] 1	
3P+N+E	440V				**899.IN25087RM** [2] 1
	690V	**899.IN25087** 1	**899.IN25087F** 1	**899.IN25087M** [1] 1	

[1] MCCB = Molded case circuit breaker with thermal magnetic trip unit

[2] MCCB & RCD = Molded case circuit breaker with thermal magnetic and residual current release trip unit

- To be mated with HDAL250 plugs

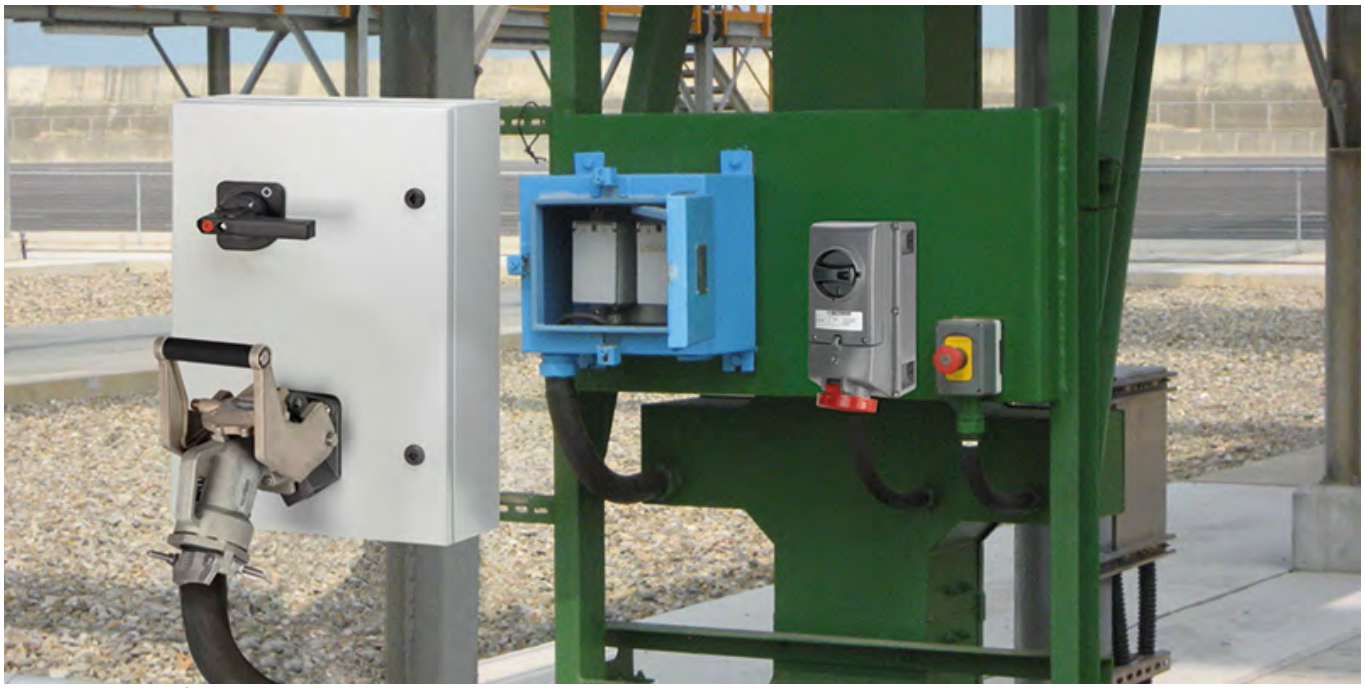

OPTIMA-METAL Series
Application example

Plugs and sockets for special applications

OPTIMA-METAL Series - Industrial connectors

ALUMINIUM versions [disconnectors] >> HDSD200 Type - 200A/250A

				OPTIMA-METAL Series		
				899.		
				Appliance inlet	**Socket**	**Plug**
				APPLIANCE INLET	SOCKET	PLUG
Current	**Poles**	**Volt**	**h**		IP67	
200A	3P+N+E	380-440V	6h			**899.SD2P3NE01** [1] 1
250A	3P+E	220-250V	6h	**899.SD2A3OE03** 1	**899.SD2D3OE03** 1	**899.SD2P3OE03** [1] 1
		380-440V	6h	**899.SD2A3OE01** 1	**899.SD2D3OE01** 1	**899.SD2P3OE01** [1] 1
	3P+N+E		6h	**899.SD2A3NE01** 1	**899.SD2D3NE01** 1	

[1] Rubber handle

- Screw terminals

ALUMINIUM versions [disconnectors]

		OPTIMA-METAL Series		
		899.		
Description	**IP**	**Accessories: handles**		
RUBBER HANDLES	IP67	**899.SD2G** 1		
ALUMINUM HANDLES	IP67		**899.SD2GM** 1	
ANGLED ALUMINUM HANDLES	IP67			**899.SD2GMA** 1

ALUMINIUM versions [disconnectors]

Description	IP	OPTIMA-METAL Series 899.		
			Accessories: box and plug cap	
FLUSH MOUNTING BOX	IP67	**899.SD2LB**[1] 1		
SURFACE MOUNTING BOX				**899.SD2WAS**[1] 1
PLUG CAP			**899.SD2PC** 1	

[1] For fixed plugs and sockets

1.5

Switchgears

- COMMAND Series
  Low-voltage rotary switchgear and controlgear
- ISOLATORS Series
  Switch-disconnectors IP65
- TOP22 Series
  Control and signalling accessories

SCAME

Switch disconnectors

				COMMAND Series 590.			
				Base mounting [16A-40A]			
Version	**Current**	**Poles**	**Switch size**	SWITCH DISCONNECTOR			
BOX (B)	16A	2P	Y1	**590.YA162B** [1]	6		
		3P		**590.YA163B** [1]	6		
		4P		**590.YA164B** [1]	6		
		3P+N		**590.YA165B** [2] [1]	6		
		6P	Y3			**590.YA166B** [3] [4]	6
		8P				**590.YA168B** [3] [2] [4]	6
	20A	2P	Y1	**590.YA202B** [1]	6		
		3P		**590.YA203B** [1]	6		
		4P		**590.YA204B** [1]	6		
		3P+N		**590.YA205B** [2] [1]	6		
	25A	6P	Y3			**590.YA256B** [3] [4]	6
		8P				**590.YA258B** [3] [2] [4]	6
	32A	2P	Y1	**590.YA322B** [1]	6		
		3P		**590.YA323B** [1]	6		
		4P		**590.YA324B** [1]	6		
		3P+N		**590.YA325B** [2] [1]	6		
		6P	Y3			**590.YA326B** [3] [4]	6
		8P				**590.YA328B** [3] [2] [4]	6
	40A	2P	Y1	**590.YA402B** [1]	6		
		3P		**590.YA403B** [1]	6		
		4P		**590.YA404B** [1]	6		
		3P+N		**590.YA405B** [2] [1]	6		
		6P	Y3			**590.YA406B** [3] [4]	6
		8P				**590.YA408B** [3] [2] [4]	6

[1] DIN rail fixing
[2] With late break and early make neutral pole
[3] Equipped with direct handle
[4] DIN rail / screw fixing
- BOX (B) = Base mounting

Switch disconnectors

				COMMAND Series		
				590.		
					Base mounting [63A-160A]	
Version	**Current**	**Poles**	**Switch size**	SWITCH DISCONNECTOR		
BOX (B)	63A	2P	Y2	**590.YA632B** [4] 6		
		3P		**590.YA633B** [4] 6		
		4P		**590.YA634B** [4] 6		
		3P+N		**590.YA635B** [3] [4] 6		
		6P	Y4		**590.YA636B** [1] [2] 6	
		8P			**590.YA638B** [1] [3] [2] 6	
	80A	2P	Y2	**590.YA802B** [4] 6		
		3P		**590.YA803B** [4] 6		
		4P		**590.YA804B** [4] 6		
		3P+N		**590.YA805B** [3] [4] 6		
		6P	Y4		**590.YA806B** [1] [2] 6	
		8P			**590.YA808B** [1] [3] [2] 6	
	100A	3P			**590.YA1003B** [1] [2] 6	
		4P			**590.YA1004B** [1] [2] 6	
		3P+N			**590.YA1005B** [1] [3] [2] 6	
		6P			**590.YA1006B** [1] [2] 6	
		8P			**590.YA1008B** [1] [3] [2] 6	
	125A	3P	Y5			**590.YA1253B** [1] [2] 6
		3P+N				**590.YA1255B** [1] [3] [2] 6
		6P				**590.YA1256B** [1] [2] 6
		8P				**590.YA1258B** [1] [3] [2] 6
	160A	3P				**590.YA1603B** [1] [2] 5
		3P+N				**590.YA1605B** [1] [3] [2] 5
		6P				**590.YA1606B** [1] [2] 6
		8P				**590.YA1608B** [1] [3] [2] 6

[1] Equipped with direct handle
[2] DIN rail / screw fixing
[3] With late break and early make neutral pole
[4] DIN rail fixing
- BOX (B) = Base mounting

Switch disconnectors

				COMMAND Series			
				590.			
				Panel mounting			
Version	**Current**	**Poles**	**Switch size**	SWITCH DISCONNECTOR			
REAR (R)	16A	2P	Y1	**590.YA162R**	6		
		3P		**590.YA163R**	6		
		4P		**590.YA164R**	6		
		3P+N		**590.YA165R** [1]	6		
	32A	2P		**590.YA322R**	6		
		3P		**590.YA323R**	6		
		4P		**590.YA324R**	6		
		3P+N		**590.YA325R** [1]	6		
	40A	2P		**590.YA402R**	6		
		3P		**590.YA403R**	6		
		4P		**590.YA404R**	6		
		3P+N		**590.YA405R** [1]	6		
	63A	2P	Y2			**590.YA632R**	6
		3P				**590.YA633R**	6
		4P				**590.YA634R**	6
		3P+N				**590.YA635R** [1]	6
	80A	2P				**590.YA802R**	6
		3P				**590.YA803R**	6
		4P				**590.YA804R**	6
		3P+N				**590.YA805R** [1]	6
	100A	3P				**590.YA1003R**	6
		4P				**590.YA1004R**	6

[1] With late break and early make neutral pole

- REAR (R) = Panel mounting

Switch disconnectors

				COMMAND Series	
				590.	
				Base mounting [160A-1600A]	
Version	**Current**	**Poles**	**Switch size**	SWITCH DISCONNECTOR	
BOX (B)	160A	3P	K1	**590.K16003B**	1
		3P+N		**590.K16005B** [1]	1
	200A	3P	K2	**590.K20003B**	1
		3P+N		**590.K20005B** [1]	1
	250A	3P		**590.K25003B**	1
		3P+N		**590.K25005B** [1]	1
	315A	3P	K3	**590.K31503B**	1
		3P+N		**590.K31505B** [1]	1
	400A	3P		**590.K40003B**	1
		3P+N		**590.K40005B** [1]	1
	500A	3P		**590.K50003B**	1
		3P+N		**590.K50005B** [1]	1
	630A	3P	K4	**590.K63003B**	1
		3P+N		**590.K63005B** [1]	1
	800A	3P	K5	**590.K80003B**	1
		3P+N		**590.K80005B** [1]	1
	1000A	3P		**590.K100003B**	1
		3P+N		**590.K100005B** [1]	1
	1250A	3P		**590.K125003B**	1
		3P+N		**590.K125005B** [1]	1
	1600A	3P	K6	**590.K160003B**	1
		3P+N		**590.K160005B** [1]	1

[1] With late break and early make neutral pole

- Handle padlockable in OFF only (3 padlocks)
- Door interlock handle and 200mm shaft included
- BOX (B) = Base mounting
- Screw fixing

Switch disconnectors [DC - Direct Current]

				COMMAND Series 590.		
					Base mounting - Direct current (DC)	
Version	**Current**	**Poles in series**	**Switch size**	SWITCH DISCONNECTOR		
BOX (B)	15A	4	D1	**590.DC0815** [2] 6		
	16A		Y1		**590.DC0416** [1] 6	
	20A	5	D3		**590.DC0820** [2] 6	
	25A	6			**590.DC0825** [2] 6	
	30A	8			**590.DC0830** [2] 6	
	40A		D5			**590.DC0840** [2] 6

[1] DIN rail fixing
[2] DIN rail / screw fixing
- Equipped with direct handle
- Links already wired
- BOX (B) = Base mounting

Switch disconnectors [FUSES]

					COMMAND Series 590.	
					Base mounting - With fuse carrier [Type gG] 16A - 32A	
Version	**Current**	**Poles**	**Switch size**	**Fuse type**	SWITCH DISCONNECTOR FUSES	
BOX (B)	16A	2P	F1	gG 10,3x38mm	**590.YF162B** 6	
		3P			**590.YF163B** 6	
		4P			**590.YF164B** 6	
		3P+N			**590.YF165B** [1] 6	
	32A	2P			**590.YF322B** 6	
		3P			**590.YF323B** 6	
		4P			**590.YF324B** 6	
		3P+N			**590.YF325B** [1] 6	

[1] With late break and early make neutral pole
- Fuses not supplied
- BOX (B) = Base mounting
- DIN rail fixing

Switch disconnectors [FUSES]

Base mounting with fuse carrier [Type BS]
63A - 630A

Version	Current	Poles	Switch size	Fuse type	COMMAND Series 590. SWITCH DISCONNECTOR FUSES	
BOX (B)	63A	3P	KF1	BS	**590.KFB6303B**	1
		3P+N			**590.KFB6305B** [1]	1
	80A	3P			**590.KFB8003B**	1
		3P+N			**590.KFB8005B** [1]	1
	100A	3P	KF2		**590.KFB10003B**	1
		3P+N			**590.KFB10005B** [1]	1
	125A	3P			**590.KFB12503B**	1
		3P+N			**590.KFB12505B** [1]	1
	160A	3P			**590.KFB16003B**	1
		3P+N			**590.KFB16005B** [1]	1
	200A	3P	KF3		**590.KFB20003B**	1
		3P+N			**590.KFB20005B** [1]	1
	250A	3P			**590.KFB25003B**	1
		3P+N			**590.KFB25005B** [1]	1
	315A	3P	KF4		**590.KFB31503B**	1
		3P+N			**590.KFB31505B** [1]	1
	400A	3P			**590.KFB40003B**	1
		3P+N			**590.KFB40005B** [1]	1
	630A	3P	KF5		**590.KFB63003B**	1
		3P+N			**590.KFB63005B** [1]	1

[1] With late break and early make neutral pole

- Handle padlockable in OFF only (3 padlocks)
- Door interlock handle and 200mm shaft included
- Fuses not supplied
- BOX (B) = Base mounting
- Screw fixing

Switch disconnectors [FUSES]

					COMMAND Series	
					590.	
					Base mounting - With fuse carrier [Type DIN-NH] 63A - 630A	
Version	**Current**	**Poles**	**Switch size**	**Fuse type**	SWITCH DISCONNECTOR FUSES	
BOX (B)	63A	3P	KF1	DIN-HN	**590.KFD6303B**	1
		3P+N			**590.KFD6305B** [1]	1
	80A	3P			**590.KFD8003B**	1
		3P+N			**590.KFD8005B** [1]	1
	100A	3P	KF2		**590.KFD10003B**	1
		3P+N			**590.KFD10005B** [1]	1
	125A	3P			**590.KFD12503B**	1
		3P+N			**590.KFD12505B** [1]	1
	160A	3P			**590.KFD16003B**	1
		3P+N			**590.KFD16005B** [1]	1
	200A	3P	KF3		**590.KFD20003B**	1
		3P+N			**590.KFD20005B** [1]	1
	250A	3P			**590.KFD25003B**	1
		3P+N			**590.KFD25005B** [1]	1
	315A	3P	KF4		**590.KFD31503B**	1
		3P+N			**590.KFD31505B** [1]	1
	400A	3P			**590.KFD40003B**	1
		3P+N			**590.KFD40005B** [1]	1
	630A	3P	KF5		**590.KFD63003B**	1
		3P+N			**590.KFD63005B** [1]	1

[1] With late break and early make neutral pole

- Handle padlockable in OFF only (3 padlocks)
- Door interlock handle and 200mm shaft included
- Fuses not supplied
- BOX (B) = Base mounting
- Screw fixing

I-O-II
Change-Over Switches [I-O-II]

Change-over switches [I-O-II]

Base mounting

Version	Current	Poles	Switch size	COMMAND Series 590. CHANGE OVER SWITCH	
BOX (B)	16A	3P	C1	**590.YA163B-C**	6
		3P+N		**590.YA165B-C** [1]	6
	25A	3P		**590.YA253B-C**	6
		3P+N		**590.YA255B-C** [1]	6
	32A	3P		**590.YA323B-C**	6
		3P+N		**590.YA325B-C** [1]	6
	40A	3P		**590.YA403B-C**	6
		3P+N		**590.YA405B-C** [1]	6
	63A	3P	C2	**590.YA633B-C**	6
		3P+N		**590.YA635B-C** [1]	6
	80A	3P		**590.YA803B-C**	6
		3P+N		**590.YA805B-C** [1]	6
	100A	3P		**590.YA1003B-C**	6
		3P+N		**590.YA1005B-C** [1]	6
	125A	3P	C3	**590.YA1253B-C**	6
		3P+N		**590.YA1255B-C** [1]	6
	160A	3P		**590.YA1603B-C**	6
		3P+N		**590.YA1605B-C** [1]	6

[1] With late break and early make neutral pole

- Handle padlockable in OFF (1 padlock) position
- Equipped with direct handle
- BOX (B) = Base mounting

Accessories

Front operator handles 48X48mm

Switch size	Ø	Dimension	COMMAND Series 590. FRONT OPERATOR IP65 EMERGENCY		GENERAL	
F1 Y1	standard	48x48mm	**590.YM48B1** [1]	1/10	**590.YM48B2** [1]	1/10
			590.YM48R1 [2]	1/10	**590.YM48R2** [2]	1/10
	ø22mm		**590.YM50B1** [1]	10	**590.YM50B2** [1]	10
			590.YM50R1 [2]	10	**590.YM50R2** [2]	10

[1] For base mounting version with door interlock (B)
[2] For panel mounting version (R)
- Shaft not included (to buy separately)
- For general use and emergency switches.
- Handle not padlockable

Front operator handles 48X48mm - Padlockable

Switch size	Ø	Dimension	COMMAND Series 590. FRONT OPERATOR PADLOCKABLE IP65 EMERGENCY		GENERAL	
F1 Y1	standard	48x48mm	**590.YM49B1** [1]	1/10	**590.YM49B2** [1]	1/10
			590.YM49R1 [2]	1/10	**590.YM49R2** [2]	1/10
	ø22mm		**590.YM51B1** [1]	10	**590.YM51B2** [1]	10
			590.YM51R1 [2]	10	**590.YM51R2** [2]	10

[1] For base mounting version with door interlock (B)
[2] For panel mounting version (R)
- Shaft not included (to buy separately)
- For general use and emergency switches.
- Handle padlockable in OFF only (3 padlocks)

Accessories

Front operator handles 67X67mm

Switch size	Ø	Dimension	COMMAND Series 590. FRONT OPERATOR PADLOCKABLE IP65 EMERGENCY		GENERAL	
F1 Y1	standard	67x67mm	**590.YM67B1** [1]	1/10	**590.YM67B2** [1]	1/10
			590.YM67R1 [2]	1/10	**590.YM67R2** [2]	1/10
	ø22mm		**590.YM68B1** [1]	10	**590.YM68B2** [1]	10
			590.YM68R1 [2]	10	**590.YM68R2** [2]	10
Y2	standard		**590.YM67B6** [1]	1/10	**590.YM67B7** [1]	1/10
			590.YM67R6 [2]	1/10	**590.YM67R7** [2]	1/10
	ø22mm		**590.YM68B6** [1]	10	**590.YM68B7** [1]	10

[1] For base mounting version with door interlock (B)
[2] For panel mounting version (R)
- Shaft not included (to buy separately)
- For general use and emergency switches.
- Handle padlockable in OFF only (3 padlocks)

Front operator handles Ø80mm

Switch size	Ø	Dimension	COMMAND Series 590. FRONT OPERATOR PADLOCKABLE IP65 EMERGENCY		GENERAL	
Y3 Y4 Y5	ø22mm	Ø80mm	**590.YM80B1**	5	**590.YM80B2**	5
C1 C2 C3					**590.YM80B2-C**	1/10

- Shaft not included (to buy separately)
- Handle padlockable in OFF only (3 padlocks)
- For base mounting version with door interlock (B)

Accessories

		COMMAND Series	
		590.	
		Front operator handles 70x87mm	
		FRONT OPERATOR FOR SWITCHES	
		EMERGENCY	GENERAL
Switch size	**Dimension**		
Y1	70x87mm	**590.YM70R1** 10	**590.YM70R2** 10
Y2		**590.YM70R6** 10	**590.YM70R7** 10

- For general use and emergency switches.
- They can only be applied to SCAME enclosure system 70x87mm socket cut out
- Handle padlockable in OFF only (3 padlocks)
- For panel mounting version (R)
- Shaft included

				COMMAND Series
				590.
Description	**IP**	**Colour**	**Switch size**	**Direct handle**
DIRECT HANDLE	IP65		F1 Y1	**590.YMC1** 10
			Y2	**590.YMC2** 10

- Shaft included
- For base mounting version (B)

Accessories

	COMMAND Series
	590.

Description	Switch size	Direct handle kit for DIN rail window	
WINDOW FOR DIN RAIL	Y1	**590.YMDIN**	10

- Shaft included
- For base mounting version (B)

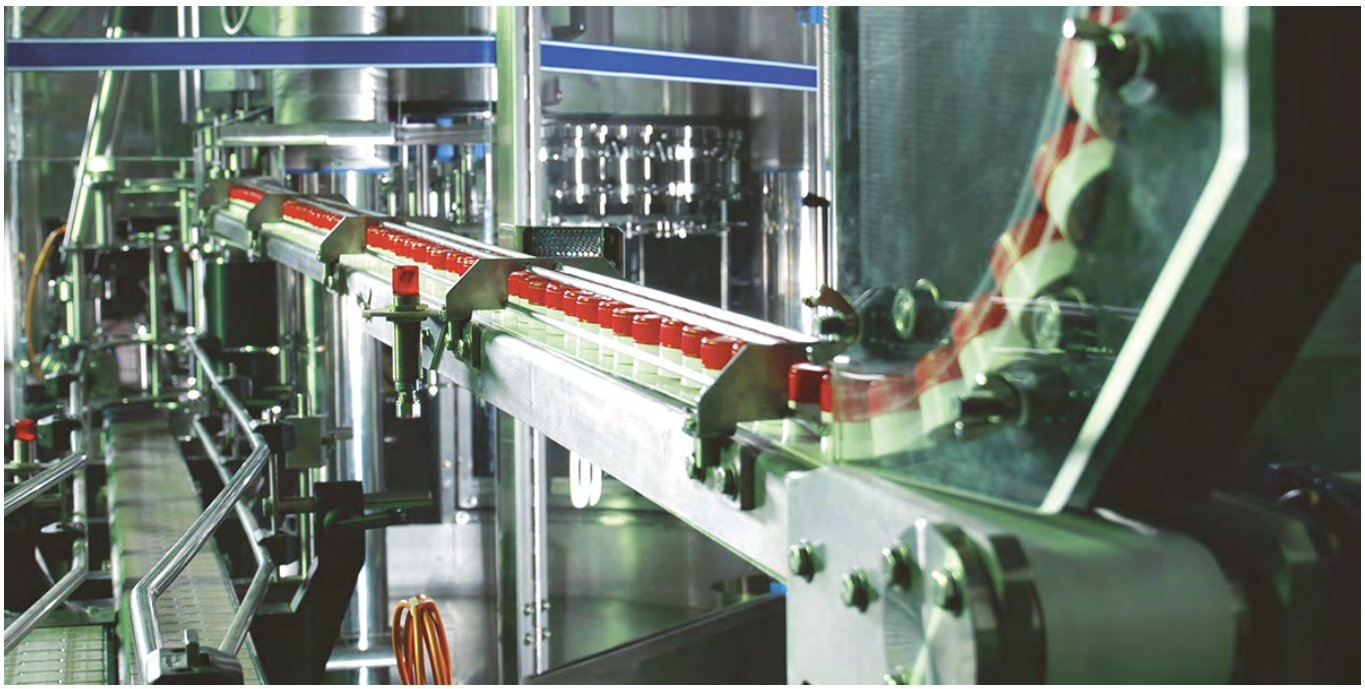

APPLICATION EXAMPLE

Accessories

Description	IP	Version	Switch size	Notes	COMMAND Series 590. Front operator handles	
FRONT OPERATOR	IP65	EMERGENCY	KF1 KF2 K2		**590.KMM100EM**	10
			KF3 KF4 K3 K4		**590.KMM300EM**	10
			KF5 K5	DOUBLE	**590.KMM550EM**	10
					590.KMM500EM	10
			K6	DOUBLE	**590.KMM600EM**	10
		GENERAL	KF1 KF2 K2		**590.KMM100GE**	10
			KF3 KF4 K3 K4		**590.KMM300GE**	10
			KF5 K5	DOUBLE	**590.KMM550GE**	10
					590.KMM500GE	10
			K6	DOUBLE	**590.KMM600GE**	10

- Shaft not included (to buy separately)
- Handle padlockable in OFF only (3 padlocks)
- For base mounting version (B)

Double
Door interlock handle: "double" handle

Accessories

Description	Switch size	Dimension	Notes	COMMAND Series 590. Shaft for front operator handles	
SHAFT	KF1 KF2 K2	200mm		**590.KMA200A**	10
		300mm		**590.KMA300A**	10
		400mm		**590.KMA400A**	10
	KF3 KF4 KF5 K3 K4 K5	200mm		**590.KMA200B**	10
		300mm		**590.KMA300B**	10
		400mm		**590.KMA400B**	10
	F1 Y1	185mm		**590.YMA185**	10/100
		300mm	[5x5mm]	**590.YMA300**	10
		70mm		**590.YMA070**	10/100
		85mm		**590.YMA085**	10/100
	Y2	185mm		**590.YMB185**	10/100
		300mm	[6x6mm]	**590.YMB300**	10
		85mm		**590.YMB085**	10/100
	Y3 Y4 Y5 D1 D3 D5	100mm		**590.YMA101**	10/100
		200mm	[5x5mm]	**590.YMA201**	10/100
		300mm		**590.YMA301**	10/100

- To buy along with front operator handle
- For base mounting version (B)

Description	Switch size	COMMAND Series 590. Shaft-hub	
SHAFT-HUB REINFORCING RING	Y3 Y4 Y5 C1 C2 C3 D1 D3 D5	**590.YMZZ**	10/50

- Assembled instead of the handle, it reduces the switch height by 5mm
- To buy along with front operator handle
- For base mounting version (B)

Accessories

	ADVANCE 2 System	OMNIA System
	576.	572.

Single junction box

IP	Notes	Dimension	ENCLOSURE FOR SWITCH		
IP66	ADVANCE2	136x150x105mm	**576.4390** [3]	6	
IP67	OMNIA	136x125x85mm			**572.3390** [1] [2] 6

[1] Blank side with drilling point mark

[2] IP67 when assembled together with the relevant component.

[3] Metric break-through cable entry

- For fitting with Y1 switch size panel mounting version (R) and relevant front operators handless (IP65).

	COMMAND Series
	590.

Description	Switch size	Suitable for	Terminal protection cover	
TERMINAL PROTECTION COVER	KF1	TOP TERMINALS	**590.KMT11**	10
		BOTTOM TERMINALS	**590.KMT12**	10
	KF2 K2	TOP TERMINALS	**590.KMT21**	10
		BOTTOM TERMINALS	**590.KMT22**	10
	KF3 K3	TOP TERMINALS	**590.KMT31**	10
		BOTTOM TERMINALS	**590.KMT32**	10
	KF4 K4	TOP TERMINALS	**590.KMT41**	10
		BOTTOM TERMINALS	**590.KMT42**	10
	KF5 K5	TOP TERMINALS	**590.KMT51**	10
		BOTTOM TERMINALS	**590.KMT52**	10

Accessories

		COMMAND Series 590.	
Description	**Switch size**	**Protection screen fuses**	
PROTECTION SCREEN FUSES	KF1	**590.KFS1**	1/6
	KF2	**590.KFS2**	1/6
	KF3	**590.KFS3**	1/10
	KF4	**590.KFS4**	1/10
	KF5	**590.KFS5**	1/10

			TOP22 Series 590.	
Description	**Colour**	**Switch size**	**Contact blocks**	
NC CONTACT		Y1	**590.PL004001** [1]	10/60
		Y2	**590.PL004003** [1]	10
NO CONTACT		Y1	**590.PL004002** [2]	10/60
		Y2	**590.PL004004** [2]	10

[1] NC=Normally closed
[2] NO=Normally open
- Snap catch

Accessories

			TOP22 Series 590.	
Description	**Switch size**	**Notes**	**Contact blocks**	
CHANGE OVER CONTACT	Y3 Y4 Y5 C1 C2 C3	15A 250V~ - 10A 415V~	**590.PL005**	50

- Break before main contacts

		TOP22 Series 590.	
Description	**Switch size**	**Contact blocks**	
AUXILIARY CONTACT 1NA+1NC	KF1 KF2 K2	**590.PL006011**	10
	KF3 KF5 K3 K5 K6	**590.PL006012**	10
	KF4 K4	**590.PL006013**	10
AUXILIARY CONTACT 2NA+2NC	KF1 KF2 K2	**590.PL006021**	10
	KF3 KF5 K3 K5 K6	**590.PL006022**	10
	KF4 K4	**590.PL006023**	10

- Break before main contacts

Enclosed switch disconnectors >> Flush mounting - Thermoplastic version [OMNIA enclosure]

ISOLATORS Series

590.

For emergency switching

For general use

Current	Poles	Switch size	Dimension	SWITCH DISCONNECTOR IP65 EMERGENCY		SWITCH DISCONNECTOR IP65 GENERAL	
20A	2P	Y1	136x125mm	**590.ER2002** [3]	1/12	**590.GR2002** [1]	1/12
	3P			**590.ER2003** [3]	1/12	**590.GR2003** [1]	1/12
	4P			**590.ER2004** [3]	1/12	**590.GR2004** [1]	1/12
	3P+N			**590.ER2005** [3] [2]	1/12	**590.GR2005** [1] [2]	1/12
32A	2P			**590.ER3202** [3]	1/12	**590.GR3202** [1]	1/12
	3P			**590.ER3203** [3]	1/12	**590.GR3203** [1]	1/12
	4P			**590.ER3204** [3]	1/12	**590.GR3204** [1]	1/12
	3P+N			**590.ER3205** [3] [2]	1/12	**590.GR3205** [1] [2]	1/12
40A	2P			**590.ER4002** [3]	1/12	**590.GR4002** [1]	1/12
	3P			**590.ER4003** [3]	1/12	**590.GR4003** [1]	1/12
	4P			**590.ER4004** [3]	1/12	**590.GR4004** [1]	1/12
	3P+N			**590.ER4005** [3] [2]	1/12	**590.GR4005** [1] [2]	1/12

[1] Handle padlockable in OFF (3 padlocks) and ON (1 padlock) position
[2] With late break and early make neutral pole
[3] Handle padlockable in OFF only (3 padlocks)
- With panel mounting version (R) switch

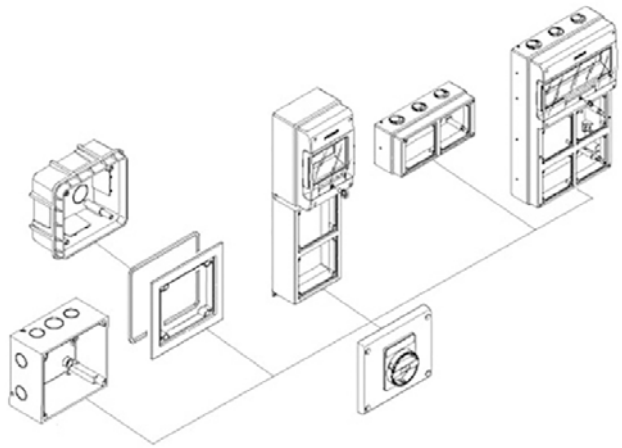

Enclosed switch disconnectors >> Surface mounting - Thermoplastic version [16A÷40A] [OMNIA enclosure]

ISOLATORS Series

590.

For emergency

For general use

				SWITCH DISCONNECTOR IP65			
				EMERGENCY		GENERAL	
Current	**Poles**	**Switch size**	**Dimension**				
20A	2P	Y1	136x125x84mm	**590.EM2002** [3]	1/12	**590.GE2002** [1]	1/12
	3P			**590.EM2003** [3]	1/12	**590.GE2003** [1]	1/12
	4P			**590.EM2004** [3]	1/12	**590.GE2004** [1]	1/12
	3P+N			**590.EM2005** [3] [2]	1/12	**590.GE2005** [1] [2]	1/12
32A	2P			**590.EM3202** [3]	1/12	**590.GE3202** [1]	1/12
	3P			**590.EM3203** [3]	1/12	**590.GE3203** [1]	1/12
	4P			**590.EM3204** [3]	1/12	**590.GE3204** [1]	1/12
	3P+N			**590.EM3205** [3] [2]	1/12	**590.GE3205** [1] [2]	1/12
40A	2P			**590.EM4002** [3]	1/12	**590.GE4002** [1]	1/12
	3P			**590.EM4003** [3]	1/12	**590.GE4003** [1]	1/12
	4P			**590.EM4004** [3]	1/12	**590.GE4004** [1]	1/12
	3P+N			**590.EM4005** [3] [2]	1/12	**590.GE4005** [1] [2]	1/12

[1] Handle padlockable in OFF (3 padlocks) and ON (1 padlock) position
[2] With late break and early make neutral pole
[3] Handle padlockable in OFF only (3 padlocks)

- OMNIA Series enclosure
- Blank side with drilling point mark
- Equipped with door interlock

Enclosed switch disconnectors >> Surface mounting - Thermoplastic version [16A÷40A] GE

ISOLATORS Series

590.

For general use [SPECIAL]

For general use

SWITCH DISCONNECTOR
IP65
GENERAL

Current	Poles	Switch size	Dimension				
16A	6P	Y3	155x210x107mm	**590.EL1606**	1/5	**590.GE1606**	1/5
	8P			**590.EL1608** [1]	1/5	**590.GE1608** [1]	1/5
20A	2P	Y1	105x150x82mm	**590.EL2012**	1/12	**590.GE2012**	1/12
	3P			**590.EL2013**	1/12	**590.GE2013**	1/12
	4P					**590.GE2014**	1/12
	3P+N			**590.EL2015** [1]	1/12	**590.GE2015** [1]	1/12
25A	6P	Y3	155x210x107mm	**590.EL2506**	1/5	**590.GE2506**	1/5
	8P			**590.EL2508** [1]	1/5	**590.GE2508** [1]	1/5
32A	2P	Y1	105x150x82mm	**590.EL3212**	1/12	**590.GE3212**	1/12
	3P			**590.EL3213**	1/12	**590.GE3213**	1/12
	4P					**590.GE3214**	1/12
	3P+N			**590.EL3215** [1]	1/12	**590.GE3215** [1]	1/12
	6P	Y3	155x210x107mm	**590.EL3206**	1/5	**590.GE3206**	1/5
	8P			**590.EL3208** [1]	1/5	**590.GE3208** [1]	1/5
40A	2P	Y1	105x150x82mm	**590.EL4012**	1/12	**590.GE4012**	1/12
	3P			**590.EL4013**	1/12	**590.GE4013**	1/12
	4P					**590.GE4014**	1/12
	3P+N			**590.EL4015** [1]	1/12	**590.GE4015** [1]	1/12
	6P	Y3	155x210x107mm	**590.EL4006**	1/5	**590.GE4006**	1/5
	8P			**590.EL4008** [1]	1/5	**590.GE4008** [1]	1/5

[1] With late break and early make neutral pole

- Handle padlockable in OFF (3 padlocks) and ON (1 padlock) position
- Equipped with door interlock
- Break-through cable entries

Enclosed switch disconnectors >> Surface mounting - Thermoplastic version [16A÷40A] EM

				ISOLATORS Series
				590.
				For emergency
				SWITCH DISCONNECTOR
				IP65
				EMERGENCY
Current	**Poles**	**Switch size**	**Dimension**	
16A	6P	Y3	155x210x107mm	**590.EM1606** 1/5
	8P			**590.EM1608** [1] 1/5
20A	2P	Y1	105x150x82mm	**590.EM2012** 1/12
	3P			**590.EM2013** 1/12
	4P			**590.EM2014** 1/12
	3P+N			**590.EM2015** [1] 1/12
25A	6P	Y3	155x210x107mm	**590.EM2506** 1/5
	8P			**590.EM2508** [1] 1/5
32A	2P	Y1	105x150x82mm	**590.EM3212** 1/12
	3P			**590.EM3213** 1/12
	4P			**590.EM3214** 1/12
	3P+N			**590.EM3215** [1] 1/12
	6P	Y3	155x210x107mm	**590.EM3206** 1/5
	8P			**590.EM3208** [1] 1/5
40A	2P	Y1	105x150x82mm	**590.EM4012** 1/12
	3P			**590.EM4013** 1/12
	4P			**590.EM4014** 1/12
	3P+N			**590.EM4015** [1] 1/12
	6P	Y3	155x210x107mm	**590.EM4006** 1/5
	8P			**590.EM4008** [1] 1/5

[1] With late break and early make neutral pole

- Handle padlockable in OFF only (3 padlocks)
- Equipped with door interlock
- Break-through cable entries

Enclosed switch disconnectors >> Surface mounting - Thermoplastic version [63A÷160A] GE

ISOLATORS Series

590.

For general use [SPECIAL]

For general use

				SWITCH DISCONNECTOR				
				IP65		IP55	IP65	
				GENERAL				
Current	**Poles**	**Switch size**	**Dimension**					
63A	2P	Y2	155x210x107mm	**590.EL6302** [1]	1/5		**590.GE6302** [1]	1/5
	3P			**590.EL6303** [1]	1/5		**590.GE6303** [1]	1/5
	4P						**590.GE6304** [1]	1/5
	3P+N			**590.EL6305** [2] [1]	1/5		**590.GE6305** [2] [1]	1/5
	6P	Y4	228x308x128mm				**590.GE6306** [3]	1
	8P						**590.GE6308** [2] [3]	1
80A	2P	Y2	155x210x107mm	**590.EL8002** [1]	1/5		**590.GE8002** [1]	1/5
	3P			**590.EL8003** [1]	1/5		**590.GE8003** [1]	1/5
	4P						**590.GE8004** [1]	1/5
	3P+N			**590.EL8005** [2] [1]	1/5		**590.GE8005** [2] [1]	1/5
	6P	Y4	228x308x128mm				**590.GE8006** [3]	1
	8P						**590.GE8008** [2] [3]	1
100A	3P	Y2	155x210x107mm	**590.EL10003** [1]	1/5		**590.GE10003** [1]	1/5
	3P+N			**590.EL10005** [2] [1]	1/5		**590.GE10005** [2] [1]	1/5
	6P	Y4	228x308x128mm				**590.GE10006** [3]	1
	8P						**590.GE10008** [2] [3]	1
125A	3P	Y5				**590.GE12503** [3]	1	
	3P+N					**590.GE12505** [2] [3]	1	
	6P		308x388x128mm				**590.GE12506** [3]	1
	8P						**590.GE12508** [2] [3]	1
160A	3P					**590.GE16003** [3]	1	
	3P+N					**590.GE16005** [2] [3]	1	
	6P						**590.GE16006** [3]	1
	8P						**590.GE16008** [2] [3]	1

[1] Break-through cable entries
[2] With late break and early make neutral pole
[3] Blank sides
- Handle padlockable in OFF (3 padlocks) and ON (1 padlock) position
- Equipped with door interlock

Enclosed switch disconnectors >> Surface mounting - Thermoplastic version [63A÷160A] EM

ISOLATORS Series

590.

For emergency

Current	Poles	Switch size	Dimension	SWITCH DISCONNECTOR EMERGENCY IP55		IP65	
63A	2P	Y2	155x210x107mm			**590.EM6302** [1]	1/5
	3P					**590.EM6303** [1]	1/5
	4P					**590.EM6304** [1]	1/5
	3P+N					**590.EM6305** [2] [1]	1/5
	6P	Y4	228x308x128mm	**590.EM6306** [3]	1		
	8P			**590.EM6308** [2] [3]	1		
80A	2P	Y2	155x210x107mm			**590.EM8002** [1]	1/5
	3P					**590.EM8003** [1]	1/5
	4P					**590.EM8004** [1]	1/5
	3P+N					**590.EM8005** [2] [1]	1/5
	6P	Y4	228x308x128mm	**590.EM8006** [3]	1		
	8P			**590.EM8008** [2] [3]	1		
100A	3P	Y2	155x210x107mm			**590.EM10003** [1]	1/5
	3P+N					**590.EM10005** [2] [1]	1/5
	6P	Y4	228x308x128mm	**590.EM10006** [3]	1		
	8P			**590.EM10008** [2] [3]	1		
125A	3P	Y5		**590.EM12503** [3]	1		
	3P+N			**590.EM12505** [2] [3]	1		
	6P		308x388x128mm	**590.EM12506** [3]	1		
	8P			**590.EM12508** [2] [3]	1		
160A	3P			**590.EM16003** [3]	1		
	3P+N			**590.EM16005** [2] [3]	1		
	6P			**590.EM16006** [3]	1		
	8P			**590.EM16008** [2] [3]	1		

[1] Break-through cable entries
[2] With late break and early make neutral pole
[3] Blank sides
- Handle padlockable in OFF only (3 padlocks)
- Equipped with door interlock

Enclosed switch disconnectors >> Surface mounting - Thermoplastic version

			ISOLATORS Series	
			590.	
			For general use	
			SWITCH DISCONNECTOR	
			IP65	
			GENERAL	
Current	**Poles**	**Dimension**		
20A	1P	82x120x69mm	**590.GE2021**	1/12
32A			**590.GE3221**	1/12
40A			**590.GE4021**	1/12

- Single pole switch, not suitable to receive door-locking kit.
- Handle padlockable in OFF (3 padlocks) and ON (1 padlock) position
- Break-through cable entries
- Suitable to switch single phase motor loads or other inductive loads
- Integrated switch

Enclosed switch disconnectors >> Surface mounting [HD] - Engineering plastic version - Heavy Duty

ISOLATORS-HD Series

590.

For emergency

For general use

SWITCH DISCONNECTOR

IP66

Current	Poles	Switch size	Dimension	EMERGENCY		GENERAL	
20A	2P	Y1	226x306x115mm	**590.JEM2002**	1/12	**590.JGE2002**	1/12
	3P			**590.JEM2003**	1/12	**590.JGE2003**	1/12
	3P+N			**590.JEM2005** [1]	1/12	**590.JGE2005** [1]	1/12
32A	2P			**590.JEM3202**	1/12	**590.JGE3202**	1/12
	3P			**590.JEM3203**	1/12	**590.JGE3203**	1/12
	3P+N			**590.JEM3205** [1]	1/12	**590.JGE3205** [1]	1/12
40A	2P			**590.JEM4002**	1/12	**590.JGE4002**	1/12
	3P			**590.JEM4003**	1/12	**590.JGE4003**	1/12
	3P+N			**590.JEM4005** [1]	1/12	**590.JGE4005** [1]	1/12

[1] With late break and early make neutral pole

- Handle padlockable in OFF (3 padlocks) and ON (1 padlock) position
- Blank side with drilling point mark

HD
Heavy Duty

Enclosed switch disconnectors >> Surface mounting - Aluminium version [16A÷40A] GE

Current	Poles	Switch size	Dimension	ISOLATORS Series 590.			
				For general use [SPECIAL]		**For general use**	
				SWITCH DISCONNECTOR IP65 GENERAL			
16A	6P	Y3	150x210x107mm	**590.HEL1606**	1/5	**590.HGE1606**	1/5
	8P			**590.HEL1608** [1]	1/5	**590.HGE1608** [1]	1/5
20A	2P	Y1	105x150x82mm	**590.HEL2002**	1/12	**590.HGE2002**	1/12
	3P			**590.HEL2003**	1/12	**590.HGE2003**	1/12
	4P					**590.HGE2004**	1/12
	3P+N			**590.HEL2005** [1]	1/12	**590.HGE2005** [1]	1/12
25A	6P	Y3	150x210x107mm	**590.HEL2506**	1/5	**590.HGE2506**	1/5
	8P			**590.HEL2508** [1]	1/5	**590.HGE2508** [1]	1/5
32A	2P	Y1	105x150x82mm	**590.HEL3202**	1/12	**590.HGE3202**	1/12
	3P			**590.HEL3203**	1/12	**590.HGE3203**	1/12
	4P					**590.HGE3204**	1/12
	3P+N			**590.HEL3205** [1]	1/12	**590.HGE3205** [1]	1/12
	6P	Y3	150x210x107mm	**590.HEL3206**	1/5	**590.HGE3206**	1/5
	8P			**590.HEL3208** [1]	1/5	**590.HGE3208** [1]	1/5
40A	2P	Y1	105x150x82mm	**590.HEL4002**	1/12	**590.HGE4002**	1/12
	3P			**590.HEL4003**	1/12	**590.HGE4003**	1/12
	4P					**590.HGE4004**	1/12
	3P+N			**590.HEL4005** [1]	1/12	**590.HGE4005** [1]	1/12
	6P	Y3	150x210x107mm	**590.HEL4006**	1/5	**590.HGE4006**	1/5
	8P			**590.HEL4008** [1]	1/5	**590.HGE4008** [1]	1/5

[1] With late break and early make neutral pole

- Handle padlockable in OFF (3 padlocks) and ON (1 padlock) position
- Equipped with door interlock
- Open threaded cable entry with cap / cable sleeve

Enclosed switch disconnectors >> Surface mounting - Aluminium version [16A÷40A] EM

				ISOLATORS Series	
				590.	
				For emergency switching	
				SWITCH DISCONNECTOR	
				IP65	
				EMERGENCY	
Current	**Poles**	**Switch size**	**Dimension**		
16A	6P	Y3	150x210x107mm	**590.HEM1606**	1/5
	8P			**590.HEM1608** [1]	1/5
20A	2P	Y1	105x150x82mm	**590.HEM2002**	1/12
	3P			**590.HEM2003**	1/12
	4P			**590.HEM2004**	1/12
	3P+N			**590.HEM2005** [1]	1/12
25A	6P	Y3	150x210x107mm	**590.HEM2506**	1/5
	8P			**590.HEM2508** [1]	1/5
32A	2P	Y1	105x150x82mm	**590.HEM3202**	1/12
	3P			**590.HEM3203**	1/12
	4P			**590.HEM3204**	1/12
	3P+N			**590.HEM3205** [1]	1/12
	6P	Y3	150x210x107mm	**590.HEM3206**	1/5
	8P			**590.HEM3208** [1]	1/5
40A	2P	Y1	105x150x82mm	**590.HEM4002**	1/12
	3P			**590.HEM4003**	1/12
	4P			**590.HEM4004**	1/12
	3P+N			**590.HEM4005** [1]	1/12
	6P	Y3	150x210x107mm	**590.HEM4006**	1/5
	8P			**590.HEM4008** [1]	1/5

[1] With late break and early make neutral pole

- Handle padlockable in OFF only (3 padlocks)
- Equipped with door interlock
- Open threaded cable entry with cap / cable sleeve

Enclosed switch disconnectors >> Surface mounting - Aluminium version [63A÷160A] GE

				ISOLATORS Series			
				590.			
				For general use [SPECIAL]		For general use	
				SWITCH DISCONNECTOR			
				IP65			
				GENERAL			
Current	**Poles**	**Switch size**	**Dimension**				
63A	2P	Y2	150x210x107mm	**590.HEL6302** [1]	1/5	**590.HGE6302** [1]	1/5
	3P			**590.HEL6303** [1]	1/5	**590.HGE6303** [1]	1/5
	4P					**590.HGE6304** [1]	1/5
	3P+N			**590.HEL6305** [2] [1]	1/5	**590.HGE6305** [2] [1]	1/5
	6P	Y4	264x315x122mm			**590.HGE6306**	1
	8P					**590.HGE6308** [2]	1
80A	2P	Y2	150x210x107mm	**590.HEL8002** [1]	1/5	**590.HGE8002** [1]	1/5
	3P			**590.HEL8003** [1]	1/5	**590.HGE8003** [1]	1/5
	4P					**590.HGE8004** [1]	1/5
	3P+N			**590.HEL8005** [2] [1]	1/5	**590.HGE8005** [2] [1]	1/5
	6P	Y4	264x315x122mm			**590.HGE8006** [3]	1
	8P					**590.HGE8008** [2] [3]	1
100A	3P	Y2	150x210x107mm	**590.HEL10003** [3]	1/5	**590.HGE10003** [1]	1/5
	3P+N			**590.HEL10005** [2] [3]	1/5	**590.HGE10005** [2] [1]	1/5
	6P	Y4	264x315x122mm			**590.HGE10006** [3]	1
	8P					**590.HGE10008** [2] [3]	1
125A	3P	Y5	315x410x128mm			**590.HGE12503** [3]	1
	3P+N					**590.HGE12505** [2] [3]	1
	6P					**590.HGE12506** [3]	1
	8P					**590.HGE12508** [2] [3]	1
160A	3P					**590.HGE16003** [3]	1
	3P+N					**590.HGE16005** [2] [3]	1
	6P					**590.HGE16006** [3]	1
	8P					**590.HGE16008** [2] [3]	1

[1] Open threaded cable entry with cap / cable sleeve
[2] With late break and early make neutral pole
[3] Blank sides
- Handle padlockable in OFF (3 padlocks) and ON (1 padlock) position
- Equipped with door interlock

Enclosed switch disconnectors >> Surface mounting - Aluminium version [63A÷160A] EM

				ISOLATORS Series	
				590.	
				For emergency switching	
				SWITCH DISCONNECTOR	
				IP65	
				EMERGENCY	
Current	**Poles**	**Switch size**	**Dimension**		
63A	2P	Y2	150x210x107mm	**590.HEM6302** [1]	1/5
	3P			**590.HEM6303** [1]	1/5
	4P			**590.HEM6304** [1]	1/5
	3P+N			**590.HEM6305** [2] [1]	1/5
	6P	Y4	264x315x122mm	**590.HEM6306** [3]	1
	8P			**590.HEM6308** [2] [3]	1
80A	2P	Y2	150x210x107mm	**590.HEM8002** [1]	1/5
	3P			**590.HEM8003** [1]	1/5
	4P			**590.HEM8004** [1]	1/5
	3P+N			**590.HEM8005** [2] [1]	1/5
	6P	Y4	264x315x122mm	**590.HEM8006** [3]	1
	8P			**590.HEM8008** [2] [3]	1
100A	3P	Y2	150x210x107mm	**590.HEM10003** [1]	1/5
	3P+N			**590.HEM10005** [2] [1]	1/5
	6P	Y4	264x315x122mm	**590.HEM10006** [3]	1
	8P			**590.HEM10008** [2] [3]	1
125A	3P	Y5		**590.HEM12503** [3]	1
	3P+N			**590.HEM12505** [2] [3]	1
	6P			**590.HEM12506** [3]	1
	8P			**590.HEM12508** [2] [3]	1
160A	3P		315x410x128mm	**590.HEM16003** [3]	1
	3P+N			**590.HEM16005** [2] [3]	1
	6P			**590.HEM16006** [3]	1
	8P			**590.HEM16008** [2] [3]	1

[1] Open threaded cable entry with cap / cable sleeve
[2] With late break and early make neutral pole
[3] Blank sides
- Handle padlockable in OFF only (3 padlocks)
- Equipped with door interlock

Enclosed switch disconnectors >> Surface mounting - Aluminium version [100A÷160A] - High wiring capacity terminals

				ISOLATORS Series			
				590.			
				For emergency switching		For general use	
				SWITCH DISCONNECTOR			
				IP65			
				EMERGENCY		GENERAL	
Current	Poles	Switch size	Dimension				
100A	3P	K1	264x315x112mm	**590.HEM10003.W** 5 2	1	**590.HGE10003.W** 1 2	1
	3P+N			**590.HEM10005.W** 5 3 2	1	**590.HGE10005.W** 1 3 2	1
125A	3P		315x410x150mm	**590.HEM12503.W** 5 4	1	**590.HGE12503.W** 1 4	1
	3P+N			**590.HEM12505.W** 5 3 4	1	**590.HGE12505.W** 1 3 4	1
160A	3P	K2		**590.HEM16003.W** 5 4	1	**590.HGE16003.W** 1 4	1
	3P+N			**590.HEM16005.W** 5 3 4	1	**590.HGE16005.W** 1 3 4	1

1 Handle padlockable in OFF (3 padlocks) and ON (1 padlock) position
2 Open threaded cable entry with cap / cable sleeve
3 With late break and early make neutral pole
4 Blank sides
5 Handle padlockable in OFF only (3 padlocks)
- Switch and enclosure increased dimensions

Enclosed switch disconnectors >> Surface mounting - Stainless steel version

				ISOLATORS Series			
				590.			
				For emergency switching		For general use	
				SWITCH DISCONNECTOR			
				IP65			
				EMERGENCY		GENERAL	
Current	**Poles**	**Switch size**	**Dimension**				
16A	6P	Y3	226x306x115mm	**590.SEM1606**	1/12	**590.SGE1606**	1/12
20A	2P	Y1	125x165x90mm	**590.SEM2002**	1/12	**590.SGE2002**	1/12
	3P			**590.SEM2003**	1/12	**590.SGE2003**	1/12
	3P+N			**590.SEM2005** [1]	1	**590.SGE2005** [1]	1/12
25A	6P	Y3	226x306x115mm	**590.SEM2506**	1/12	**590.SGE2506**	1/12
32A	2P	Y1	125x165x90mm	**590.SEM3202**	1/12	**590.SGE3202**	1/12
	3P			**590.SEM3203**	1/12	**590.SGE3203**	1/12
	3P+N			**590.SEM3205** [1]	1	**590.SGE3205** [1]	1
	6P	Y3	226x306x115mm	**590.SEM3206**	1/12	**590.SGE3206**	1/12
40A	2P	Y1	125x165x90mm	**590.SEM4002**	1/12	**590.SGE4002**	1/12
	3P			**590.SEM4003**	1/12	**590.SGE4003**	1
	3P+N			**590.SEM4005** [1]	1/12	**590.SGE4005** [1]	1/12
	6P	Y3	226x306x115mm	**590.SEM4006**	1/12	**590.SGE4006**	1
63A	3P	Y4	176x226x90mm	**590.SEM6303**	1/5	**590.SGE6303**	1
	3P+N			**590.SEM6305** [1]	1/5	**590.SGE6305** [1]	1
	6P		226x306x115mm	**590.SEM6306**	1/5	**590.SGE6306**	1/5
80A	3P		176x226x90mm	**590.SEM8003**	1/5	**590.SGE8003**	1/5
	3P+N			**590.SEM8005** [1]	1/5	**590.SGE8005** [1]	1/5
	6P		226x306x115mm	**590.SEM8006**	1/5	**590.SGE8006**	1/5
100A	3P		176x226x90mm	**590.SEM10003**	1/5	**590.SGE10003**	1/5
	3P+N			**590.SEM10005** [1]	1/5	**590.SGE10005** [1]	1/5
	6P		226x306x115mm	**590.SEM10006**	1/5	**590.SGE10006**	1
125A	3P	Y5	312x412x115mm	**590.SEM12503**	1/5	**590.SGE12503**	1/5
	3P+N			**590.SEM12505** [1]	1/5	**590.SGE12505** [1]	1/5
	6P			**590.SEM12506**	1/5	**590.SGE12506**	1/5
160A	3P			**590.SEM16003**	1	**590.SGE16003**	1
	3P+N			**590.SEM16005** [1]	1	**590.SGE16005** [1]	1
	6P			**590.SEM16006**	1	**590.SGE16006**	1

[1] With late break and early make neutral pole

- Handle padlockable in OFF only (3 padlocks)
- Equipped with door interlock
- Blank sides

Enclosed switch disconnectors >> Surface mounting - Metal version (HR) - High Rating

ISOLATORS Series

590.

Current	Poles	Switch size	Dimension	For general use [TOP/BOTTOM]		For emergency switching [TOP/BOTTOM]	
				SWITCH DISCONNECTOR IP65			
				GENERAL		EMERGENCY	
160A	3P	K2	500x300x150mm	**590.KGE16003** [1]	1	**590.KEM16003** [1]	1
	3P+N			**590.KGE16005** [2] [1]	1	**590.KEM16005** [2] [1]	1
200A	3P		300x500x150mm	**590.KGE20003** [1]	1	**590.KEM20003** [1]	1
	3P+N			**590.KGE20005** [2] [1]	1	**590.KEM20005** [2] [1]	1
250A	3P			**590.KGE25003** [1]	1	**590.KEM25003** [1]	1
	3P+N			**590.KGE25005** [2] [1]	1	**590.KEM25005** [2] [1]	1
315A	3P	K3	400x600x200mm	**590.KGE31503** [1]	1	**590.KEM31503** [1]	1
	3P+N			**590.KGE31505** [2] [1]	1	**590.KEM31505** [2] [1]	1
400A	3P			**590.KGE40003** [1]	1	**590.KEM40003** [1]	1
	3P+N			**590.KGE40005** [2] [1]	1	**590.KEM40005** [2] [1]	1
500A	3P			**590.KGE50003** [1]	1	**590.KEM50003** [1]	1
	3P+N			**590.KGE50005** [2] [1]	1	**590.KEM50005** [2] [1]	1
630A	3P	K4		**590.KGE63003** [1]	1	**590.KEM63003** [1]	1
	3P+N			**590.KGE63005** [2] [1]	1	**590.KEM63005** [2] [1]	1
800A	3P	K5	500x700x250mm	**590.KGE80003** [1]	1	**590.KEM80003** [1]	1
	3P+N			**590.KGE80005** [2] [1]	1	**590.KEM80005** [2] [1]	1
1000A	3P			**590.KGE100003** [1]	1	**590.KEM100003** [1]	1
	3P+N			**590.KGE100005** [2] [1]	1	**590.KEM100005** [2] [1]	1
1250A	3P			**590.KGE125003** [1]	1	**590.KEM125003** [1]	1
	3P+N			**590.KGE125005** [2] [1]	1	**590.KEM125005** [2] [1]	1
1600A	3P	K6	600x1000x300mm	**590.KGE160003** [3]	1	**590.KEM160003** [3]	1
	3P+N			**590.KGE160005** [2] [3]	1	**590.KEM160005** [2] [3]	1

[1] Full current neutral pole up to 1250A
[2] With late break and early make neutral pole
[3] Neutral pole 1250A. Full current neutral pole on request.

- Handle padlockable in OFF only (3 padlocks)
- TOP/BOTTOM = Top/Bottom connection
- Equipped with door interlock
- Gland plate cable entry

Enclosed switch disconnectors >> Surface mounting - Metal version (HR) - High Rating

				ISOLATORS Series	
				590.	
				For general use [BOTTOM/BOTTOM]	
				SWITCH DISCONNECTOR	
				IP65	
				GENERAL	
Current	**Poles**	**Switch size**	**Dimension**		
160A	3P	K2	500x300x150mm	**590.KGE16003B** [1]	1
	3P+N			**590.KGE16005B** [2] [1]	1
200A	3P		300x500x150mm	**590.KGE20003B** [1]	1
	3P+N			**590.KGE20005B** [2] [1]	1
250A	3P			**590.KGE25003B** [1]	1
	3P+N			**590.KGE25005B** [2] [1]	1
315A	3P	K3	400x600x200mm	**590.KGE31503B** [1]	1
	3P+N			**590.KGE31505B** [2] [1]	1
400A	3P			**590.KGE40003B** [1]	1
	3P+N			**590.KGE40005B** [2] [1]	1
500A	3P		500x700x250mm	**590.KGE50003B** [1]	1
	3P+N			**590.KGE50005B** [2] [1]	1
630A	3P	K4	800x800x300mm	**590.KGE63003B** [1]	1
	3P+N			**590.KGE63005B** [2] [1]	1
800A	3P	K5		**590.KGE80003B** [1]	1
	3P+N			**590.KGE80005B** [2] [1]	1
1000A	3P		1000x1000x300mm	**590.KGE100003B** [1]	1
	3P+N			**590.KGE100005B** [2] [1]	
1250A	3P			**590.KGE125003B** [1]	1
	3P+N			**590.KGE125005B** [2] [1]	
1600A	3P	K6		**590.KGE160003B** [3]	1
	3P+N			**590.KGE160005B** [2] [3]	

[1] Full current neutral pole up to 1250A
[2] With late break and early make neutral pole
[3] Neutral pole 1250A. Full current neutral pole on request.

- Handle padlockable in OFF only (3 padlocks)
- BOTTOM/BOTTOM = Bottom/Bottom connection with busbar
- Equipped with door interlock
- Gland plate cable entry

Enclosed switch disconnectors >> Surface mounting - Thermoplastic version [DC]

ISOLATORS Series

590.

For general use [DC]

					SWITCH DISCONNECTOR			
					IP55		IP65	
					GENERAL			
Current	**Poles**	**Poles in series**	**Switch size**	**Dimension**				
15A	DC	3	Y1	105x150x127mm			**590.DCGE0815** [1][2]	1/10
16A		4	Y3	105x150x98mm			**590.DCGE0416** [1][2]	1/12
20A		5		105x150x127mm			**590.DCGE0820** [1][2]	1/10
25A		6		155x210x122mm			**590.DCGE0825** [1][2]	1/5
30A		8					**590.DCGE0830** [1][2]	1/5
40A			Y5	228x308x173mm	**590.DCGE0840** [3][4]	1		

[1] Handle padlockable in OFF (3 padlocks) and ON (1 padlock) position
[2] Break-through cable entries
[3] Handle padlockable in OFF only (3 padlocks)
[4] Blank sides
- Equipped with door interlock

Enclosed switch disconnector [FUSES] >> Surface mounting - Thermoplastic version

					ISOLATORS Series		
					590.		
					For emergency	**For general use**	
					SWITCH DISCONNECTOR		
					IP55		
					EMERGENCY	GENERAL	
Current	**Poles**	**Switch size**	**Fuse type**	**Dimension**			
16A	2P	F1	gG 10,3x38mm	190x240x125mm	**590.EMF1602**	**590.GEF1602**	
	3P				**590.EMF1603**	**590.GEF1603**	
	4P				**590.EMF1604**	**590.GEF1604**	
	3P+N				**590.EMF1605** [1]	**590.GEF1605** [1]	
32A	2P				**590.EMF3202**	**590.GEF3202**	
	3P				**590.EMF3203**	**590.GEF3203**	
	4P				**590.EMF3204**	**590.GEF3204**	
	3P+N				**590.EMF3205** [1]	**590.GEF3205** [1]	1
63A	3P	KF1	DIN-HN	300x380x170mm	**590.EMD6303**	**590.GED6303**	
			BS		**590.EMB6303**	**590.GEB6303**	
	3P+N		DIN-HN		**590.EMD6305** [1]	**590.GED6305** [1]	
			BS		**590.EMB6305** [1]	**590.GEB6305** [1]	
80A	3P		DIN-HN		**590.EMD8003**	**590.GED8003**	
			BS		**590.EMB8003**	**590.GEB8003**	
	3P+N		DIN-HN		**590.EMD8005** [1]	**590.GED8005** [1]	1
			BS		**590.EMB8005** [1]	**590.GEB8005** [1]	
100A	3P	KF2	DIN-HN	370x450x180mm	**590.EMD10003**	**590.GED10003**	
			BS		**590.EMB10003**	**590.GEB10003**	
	3P+N		DIN-HN		**590.EMD10005** [1]	**590.GED10005** [1]	
			BS		**590.EMB10005** [1]	**590.GEB10005** [1]	
125A	3P		DIN-HN		**590.EMD12503**	**590.GED12503**	
			BS		**590.EMB12503**	**590.GEB12503**	
	3P+N		DIN-HN		**590.EMD12505** [1]	**590.GED12505** [1]	
			BS		**590.EMB12505** [1]	**590.GEB12505** [1]	
160A	3P		DIN-HN		**590.EMD16003**	**590.GED16003**	
			BS		**590.EMB16003**	**590.GEB16003**	
	3P+N		DIN-HN		**590.EMD16005** [1]	**590.GED16005** [1]	1
			BS		**590.EMB16005** [1]	**590.GEB16005** [1]	

[1] With late break and early make neutral pole

- Handle padlockable in OFF only (3 padlocks)
- Equipped with door interlock
- Blank sides

Enclosed switch disconnector [FUSES] >> Surface mounting - Aluminium version

Current	Poles	Switch size	Fuse type	Dimension	ISOLATORS Series 590. EMERGENCY	GENERAL	
					For emergency switching	For general use	
					SWITCH DISCONNECTOR IP65		
					EMERGENCY	GENERAL	
16A	2P	F1	gG 10,3x38mm	217x253x93mm	**590.HEMF1602**	**590.HGEF1602**	
	3P				**590.HEMF1603**	**590.HGEF1603**	
	4P				**590.HEMF1604**	**590.HGEF1604**	
	3P+N				**590.HEMF1605** [1]	**590.HGEF1605** [1]	
32A	2P				**590.HEMF3202**	**590.HGEF3202**	
	3P				**590.HEMF3203**	**590.HGEF3203**	
	4P				**590.HEMF3204**	**590.HGEF3204**	
	3P+N				**590.HEMF3205** [1]	**590.HGEF3205** [1]	1
63A	3P	KF1	DIN-HN	315x410x128mm	**590.HEMD6303**	**590.HGED6303**	
			BS		**590.HEMB6303**	**590.HGEB6303**	
	3P+N		DIN-HN		**590.HEMD6305** [1]	**590.HGED6305** [1]	
			BS		**590.HEMB6305** [1]	**590.HGEB6305** [1]	
80A	3P		DIN-HN		**590.HEMD8003**	**590.HGED8003**	
			BS		**590.HEMB8003**	**590.HGEB8003**	
	3P+N		DIN-HN		**590.HEMD8005** [1]	**590.HGED8005** [1]	1
			BS		**590.HEMB8005** [1]	**590.HGEB8005** [1]	

[1] With late break and early make neutral pole

- Handle padlockable in OFF only (3 padlocks)
- Equipped with door interlock
- Blank sides

Enclosed switch disconnector [FUSES] >> Surface mounting - Metal version (HR) - High Rating [Fuse DIN-NH]

					ISOLATORS Series	
					590.	
					For general use [TOP/BOTTOM]	For emergency switching [TOP/BOTTOM]
					SWITCH DISCONNECTOR	
					IP65	
					GENERAL	EMERGENCY
Current	**Poles**	**Switch size**	**Fuse type**	**Dimension**		
100A	3P	KF2	DIN-HN	300x500x200mm	**590.KGED10003**	**590.KEMD10003**
	3P+N				**590.KGED10005** [1]	**590.KEMD10005** [1]
125A	3P				**590.KGED12503**	**590.KEMD12503**
	3P+N				**590.KGED12505** [1]	**590.KEMD12505** [1]
160A	3P				**590.KGED16003**	**590.KEMD16003**
	3P+N				**590.KGED16005** [1] 1	**590.KEMD16005** [1]
200A	3P	KF3		400x600x200mm	**590.KGED20003**	**590.KEMD20003**
	3P+N				**590.KGED20005** [1]	**590.KEMD20005** [1]
250A	3P				**590.KGED25003**	**590.KEMD25003**
	3P+N				**590.KGED25005** [1] 1	**590.KEMD25005** [1]
315A	3P	KF4		500x700x250mm	**590.KGED31503**	**590.KEMD31503**
	3P+N				**590.KGED31505** [1]	**590.KEMD31505** [1]
400A	3P				**590.KGED40003**	**590.KEMD40003**
	3P+N				**590.KGED40005** [1] 1	**590.KEMD40005** [1]
630A	3P	KF5		600x800x300mm	**590.KGED63003**	**590.KEMD63003**
	3P+N				**590.KGED63005** [1] 1	**590.KEMD63005** [1]

[1] With late break and early make neutral pole

- Handle padlockable in OFF only (3 padlocks)
- TOP/BOTTOM = Top/Bottom connection
- Equipped with door interlock
- Gland plate cable entry

Enclosed switch disconnector [FUSES] >> Surface mounting - Metal version (HR) - High Rating [Fuse BS]

					ISOLATORS Series	
					590.	
					For general use [TOP/ BOTTOM]	For emergency switching [TOP/BOTTOM]
					SWITCH DISCONNECTOR	
					IP65	
					GENERAL	EMERGENCY
Current	**Poles**	**Switch size**	**Fuse type**	**Dimension**		
100A	3P	KF2	BS	300x500x200mm	**590.KGEB10003**	**590.KEMB10003**
	3P+N				**590.KGEB10005** [1]	**590.KEMB10005** [1]
125A	3P				**590.KGEB12503**	**590.KEMB12503**
	3P+N				**590.KGEB12505** [1]	**590.KEMB12505** [1]
160A	3P				**590.KGEB16003**	**590.KEMB16003**
	3P+N				**590.KGEB16005** [1]	**590.KEMB16005** [1]
200A	3P	KF3		400x600x200mm	**590.KGEB20003**	**590.KEMB20003**
	3P+N				**590.KGEB20005** [1]	**590.KEMB20005** [1]
250A	3P				**590.KGEB25003**	**590.KEMB25003**
	3P+N				**590.KGEB25005** [1]	**590.KEMB25005** [1]
315A	3P	KF4		500x700x250mm	**590.KGEB31503**	**590.KEMB31503**
	3P+N				**590.KGEB31505** [1]	**590.KEMB31505** [1]
400A	3P				**590.KGEB40003**	**590.KEMB40003**
	3P+N				**590.KGEB40005** [1]	**590.KEMB40005** [1]
630A	3P	KF5		600x800x300mm	**590.KGEB63003**	**590.KEMB63003**
	3P+N				**590.KGEB63005** [1]	**590.KEMB63005** [1]

[1] With late break and early make neutral pole

- Handle padlockable in OFF only (3 padlocks)
- TOP/BOTTOM = Top/Bottom connection
- Equipped with door interlock
- Gland plate cable entry

Enclosed switch disconnector [FUSES] >> Surface mounting - Metal version (HR) - High Rating

					ISOLATORS Series
					590.
					For general use [BOTTOM/BOTTOM]
					SWITCH DISCONNECTOR
					IP65
					GENERAL
Current	**Poles**	**Switch size**	**Fuse type**	**Dimension**	
100A	3P	KF1	DIN-HN	300x500x200mm	**590.KGED10003B**
			BS		**590.KGEB10003B**
	3P+N		DIN-HN		**590.KGED10005B** [1]
			BS		**590.KGEB10005B** [1]
125A	3P		DIN-HN		**590.KGED12503B**
			BS		**590.KGEB12503B**
	3P+N		DIN-HN		**590.KGED12505B** [1]
			BS		**590.KGEB12505B** [1]
160A	3P		DIN-HN		**590.KGED16003B**
			BS		**590.KGEB16003B**
	3P+N		DIN-HN		**590.KGED16005B** [1] 1
			BS		**590.KGEB16005B** [1]
200A	3P	KF2	DIN-HN	400x600x250mm	**590.KGED20003B**
			BS		**590.KGEB20003B**
	3P+N		DIN-HN		**590.KGED20005B** [1]
			BS		**590.KGEB20005B** [1]
250A	3P		DIN-HN		**590.KGED25003B**
			BS		**590.KGEB25003B**
	3P+N		DIN-HN		**590.KGED25005B** [1] 1
			BS		**590.KGEB25005B** [1]

[1] With late break and early make neutral pole

- Handle padlockable in OFF only (3 padlocks)
- BOTTOM/BOTTOM = Bottom/Bottom connection with busbar
- Equipped with door interlock
- Gland plate cable entry

I-O-II
Change-Over Switches [I-O-II]

Enclosed change-over switch disconnectors >> Surface mounting - Thermoplastic version

ISOLATORS Series

590.

For general use [I-O-II]

Current	Poles	Switch size	Dimension	ENCLOSED CHANGE OVER SWITCH IP55 GENERAL		ENCLOSED CHANGE OVER SWITCH IP65 GENERAL	
16A	3P	C1	155x210x107mm			**590.GE1603-C** 5 6	1/5
	3P+N					**590.GE1605-C** 5 4 6	1/5
25A	3P					**590.GE2503-C** 5 6	1/5
	3P+N					**590.GE2505-C** 5 4 6	1/5
32A	3P					**590.GE3203-C** 5 6	1/5
	3P+N					**590.GE3205-C** 5 4 6	1/5
40A	3P					**590.GE4003-C** 5 6	1/5
	3P+N					**590.GE4005-C** 5 4 6	1/5
63A	3P	C2	228x308x128mm	**590.GE6303-C** 1 2 3	1		
	3P+N			**590.GE6305-C** 1 2 4 3	1		
80A	3P			**590.GE8003-C** 1 2 3	1		
	3P+N			**590.GE8005-C** 1 2 4 3	1		
100A	3P			**590.GE10003-C** 1 2 3	1		
	3P+N			**590.GE10005-C** 1 2 4 3	1		
125A	3P	C3	308x388x128mm	**590.GE12503-C** 1 2 3	1		
	3P+N			**590.GE12505-C** 1 2 4 3	1		
160A	3P			**590.GE16003-C** 1 2 3	1		
	3P+N			**590.GE16005-C** 1 2 4 3	1		

1 Handle padlockable in OFF only (3 padlocks)
2 Equipped with door interlock
3 Blank sides
4 With late break and early make neutral pole
5 Handle padlockable in OFF (3 padlocks) and ON (1 padlock) position
6 Break-through cable entries

Enclosed change-over switch disconnectors >> Surface mounting - Aluminium version

Current	Poles	Switch size	Dimension	ISOLATORS Series 590.	
				For general use [I-O-II]	
				ENCLOSED CHANGE OVER SWITCH	
				IP65	
				GENERAL	
16A	3P	C1	150x210x107mm	**590.HGE1603-C** 5 6	1/5
	3P+N			**590.HGE1605-C** 5 4 6	1/5
25A	3P			**590.HGE2503-C** 5 6	1/5
	3P+N			**590.HGE2505-C** 5 4 6	1/5
32A	3P			**590.HGE3203-C** 5 6	1/5
	3P+N			**590.HGE3205-C** 5 4 6	1/5
40A	3P			**590.HGE4003-C** 5 6	1/5
	3P+N			**590.HGE4005-C** 5 4 6	1/5
63A	3P	C2	264x315x122mm	**590.HGE6303-C** 1 2 3	1
	3P+N			**590.HGE6305-C** 1 2 4 3	1
80A	3P			**590.HGE8003-C** 1 2 3	1
	3P+N			**590.HGE8005-C** 1 2 4 3	1
100A	3P			**590.HGE10003-C** 1 2 3	1
	3P+N			**590.HGE10005-C** 1 2 4 3	1
125A	3P	C3	315x410x128mm	**590.HGE12503-C** 1 2 3	1
	3P+N			**590.HGE12505-C** 1 2 4 3	1
160A	3P			**590.HGE16003-C** 1 2 3	1
	3P+N			**590.HGE16005-C** 1 2 4 3	1

1 Handle padlockable in OFF only (3 padlocks)
2 Equipped with door interlock
3 Blank sides
4 With late break and early make neutral pole
5 Handle padlockable in OFF (3 padlocks) and ON (1 padlock) position
6 Open threaded cable entry with cap / cable sleeve

I-O-II
Change-Over Switches [I-O-II]

Enclosed change-over switch disconnectors >> Surface mounting - Stainless steel version

Current	Poles	Switch size	Dimension	ISOLATORS Series 590.	
				For general use [I-O-II]	
				ENCLOSED CHANGE OVER SWITCH	
				IP65	
				GENERAL	
16A	3P	C1	226x306x115mm	**590.SGE1603-C**	1/12
	3P+N			**590.SGE1605-C** [1]	1/12
25A	3P			**590.SGE2503-C**	1/12
	3P+N			**590.SGE2505-C** [1]	1/12
32A	3P			**590.SGE3203-C**	1/12
	3P+N			**590.SGE3205-C** [1]	1/12
40A	3P			**590.SGE4003-C**	1/12
	3P+N			**590.SGE4005-C** [1]	1/12
63A	3P	C2		**590.SGE6303-C**	1/12
	3P+N			**590.SGE6305-C** [1]	1/12
80A	3P			**590.SGE8003-C**	1/12
	3P+N			**590.SGE8005-C** [1]	1/12
100A	3P			**590.SGE10003-C**	1/12
	3P+N			**590.SGE10005-C** [1]	1/12
125A	3P	C3	312x412x115mm	**590.SGE12503-C**	1/12
	3P+N			**590.SGE12505-C** [1]	1/12
160A	3P			**590.SGE16003-C**	1/12
	3P+N			**590.SGE16005-C** [1]	1/12

[1] With late break and early make neutral pole

- Handle padlockable in OFF only (3 padlocks)
- Equipped with door interlock
- Blank sides

Switch-disconnectors IP65

Description	Switch size	Suitable for	ISOLATORS Series 590. Accessoires: dook-locking	
DOOR-LOCKING KIT	Y1	THERMOPLASTIC ENCLOSURES	**590.BK040**	12
		ALUMINIUM ENCLOSURES	**590.BK040H**	12
	Y2	THERMOPLASTIC ENCLOSURES	**590.BK080**	5
		ALUMINIUM ENCLOSURES	**590.BK080H**	5

Description	Colour	Switch size	TOP22 Series 590. Contact blocks	
NC CONTACT		Y1	**590.PL004001** [1]	10/60
		Y2	**590.PL004003** [1]	10
NO CONTACT		Y1	**590.PL004002** [2]	10/60
		Y2	**590.PL004004** [2]	10

[1] NC=Normally closed
[2] NO=Normally open
- Snap catch

Switch-disconnectors IP65

			TOP22 Series 590.	
Description	**Switch size**	**Notes**	**Contact blocks**	
CHANGE OVER CONTACT	Y3 Y4 Y5 C1 C2 C3	15A 250V~ - 10A 415V~	**590.PL005**	50

- Break before main contacts

		TOP22 Series 590.	
Description	**Switch size**	**Contact blocks**	
AUXILIARY CONTACT 1NA+1NC	KF1 KF2 K2	**590.PL006011**	10
	KF3 KF5 K3 K5 K6	**590.PL006012**	10
	KF4 K4	**590.PL006013**	10
AUXILIARY CONTACT 2NA+2NC	KF1 KF2 K2	**590.PL006021**	10
	KF3 KF5 K3 K5 K6	**590.PL006022**	10
	KF4 K4	**590.PL006023**	10

- Break before main contacts

Switch-disconnectors IP65

			COMMAND Series	
			590.	
Description	**Switch size**	**Suitable for**	**Terminal protection cover**	
TERMINAL PROTECTION COVER	KF1	TOP TERMINALS	**590.KMT11**	10
		BOTTOM TERMINALS	**590.KMT12**	10
	KF2 K2	TOP TERMINALS	**590.KMT21**	10
		BOTTOM TERMINALS	**590.KMT22**	10
	KF3 K3	TOP TERMINALS	**590.KMT31**	10
		BOTTOM TERMINALS	**590.KMT32**	10
	KF4 K4	TOP TERMINALS	**590.KMT41**	10
		BOTTOM TERMINALS	**590.KMT42**	10
	KF5 K5	TOP TERMINALS	**590.KMT51**	10
		BOTTOM TERMINALS	**590.KMT52**	10

Auxiliary control equipments >> Push buttons

			TOP22 Series 590.	
Description	**Version**	**Colour**	**Push buttons - Flush button**	
PUSH BUTTON	FLUSH		**590.PPRN5**	1/10
			590.PPRN8	1/10
			590.PPRN1	1/10
			590.PPRN2	1/10

- Fixing by metal ring nut-hole diameter 22mm.
- Clamping of the baseplate to the equipment by swing lever.
- Provided with contact carrier base plate.

			TOP22 Series 590.	
Description	**Version**	**Colour**	**Push buttons - Protruding button**	
PUSH BUTTON	PROTRUDING		**590.PPSN8**	1/10
			590.PPSN1	1/10

Auxiliary control equipments >> Push buttons

			TOP22 Series 590.	
Description	**Version**	**Colour**	**Push buttons - Illuminated flush button**	
PUSH BUTTON	ILLUMINATED FLUSH		**590.PPRL5**	1/10
			590.PPRL2	1/10

- Fixing by metal ring nut-hole diameter 22mm.
- Clamping of the baseplate to the equipment by swing lever.
- Provided with contact carrier base plate.

				TOP22 Series 590.	
Description	**Version**	**Colour**	**Ø**	**Mushroom-head emergency push buttons**	
EMERGENCY PUSH BUTTON	RELEASE BY ROTATION		ø40mm	**590.PPFN1R4N**	1/10
			ø60mm	**590.PPFN1R6N**	1/10
	RELEASE BY KEY		ø40mm	**590.PPFN1C4N**	1/10
	WITHOUT LOCKING			**590.PPFN1M4N**	1/10

- According to EN60418

Auxiliary control equipments >> Selectors

			TOP22 Series			
			590.			
Description	**Version**	**Colour**	**Selectors - Key selectors**		**Selectors - Lever selectors**	
LEVER SELECTOR	2 PULSE POSITIONS	■			**590.PSLN8D2**	1/10
	2 STEADY POSITIONS				**590.PSLN8D0**	1/10
	3 PULSE POSITIONS				**590.PSLN8T3**	1/10
	3 STEADY POSITIONS				**590.PSLN8T0**	1/10
KEY SELECTOR	2 STEADY POSITIONS		**590.PSCR8D0C** [1]	10		
	3 STEADY POSITIONS		**590.PSCR8T0C** [1]	10		

[1] Key drawing when on “zero” position

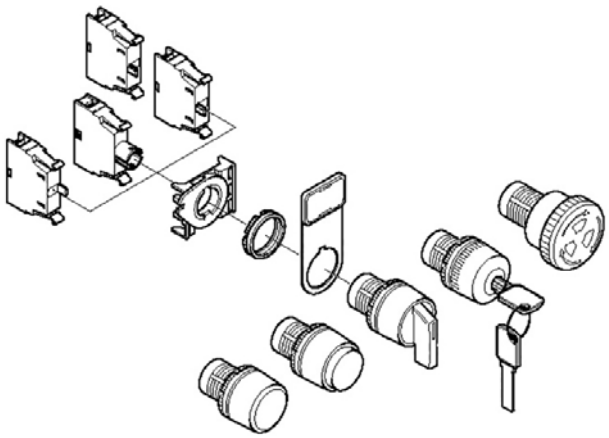

Auxiliary control equipments

				TOP22 Series 590.
Description	**Colour**	**Ø**	**Notes**	**Enbloc pilot lamps (LED 220V)**
PILOT LAMP		ø22mm	LED	**590.PLML5L220** 10
				590.PLML4L220 10
				590.PLML1L220 10
				590.PLML2L220 10
				590.PLML3L220 10

			TOP22 Series 590.
Description	**Colour**	**Switch size**	**Contact blocks**
LAMPHOLDER			**590.PL004007** [3] 10/60
NC CONTACT		Y1	**590.PL004001** [1] 10/60
NO CONTACT			**590.PL004002** [2] 10/60

[1] NC=Normally closed
[2] NO=Normally open
[3] Maximum direct power supply 250V with max 2W bulbs.
- Snap catch

Auxiliary control equipments

Description	TOP22 Series 590. Accessories	
PIN WRENCH	**590.PCF**	10

Description	Colour	TOP22 Series 590. Accessories	
LEGEND PLATE		**590.PPTN8**	10/100

Description	TOP22 Series 590. Accessories	
NEUTRAL LABEL	**590.PTA00**	10/100

Auxiliary control equipments

	TOP22 Series
	590.

Description	Colour	Notes	Accessories
EMERGENCY MARKER		ENG	**590.PTE/A** 10/100
		ITA	**590.PTE/I** 10/100

	TOP22 Series
	590.

Description	Colour	Ø	Accessories
CAP		ø22mm	**590.PTRN8** 10/100

	ENCLOSURES ACCESSORIES
	654.

Description	Flange	Suitable for	Colour	IP	Blank plates		
CUT-OUT PLATE	70x87mm	1 x TOP22		IP66		**654.0101Y** 25	
					654.0101 25		
		2 x TOP22					**654.0102** 25

- With gasket
- For components TOP22 Series.

Control stations

				TOP22 Series	
				590.	
Description	**IP**	**Colour**	**No. of places**	**Enclosures**	
ENCLOSURE	IP65		1 MOD.	**590.PR01K**	1/12
			2 MOD.	**590.PR02K**	1/10
			3 MOD.	**590.PR03K**	1/10
			4 MOD.	**590.PR04K**	
			6 MOD.	**590.PR06K**	

- Empty enclosures for auxiliary control equipment.

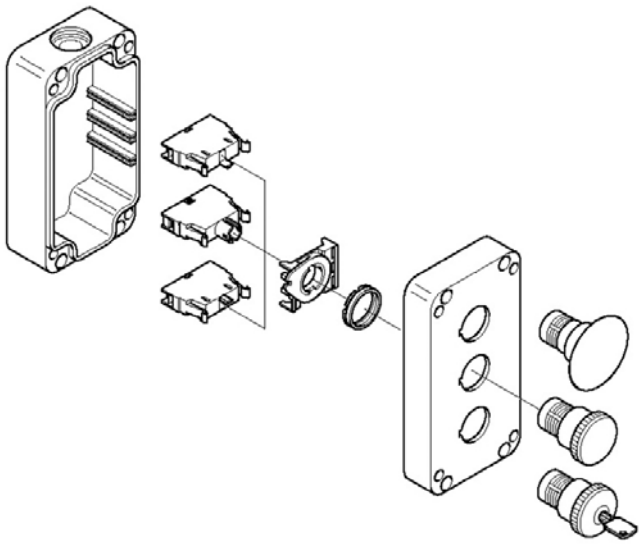

Control stations

TOP22 Series

590.

Complete push-button panel

	COMPLETE PUSH BUTTON PANEL		
	IP65		
No. of places			
1 MOD.	**590.PR01RN8** 1/12		
2 MOD.		**590.PR02A** 1/10	
3 MOD.			**590.PR03A** 1/10

- Enclosures complete with control and indicator lamp.

TOP22 Series

590.

Push-button panel [Ø60-90mm]

		COMPLETE PUSH BUTTON PANEL	EMERGENCY PUSH BUTTON	
			IP65	
			RELEASE BY ROTATION	UNSTABLE
No. of places	**Ø**			
1 MOD.	ø60mm		**590.PR01R6N** [1][2] 12	
	ø90mm	**590.PG8M9W10** [4][5] 12		**590.PG1M9W01** [1][2][3] 12

[1] Supplied with 1 NC contact block.
[2] Mushroom push-buttons for emergency stop
[3] Spring terminals
[4] Enclosures complete with control and indicator lamp.
[5] Supplied with 1 NO contact block.

Control stations

		TOP22 Series		
		590.		
		Emergency push-button panel		
		EMERGENCY PUSH BUTTON		
		IP65		
No. of places	**Notes**	RELEASE BY KEY	RELEASE BY ROTATION	
1 MOD.	VISUAL SIGNAL			**590.PR01R4S** 1/12
		590.PR01C4N 1/12	**590.PR01R4N** 1/12	

- Supplied with 1 NC contact block.
- Mushroom push-buttons for emergency stop

1.6

Empty enclosures

- DOMINO IP66 Series
  Consumer units and enclosures
- DOMINO IP40 Series
  Consumer units
- DOMINO System
  Distribution assemblies - IP66
- FLAT Series
  Enclosures
- BLOCK Series
  Distribution assemblies - IP66
- ENERBOX Series
  Distribution assemblies - IP55
- ADAPTO Series
  Adaptors for industrial applications
- MBOX Series
  Distribution assemblies for construction site
- EASYBOX Series
  Weather-proof enclosures - IP65
- KIOSK Series
  Distribution pedestals terminals for campsites, public areas and marinas
- GOMMA Series
  Rubber distribution assemblies
- EMERGENCY Series
  Emergency switchboards
- SCABOX Series
  Surface mounting junction boxes - Metal screws
- CUBIK Series
  Surface mounting junction boxes - ¼ turn plastic screw cover
- CUBOX Series
  Surface mounting junction boxes - ¼ turn plastic screw cover
- BEEBOX Series
  Enclosures
- WBOX Series
  Flush mounting boxes
- ALUBOX Series
  Aluminium junction boxes

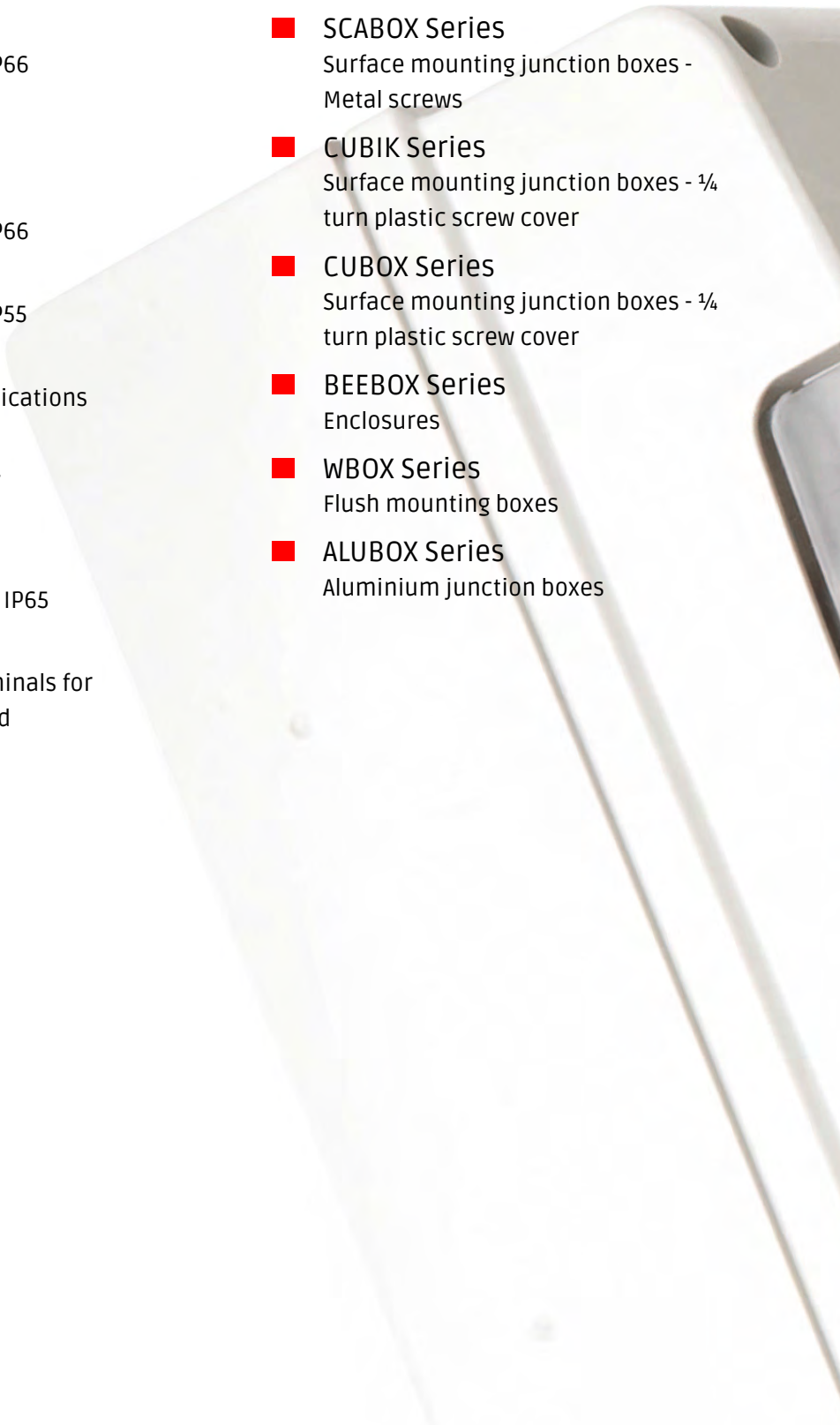

Empty enclosures
DOMINO IP66 Series

Consumer units IP66 >> M135

	DOMINO IP66 Series [enclosure]
	672.
	2 DIN
	CONSUMER UNIT
	SURFACE MOUNTING
	IP66

Modularity	No. Modules	Dimension	Power	
M135	2 MOD.	135x76x102mm	6W	**672.2002** 1/24

- Power dissipation calculated in conformity with CEI 23-49 italian standards

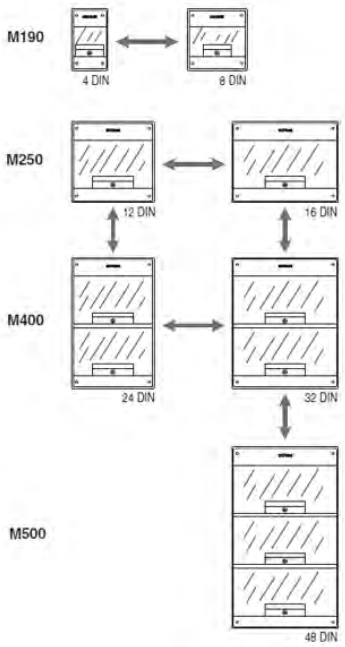

DOMINO IP66 Series
Modularity

Consumer units IP66 >> M190

				DOMINO IP66 Series [enclosure]			
				672.			
				4 DIN		**8 DIN**	
				CONSUMER UNIT			
				SURFACE MOUNTING			
Modularity	**No. Modules**	**Dimension**	**Power**	IP66			
M190	4 MOD.	190x112x106mm	10W	**672.2004**	1/16		
	8 MOD.	190x184x106mm	14W			**672.2008**	1/10
						672.2008.1101 [1]	1/10

[1] .1101: tinted window (standard) + with label + with triangular key + with IP00 connection device 1(5x10mm² - 5x16mm²)

- Power dissipation calculated in conformity with CEI 23-49 italian standards

Consumer units IP66 >> M250

				DOMINO IP66 Series [enclosure]			
				672.			
				12 DIN		**16 DIN**	
				CONSUMER UNIT			
				SURFACE MOUNTING			
Modularity	**No. Modules**	**Dimension**	**Power**	IP66			
M250	12 MOD.	250x256x140mm	22W	**672.2012**	1/9		
				672.2012.1101 [1]	1/9		
	16 MOD.	250x328x140mm	28W			**672.2016**	1/6
						672.2016.1101 [1]	1/6

[1] .1101: tinted window (standard) + with label + with triangular key + with IP00 connection device 1(5x10mm² - 5x16mm²)

- Power dissipation calculated in conformity with CEI 23-49 italian standards

Empty enclosures
DOMINO IP66 Series

Consumer units IP66 >> M400

				DOMINO IP66 Series [enclosure]			
				672.			
				24 DIN		**32 DIN**	
				CONSUMER UNIT			
				SURFACE MOUNTING			
Modularity	**No. Modules**	**Dimension**	**Power**	IP66			
M400	24 MOD.	400x256x140mm	30W	**672.4024**	1/6		
				672.4024.1102 [1]	1/6		
	32 MOD.	400x328x140mm	47W			**672.4032**	1/4
						672.4032.1102 [1]	1/4

[1] .1102: tinted window (standard) + with label + with triangular key + with IP00 connection devices 2(5x10mm² - 5x16mm²)

- Power dissipation calculated in conformity with CEI 23-49 italian standards

Consumer units IP66 >> M550

				DOMINO IP66 Series [enclosure]	
				672.	
				48 DIN	
				CONSUMER UNIT	
				SURFACE MOUNTING	
Modularity	**No. Modules**	**Dimension**	**Power**	IP66	
M550	48 MOD.	550x328x140mm	54W	**672.5048**	1/3
				672.5048.1102 [1]	1/3

[1] .1102: tinted window (standard) + with label + with triangular key + with IP00 connection devices 2(5x10mm² - 5x16mm²)

- Power dissipation calculated in conformity with CEI 23-49 italian standards

Consumer units IP66 >> M700

				DOMINO IP66 Series [enclosure]	
				672.	
				64 DIN	
				CONSUMER UNIT	
				SURFACE MOUNTING	
Modularity	**No. Modules**	**Dimension**	**Power**	IP66	
M700	64 MOD.	700x328x140mm	60W	**672.7064**	1
				672.7064.1102 [1]	1

[1] .1102: tinted window (standard) + with label + with triangular key + with IP00 connection devices 2(5x10mm² - 5x16mm²)

- Power dissipation calculated in conformity with CEI 23-49 italian standards

Empty enclosures
DOMINO IP66 Series

Modular enclosures - IP66 >> Enclosures with blank front panel >> M150

			DOMINO IP66 Series [enclosure]	
			672.	
			BOX	
			MODULAR ENCLOSURE	
			SURFACE MOUNTING	
Modularity	**Dimension**	**Power**	IP66	
M150	150x256x115mm	18W	**672.1101**	6
	150x328x115mm	20W	**672.1100**	1/6

- Power dissipation calculated in conformity with CEI 23-49 italian standards

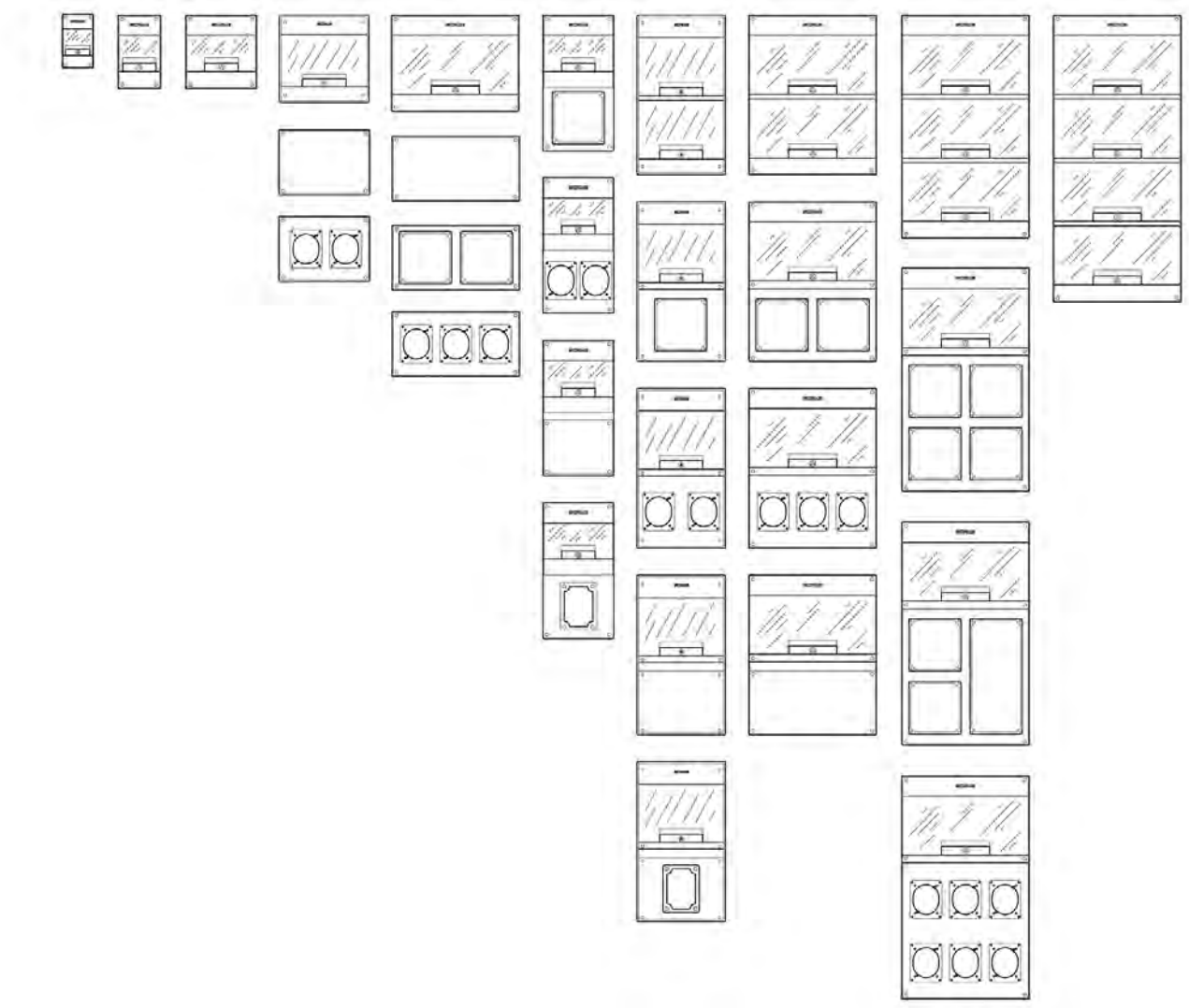

DOMINO IP66 System
Modularity

Modular enclosures - IP66 >> Enclosures with blank front panel >> M340

				DOMINO IP66 Series [enclosure]	
				672.	
				8 DIN	
				MODULAR ENCLOSURE	
				SURFACE MOUNTING	
Modularity	**No. Modules**	**Dimension**	**Power**	IP66	
M340	8 MOD.	340x184x106mm	14W	**672.2100**	1/10

- Power dissipation calculated in conformity with CEI 23-49 italian standards

Modular enclosures - IP66 >> Enclosures with blank front panel >> M400

				DOMINO IP66 Series [enclosure]			
				672.			
				12 DIN		**16 DIN**	
				MODULAR ENCLOSURE			
				SURFACE MOUNTING			
Modularity	**No. Modules**	**Dimension**	**Power**	IP66			
M400	12 MOD.	400x256x140mm	22W	**672.3100**	1/6		
				672.3100.1102 [1]	6		
	16 MOD.	400x328x140mm	28W			**672.4116**	1/4

[1] .1102: tinted window (standard) + with label + with triangular key + with IP00 connection devices 2(5x10mm² - 5x16mm²)

- Power dissipation calculated in conformity with CEI 23-49 italian standards

Empty enclosures
DOMINO IP66 Series

Modular enclosures - IP66 >> Enclosures with blank front panel >> M550

				DOMINO IP66 Series [enclosure]	
				672.	
				16 DIN	**24 DIN**
				MODULAR ENCLOSURE	
				SURFACE MOUNTING	
Modularity	**No. Modules**	**Dimension**	**Power**	IP66	
M550	16 MOD.	550x328x140mm	28W	**672.5116** 1/3	
	24 MOD.	550x477x150mm			**672.5122** 3 **672.5122.1102** [1] 3

[1] .1102: tinted window (standard) + with label + with triangular key + with IP00 connection devices 2(5x10mm² - 5x16mm²)

- Power dissipation calculated in conformity with CEI 23-49 italian standards

Modular enclosures - IP66 >> Enclosures with OMNIA Series cutouts >> M150

			DOMINO IP66 Series [enclosure]
			672.
			2 OMNIA
			MODULAR ENCLOSURE
			SURFACE MOUNTING
Modularity	**Dimension**	**Power**	IP66
M150	150x328x115mm	20W	**672.1200** 1/6

- Power dissipation calculated in conformity with CEI 23-49 italian standards

Modular enclosures - IP66 >> Enclosures with OMNIA Series cutouts >> M340

				DOMINO IP66 Series [enclosure]
				672.
				1 OMNIA - 8 DIN
				MODULAR ENCLOSURE
				SURFACE MOUNTING
Modularity	**No. Modules**	**Dimension**	**Power**	IP66
M340	8 MOD.	340x184x106mm	14W	**672.2200** 1/10

- Power dissipation calculated in conformity with CEI 23-49 italian standards

Modular enclosures - IP66 >> Enclosures with OMNIA Series cutouts >> M400

				DOMINO IP66 Series [enclosure]	
				672.	
				1 OMNIA - 12 DIN	**2 OMNIA - 16 DIN**
				MODULAR ENCLOSURE	
				SURFACE MOUNTING	
Modularity	**No. Modules**	**Dimension**	**Power**	IP66	
M400	12 MOD.	400x256x140mm	22W	**672.3200** 1/6	
	16 MOD.	400x328x140mm	28W		**672.4216** 1/4

- Power dissipation calculated in conformity with CEI 23-49 italian standards

Empty enclosures
DOMINO IP66 Series

Modular enclosures - IP66 >> Enclosures with OMNIA Series cutouts >> M550

				DOMINO IP66 Series [enclosure]	
				672.	
				4 OMNIA - 16 DIN	**4 OMNIA + 2 OPTIMA - 24 DIN**
				MODULAR ENCLOSURE	
				SURFACE MOUNTING	
Modularity	**No. Modules**	**Dimension**	**Power**	IP66	
M550	16 MOD.	550x328x140mm	28W	**672.5416** 1/3	
	24 MOD.	550x477x150mm			**672.5622** [1] 3

[1] With cutouts to contain 4 OMNIA Series 16A or 32A and 2 OPTIMA Series 16A or 32A

- Power dissipation calculated in conformity with CEI 23-49 italian standards
- Connection device to be fixed in the upper side.

CombiWizard
ScameOnLine
Discover the new application directly on the web, www.scame.com/Combiwizard.asp
Identifies the products compatible with pre-drilled enclosures SCAME!

Modular enclosures - IP66 >> Enclosures with OMNIA Series cutouts >> M550 (63A)

				DOMINO IP66 Series [enclosure]	
				672.	
				2+1(63A) OMNIA - 16 DIN	**4+1(63A) OMNIA - 24 DIN**
				MODULAR ENCLOSURE	
				SURFACE MOUNTING	
Modularity	**No. Modules**	**Dimension**	**Power**	IP66	
M550	16 MOD.	550x328x140mm	28W	**672.5316** [1] 1/3	
	24 MOD.	550x477x150mm			**672.5522** [2] 3

[1] With cutouts to contain 2 OMNIA Series 16A or 32A and 1 OMNIA Series 63A.
[2] With cutouts to contain 4 OMNIA Series 16A or 32A and 1 OMNIA Series 63A
- Power dissipation calculated in conformity with CEI 23-49 italian standards
- Connection device to be fixed in the upper side.

DOMINO IP66 Series
Flange 136x125mm (16A/32A)
Flange 136x275mm (63A)

Empty enclosures
DOMINO IP66 Series

Modular enclosures - IP66 >> Enclosures with OPTIMA Series cutouts >> M150

			DOMINO IP66 Series [enclosure]	
			672.	
			3 SOCKETS	**2 SOCKETS**
			MODULAR ENCLOSURE	
			SURFACE MOUNTING	
Modularity	**Dimension**	**Power**	IP66	
M150	150x256x115mm	18W		**672.1301** 6
	150x328x115mm	20W	**672.1300** 1/6	

- Power dissipation calculated in conformity with CEI 23-49 italian standards
- 16A (70x87mm) or, with suitable adaption, 32A socket (84x106mm).

Modular enclosures - IP66 >> Enclosures with OPTIMA Series cutouts >> M340

				DOMINO IP66 Series [enclosure]	
				672.	
				2 SOCKETS - 8 DIN	**1 SOCKET 32A - 8 DIN**
				MODULAR ENCLOSURE	
				SURFACE MOUNTING	
Modularity	**No. Modules**	**Dimension**	**Power**	IP66	
M340	8 MOD.	340x184x106mm	14W	**672.2300** [1] 1/10	**672.2301** [2] 1/10

[1] 16A (70x87mm)

[2] 32A (84x106mm).

- Power dissipation calculated in conformity with CEI 23-49 italian standards

Modular enclosures - IP66 >> Enclosures with OPTIMA Series cutouts >> M400

				DOMINO IP66 Series [enclosure]		
				672.		
				2 SOCKETS - 12 DIN	**1 SOCKET 63A - 12 DIN**	**3 SOCKETS - 16 DIN**
				MODULAR ENCLOSURE		
				SURFACE MOUNTING		
Modularity	**No. Modules**	**Dimension**	**Power**	IP66		
M400	12 MOD.	400x256x140mm	22W	**672.3300** [1] [2] 1/6	**672.3302** [3] 1/6	
	16 MOD.	400x328x140mm	28W			**672.4316** [2] 1/4

[1] Connection device to be fixed in the upper side.
[2] 16A (70x87mm) or, with suitable adaption, 32A socket (84x106mm).
[3] 63A (100x110mm)
- Power dissipation calculated in conformity with CEI 23-49 italian standards

Modular enclosures - IP66 >> Enclosures with OPTIMA Series cutouts >> M550

				DOMINO IP66 Series [enclosure]	
				672.	
				6 SOCKETS - 16 DIN	**8 SOCKETS - 24 DIN**
				MODULAR ENCLOSURE	
				SURFACE MOUNTING	
Modularity	**No. Modules**	**Dimension**	**Power**	IP66	
M550	16 MOD.	550x328x140mm	28W	**672.5616** 1/3	
	24 MOD.	550x477x150mm			**672.5822** 3 **672.5822.1102** [1] 3

[1] .1102: tinted window (standard) + with label + with triangular key + with IP00 connection devices 2(5x10mm² - 5x16mm²)
- Power dissipation calculated in conformity with CEI 23-49 italian standards
- 16A (70x87mm) or, with suitable adaption, 32A socket (84x106mm).

Empty enclosures
DOMINO IP66 Series

Modular enclosures - IP66 >> Single components >> M150(x256)

	DOMINO System		
	674.		
	BASE	**BLANK COVER**	**2 SOCKETS 70x87MM**
Dimension	WALL MOUNTING BASE	BLANK COVER	COVER WITH OPTIMA CUTOUTS
150x256mm		**674.1101** 6	**674.1301** [1] 6
150x256x115mm	**674.1001** 6		

[1] 16A (70x87mm) or, with suitable adaption, 32A socket (84x106mm).

Modular enclosures - IP66 >> Single components >> M150(x328)

	DOMINO System			
	674.			
	BASE	**BLANK COVER**	**2 OMNIA**	**3 SOCKETS 70x87MM**
Dimension	WALL MOUNTING BASE	BLANK COVER	COVER WITH OMNIA CUTOUTS	COVER WITH OPTIMA CUTOUTS
150x328mm		**674.1100** 1/6	**674.1200** 1/6	**674.1300** [1] 1/6
150x328x115mm	**674.1000** 1/6			

[1] 16A (70x87mm) or, with suitable adaption, 32A socket (84x106mm).

Surface mounting version >> Modular consumer units

				DOMINO IP40 Series [surface]			
				673.			
				Without window			
				CONSUMER UNIT			
				SURFACE MOUNTING			
Modularity	**No. Modules**	**Dimension**	**Power**	IP40			
2/4 DIN	2/4 MOD.	130x97x84mm	9W	**673.2102B**	1/36	**673.2102**	1/36
4 DIN	4+1/2 MOD.	190x135x108mm	11W	**673.2104B**	1/24	**673.2104**	1/24
8 DIN	8+2 MOD.	190x254x108mm	18W	**673.2108B**	1/12	**673.2108**	1/12
				673.2108B.0012 [1]	1/10		
12 DIN	12+2 MOD.	250x326x108mm	25W (50W*)	**673.2112B**	1/7	**673.2112**	1/7
				673.2112B.0012 [1]	1/6		
18 DIN	18+2 MOD.	250x434x140mm	43W (85W*)	**673.2118B**	1/6	**673.2118**	1/6
				673.2118B.0012 [1]	1	**673.2118.0011** [2]	1/6
24 DIN	24+4 MOD.	400x326x108mm	41W (87W*)	**673.4124B**	1/5	**673.4124**	1/5
				673.4124B.0012 [1]	1		
36 DIN	36+4 MOD.	400x434x140mm	75W (108W*)	**673.4136B**	1/4	**673.4136**	1/4
				673.4136B.0012 [1]	1		
54 DIN	54+6 MOD.	550x434x140mm	103W (140W*)	**673.5154B**	1/2	**673.5154**	1/2
				673.5154B.0012 [1]	1		

[1] .0012: without label + with IP00 connection devices 2(5x10mm² - 5x16mm²)

[2] .0011: without label + with IP00 connection device 1(5x10mm² - 5x16mm²)

- Power dissipation calculated in conformity with CEI 23-49 italian standards
- (*) Power dissipation calculated when 2 consumer units are on top of each other joined by specially designed accessories.

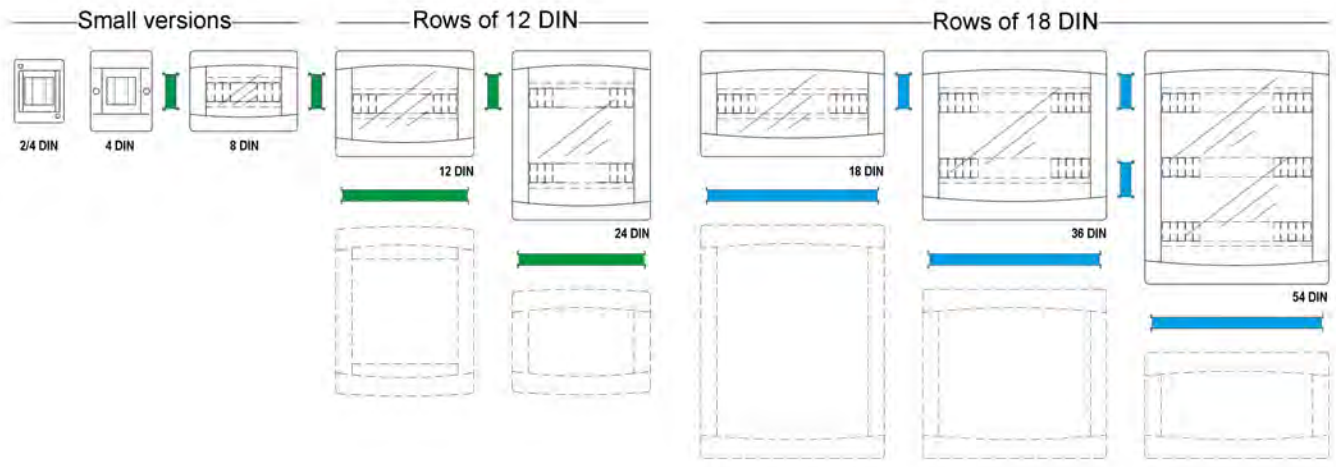

DOMINO IP40 Series
Modularity

Empty enclosures
DOMINO IP40 Series

Surface mounting version >> Modular consumer units

DOMINO IP40 Series [surface]

673.

With window

Modularity	No. Modules	Dimension	Power	CONSUMER UNIT SURFACE MOUNTING IP40			
8 DIN	8+1 MOD.	190x254x108mm	17W	**673.2008B** **673.2008B.2010** [2] **673.2008B.2012** [3]	1/12 1/12 1/10	**673.2008** **673.2008.1102** [1]	1/12 1/12
12 DIN	12+1 MOD.	250x326x108mm	24W (48W*)	**673.2012B** **673.2012B.2010** [2] **673.2012B.2012** [3]	1/7 1/7 1/6	**673.2012** **673.2012.1102** [1]	1/7 6
18 DIN	18+1 MOD.	250x434x140mm	42W (74W*)	**673.2018B** **673.2018B.2010** [2] **673.2018B.2012** [3]	1/6 1/6 1	**673.2018**	1/6
24 DIN	24+4 MOD.	400x326x108mm	35W (63W*)	**673.4024B** **673.4024B.2010** [2] **673.4024B.2012** [3]	1/5 1/5 1	**673.4024**	1/5
36 DIN	36+4 MOD.	400x434x140mm	57W (96W*)	**673.4036B** **673.4036B.2010** [2] **673.4036B.2012** [3]	1/4 1/4 1	**673.4036**	1/4
54 DIN	54+5 MOD.	550x434x140mm	75W (125W*)	**673.5054B** **673.5054B.2010** [2] **673.5054B.2012** [3]	1/2 1/2 1	**673.5054**	1/2

[1] .1102: tinted window (standard) + with label + with triangular key + with IP00 connection devices 2(5x10mm² - 5x16mm²)

[2] .2010: white window + without label + without triangular key + without connection device

[3] .2012: white window + without label + without triangular key + with IP00 connection devices 2(5x10mm² - 5x16mm²)

- Power dissipation calculated in conformity with CEI 23-49 italian standards
- (*) Power dissipation calculated when 2 consumer units are on top of each other joined by specially designed accessories.

Flush mounting version >> Modular consumer units

DOMINO IP40 Series [flush]

675.

With window

				CONSUMER UNIT			
				FLUSH MOUNTING			
Modularity	**No. Modules**	**Dimension**	**Power**	IP40			
4 DIN	4+1/2 MOD.	180x150x75mm	17W	**675.2104B** [4]	1/38	**675.2104** [4]	1/38
8 DIN	8+1 MOD.	210x254x75mm	21W	**675.2008B**	1/10	**675.2008**	1/10
				675.2008B.2010 [2]	1/10	**675.2008.1102** [1]	1/10
				675.2008B.2012 [3]	1/6		
12 DIN	12+1 MOD.	270x326x75mm	32W	**675.2012B**	1/7	**675.2012**	1/7
				675.2012B.2010 [2]	1/7	**675.2012.1102** [1]	1/7
				675.2012B.2012 [3]	1/4		
18 DIN	18+1 MOD.	270x434x75mm	36W	**675.2018B**	1/7	**675.2018**	1/7
				675.2018B.2010 [2]	1/7		
				675.2018B.2012 [3]	1		
24 DIN	24+4 MOD.	420x326x95mm	52W (74W*)	**675.4024B**	1/5	**675.4024**	1/5
				675.4024B.2010 [2]	1/5		
				675.4024B.2012 [3]	1		
36 DIN	36+4 MOD.	420x434x95mm	61W	**675.4036B**	1/3	**675.4036**	1/3
				675.4036B.2010 [2]	1/3		
				675.4036B.2012 [3]	1		
54 DIN	54+3 MOD.	570x434x95mm	71W	**675.5054B**	1/2	**675.5054**	1/2
				675.5054B.2010 [2]	1/2		
				675.5054B.2012 [3]	1		

[1] .1102: tinted window (standard) + with label + with triangular key + with IP00 connection devices 2(5x10mm² - 5x16mm²)

[2] .2010: white window + without label + without triangular key + without connection device

[3] .2012: white window + without label + without triangular key + with IP00 connection devices 2(5x10mm² - 5x16mm²)

[4] Without window.

- Power dissipation calculated in conformity with CEI 23-49 italian standards
- (*) Power dissipation calculated when 2 consumer units are on top of each other joined by specially designed accessories.

Empty enclosures
DOMINO System

Accessories for modular enclosures

			ENCLOSURES ACCESSORIES 654.		
Description	**Suitable for**	**Colour**	**Fixing pole kit**		
MOUNTING/FIXING PLATE	DOMINO IP66 M340			**654.0655** 4	
	DOMINO IP66 M400			**654.0657** 1	
	DOMINO IP66 M550			**654.0652** 2	
	DOMINO IP66 M700			**654.0656** 4	
METAL POLE	DOMINO IP66		**654.0650** 1		
PLATE WITH PROTECTION ROOF	DOMINO IP66 M400				**654.0653** 2
	DOMINO IP66 M550				**654.0654** 2

				ENCLOSURES ACCESSORIES 654.
Description	**Notes**	**Suitable for**	**Colour**	**Wall mounting brackets kit**
WALL MOUNTING BRACKETS KIT	(4 pz.)	DOMINO IP66		**654.0020** 1/10

Accessories for modular enclosures

			ENCLOSURES ACCESSORIES 654.			
Description	**Dimension**	**Suitable for**	**Zinc-coated steel mounting plate**			
MOUNTING PLATE	275x110mm	DOMINO IP66 M190	**654.0700**	1		
	275x180mm	DOMINO IP66 M250			**654.0710** [1] [2]	1

[1] Can be mounted in DOMINO IP66 M400 and M550 enclosures

[2] The plate comes with slots for fitting the safety transformer throught cable ties (item 654.0210 or 654.0220).

				ENCLOSURES ACCESSORIES 654.	
Description	**Notes**	**Suitable for**	**Colour**	**Connection kit [DOMINO IP66]**	
CONNECTION KIT	PG21	DOMINO IP66		**654.0038**	25
	PG36			**654.0040**	1/25

Empty enclosures
DOMINO System

Accessories for modular enclosures

				ENCLOSURES ACCESSORIES 654.			
Description	**Notes**	**Colour**	**Din**	**Connection kit [DOMINO IP40 surface mounting]**			
CONNECTION KIT	LATERAL.		12/24 DIN	**654.0041B**	6/60		
			18/36/54 DIN	**654.0042B**	6/60		
			12/24 DIN	**654.0041**	6/60		
			18/36/54 DIN	**654.0042**	6/60		
	TOP-BOTTOM		12/24 DIN			**654.0043B**	6
			18/36/54 DIN			**654.0044B**	6
			12/24 DIN			**654.0043**	6
			18/36/54 DIN			**654.0044**	6

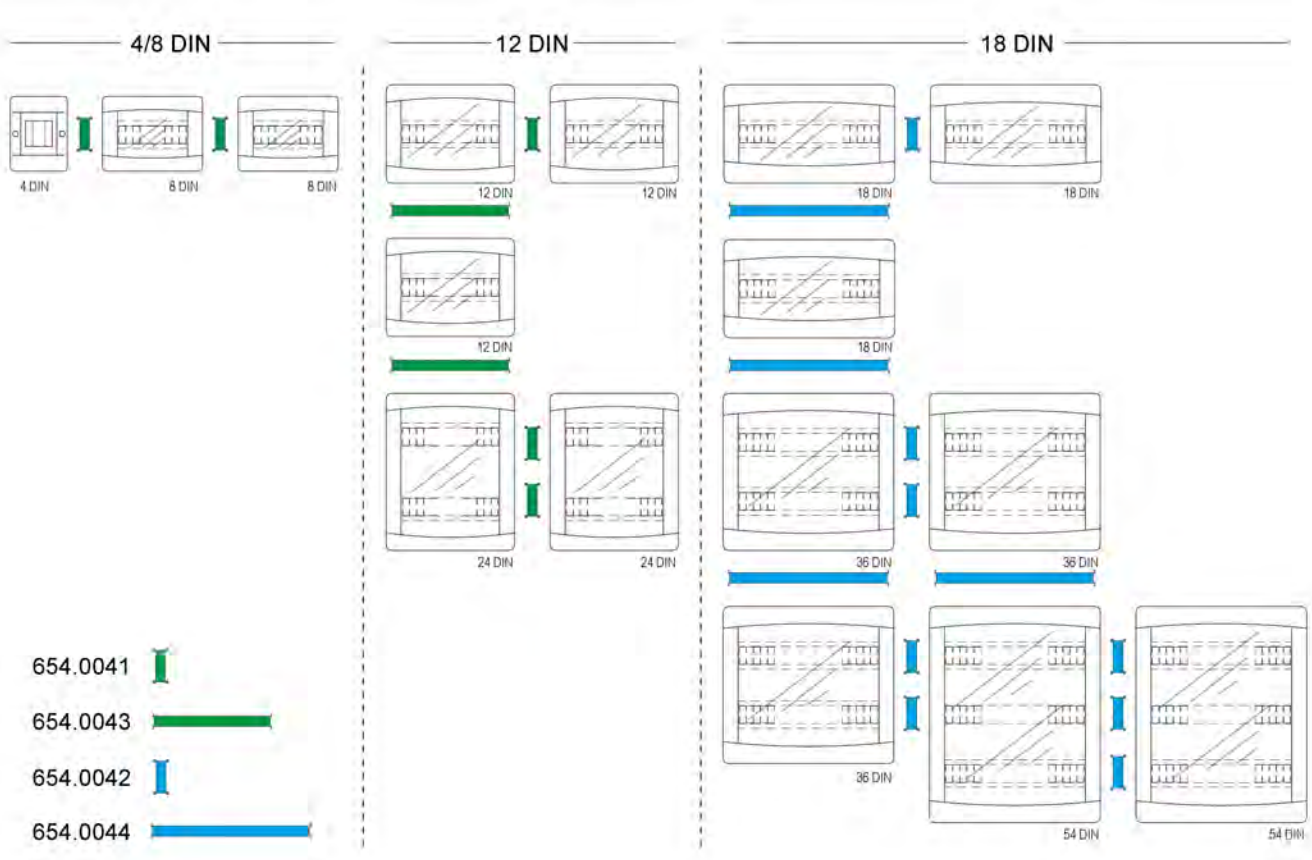

DOMINO IP40 Series
Item 654.0041: coupler for horizontal connection rows of 12 DIN
Item 654.0043: coupler for vertical connection rows of 12 DIN
Item 654.0042: coupler for horizontal connection rows of 18 DIN
Item 654.0045: coupler for vertical connection rows of 18 DIN

Accessories for modular enclosures

	ENCLOSURES ACCESSORIES			
	654.			
Description	**Suitable for**	**Colour**	**Connection kit [DOMINO IP40 flush mounting]**	
ADAPTOR				**654.0046** 200
CONNECTION KIT	DOMINO IP40 12-24 DIN DOMINO IP40 18-36-54-72 DIN		**654.0045** 6/72	

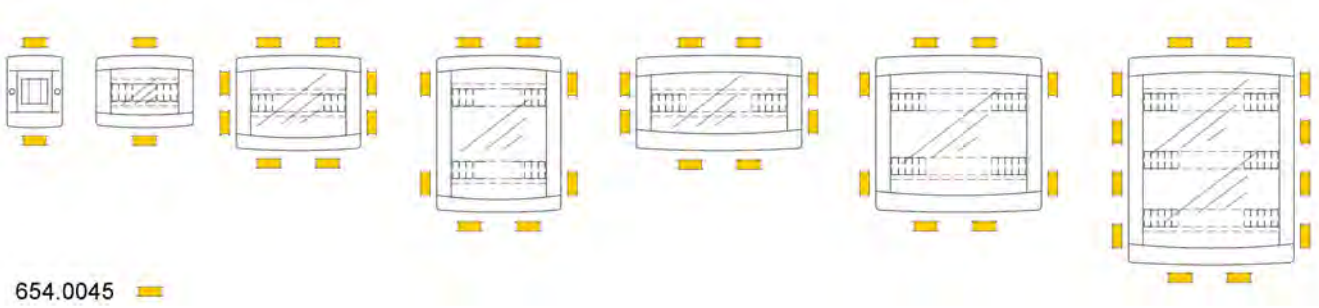

DOMINO IP40 Series
Modularity
Item 654.0045: coupler for connection of flush mounting models

Empty enclosures
DOMINO System

Accessories for modular enclosures

			ENCLOSURES ACCESSORIES	
			654.	
Description	**Dimension**	**Suitable for**	**Stand kit**	
STAND KIT	320x794x320mm	DOMINO IP66 M550		**654.0615**
	376x691x70mm	DOMINO IP66 M550 OMNIA	**654.0610** [1] 1	

[1] Folding

MOBIL Series
Support for DOMINO/OMNIA assemblies. The handy folding stand allows the panel to be transported even in limited-size motor vehicles .

Accessories for modular enclosures

ENCLOSURES ACCESSORIES
654.

Description	Suitable for	Colour	Cover sealing kit (2 pieces)	
COVER SEALING KIT	DOMINO IP40		**654.0033**	1/25
	DOMINO IP66		**654.0030**	1/25

ENCLOSURES ACCESSORIES
654.

Description	Suitable for	Yale key kit	
YALE KEY KIT	DOMINO IP40 MBOX (WIN)	**654.0072** [2]	1/10
	DOMINO IP66	**654.0070** [1]	1/10

[1] Unique Yale keys, the same key opens all locks
[2] For DIN window. Unique Yale keys, the same key opens all locks.
- For door (2 pieces).

ENCLOSURES ACCESSORIES
654.

Description	Suitable for	Handle kit	
HANDLE KIT	DOMINO IP66 GOMMA	**654.0060**	1/10

Empty enclosures
DOMINO System

Accessories for modular enclosures

	ENCLOSURES ACCESSORIES		
	654.		
Description	**Suitable for**	**Colour**	**Ridget profile for DIN rail**
DIN RAIL BRACKET	1 x EVOLUTION		**654.0091** 12/120
	2 x EVOLUTION		**654.0092** 12/120
RIDGED PROFILE FOR DIN RAIL			**654.0090** 20/100

EVOLUTION Series
EVOLUTION Series module mounted on DIN rail support

Accessories for modular enclosures

			ENCLOSURES ACCESSORIES	
			654.	
Description	**Notes**	**Din**	**DIN rail adjustable height**	
DIN RAIL KIT	DOMINO IP66	12 DIN	**654.0751**	1/10
		16 DIN	**654.0750**	1/10
		24 DIN	**654.0753**	10
		2x12 DIN	**654.0752**	10

- With mounting brackets

				ENCLOSURES ACCESSORIES			
				654.			
Description	**Notes**	**Colour**	**Din**		**Blank plate for DIN modules**		
BLANK PLATE FOR DIN MODULES	9x45mm		1/2 DIN			**654.0420** [1]	25/400
	18x45mm		1 DIN		**654.0410** [1]	25/250	
	70x50mm		4 DIN	**654.0400B**	25		
	72x45mm			**654.0400**	25		

[1] To be fixed on DIN rail

- When put between the modular devices these plates help to dissipate heat

Empty enclosures
DOMINO System

Accessories for modular enclosures

ENCLOSURES ACCESSORIES

654.

Description	Flange	Notes	Colour	IP	Blank plates		
BLANK PLATE FOR PANEL CUT OUTS	70x87mm			IP66	**654.0100** 25		
CUT-OUT PLATE		70x87 --> 50x60				**654.0103** 25	
	84x106mm	84x106 --> 75x75					**654.0108** 5

- With gasket

ENCLOSURES ACCESSORIES

654.

Description	Flange	Suitable for	Colour	IP	Blank plates [TOP22]		
CUT-OUT PLATE	70x87mm	1 x TOP22		IP66		**654.0101Y** 25	
					654.0101 25		
		2 x TOP22					**654.0102** 25

- With gasket
- For components TOP22 Series.

Accessories for modular enclosures

ENCLOSURES ACCESSORIES
654.

Description	Flange	Notes	Colour	IP	Blank plates [OMNIA]					
BLANK PLATE FOR PANEL CUT OUTS	136x125mm	OMNIA		IP66	**654.0120**	6/72				
CUT-OUT PLATE		16A [70x87]					**654.0125**	6/72		
		32A [84x106]							**654.0126**	6/72

- Covers for OMNIA Series cutouts
- IP66 when coupled with the relevant component

ENCLOSURES ACCESSORIES
654.

Description	Dimension	Notes	Transformers	
SAFETY TOROIDAL TRANSFORMER	Ø170xø39xh38mm L=270mm	300VA	**654.0220**	1
	Ø170xø45xh25mm L=270mm	150VA	**654.0210**	1

Safety Extra Low Voltage (SELV).
- Cables: black 220V~, red 24V~.
- F class

Empty enclosures
DOMINO System

Accessories for modular enclosures

	ENCLOSURES ACCESSORIES	DOMO Series
	654.	570.

Description	Flange	IP	Suitable for	Colour	Domestic kit			
FLUSH MOUNTING FRAME	70x87mm	IP55	EVOLUTION				**570.5052**	10/100
			BTICINO				**570.5012** [1]	10/100
COVER WITH INSERT	136x125mm		EVOLUTION		**654.0122**	6		
			BTICINO		**654.0121** [1]	6		

[1] Manufactured with the autorization from Bticino spa company and is suitable to house “Living International”, “Luna”, “Light” and “Light Tech” modules which are registered trademarks owned by Bticino.

- Modules snap into place.

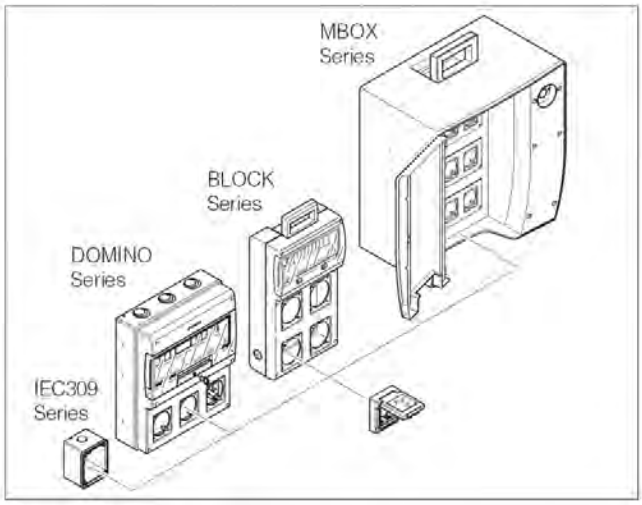

DOMO Series
Examples of installation (flange 70x87mm)

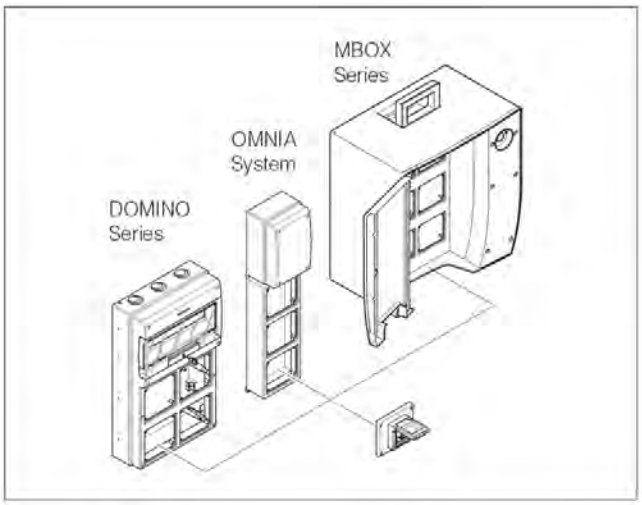

OMNIA Series
Examples of installation (flange 136x125mm)

DOMINO terminal blocks - T85

Description	Colour	IP	Version	ENCLOSURES ACCESSORIES 654. Terminal blocks for DIN rail	
TERMINAL BLOCK		IP20	HORIZONTAL		**654.0359** 1/10
			VERTICAL	**654.0358** 1/10	

- Terminals: 1x (5x10mm² and 5x16mm²).
- Phase R-S-T and earth/neutral terminal blocks

DOMINO terminal blocks >> Modular terminal blocks - IP20

Description	Suitable for	Colour	IP	ENCLOSURES ACCESSORIES 654. x1	
TERMINAL BLOCK	DOMINO IP66 4 DIN		IP20		**654.0365** 10
	DOMINO IP66 8 DIN			**654.0363** 1/10	

- Insulated by a plastic cover for the connection of the flexible cables
- For earth, phase and neutral conductors

DOMINO terminal blocks >> Modular terminal blocks - IP20

Description	Suitable for	Colour	IP	ENCLOSURES ACCESSORIES 654. x2	
TERMINAL BLOCK	DOMINO IP40 8 DIN DOMINO IP66 12-24 DIN		IP20	**654.0361** [1]	1/10
				654.0361C [2]	10

[1] There is special left for one additional terminal block

[2] Complete terminal block, supplied with one additional terminal block art. 654.0360.

- Insulated by a plastic cover for the connection of the flexible cables
- For earth, phase and neutral conductors

Description	Suitable for	Colour	IP	ENCLOSURES ACCESSORIES 654. x3	
TERMINAL BLOCK	DOMINO IP40 12-24 DIN DOMINO IP40 18-36-54-72 DIN DOMINO IP66 16-32-48-64 DIN		IP20	**654.0362** [1]	1/10
				654.0362C [2]	10

[1] There is special left for two additional terminal blocks

[2] Complete terminal block, supplied with two additional terminal blocks art. 654.0360.

- Insulated by a plastic cover for the connection of the flexible cables
- For earth, phase and neutral conductors

DOMINO terminal blocks >> Modular terminal blocks - IP20

				ENCLOSURES ACCESSORIES 654.
Description	**Suitable for**	**Colour**	**IP**	**x4**
TERMINAL BLOCK	DOMINO IP40 18-36-54-72 DIN		IP20	**654.0364** [1] 1/10 **654.0364C** [2] 10

[1] There is special left for three additional terminal blocks.
[2] Complete terminal block, supplied with three additional terminal blocks Art. 654.0360.
- Insulated by a plastic cover for the connection of the flexible cables
- For earth, phase and neutral conductors

				ENCLOSURES ACCESSORIES 654.
Description	**Notes**	**Colour**	**IP**	**Additional**
TERMINAL BLOCK	EXTRA		IP20	**654.0360** 1/10

- Insulated by a plastic cover for the connection of the flexible cables
- For earth, phase and neutral conductors

DOMINO terminal blocks - T85

			ENCLOSURES ACCESSORIES 654.
Description	**Suitable for**	**IP**	**Terminal blocks without insulated base - IP00**
TERMINAL BLOCK	DOMINO IP40 MBOX2 MBOX3 BLOCK4	IP00	**654.0349** 10/100

- Terminals: 1x (5x10mm² and 5x16mm²).
- Earth/neutral terminal blocks

Empty enclosures
FLAT Series

Enclosures

			FLAT Series			
			677.			
			GW650°C		GW850°C (suitable for plasterboard walls)	
			FLAT WALL FLUSH MTG CONS. UNIT			
No. Modules	**Dimension**	**Power**	IP40			
12+2 MOD.	343x368x90mm	25W	**677.1012.1** [1]	1	**677.1012.1-HW** [1]	1
24+4 MOD.	443x368x90mm	41W	**677.2024.1** [1]	1	**677.2024.1-HW** [1]	1
36+6 MOD.	568x368x90mm	54W	**677.3036.2** [2]	1	**677.3036.2-HW** [2]	1
48+8 MOD.	753x368x91mm	75W	**677.4048.2** [2]	1	**677.4048.2-HW** [2]	1
60+10 MOD.	878x368x93mm		**677.5060.2** [2]	1	**677.5060.2-HW** [2]	1

[1] .1 = 1x terminal block 2x(2x16mm² + 14x10mm²)

[2] .2 = 2x terminal block 2x(2x16mm² + 14x10mm²)

FLAT Series
Terminal block 2x(2x16mm² + 14x10mm²)

Enclosures

ENCLOSURES ACCESSORIES

654.

Description	Notes	Accessories and components	
TERMINAL BLOCK	2x25mm² + 14x16mm²	**654.0377**	25
YALE KEY KIT	FOR FLAT METAL	**654.0074**	10
WALL MOUNTING BRACKETS KIT	(4 pz.)	**654.0026**	15
KIT BRACKETS FOR PLASTER WALL		**654.0025**	50

Empty enclosures
BLOCK Series

Empty enclosures [BLANK PANEL]

Description	Installation	IP	Dimension	Power	BLOCK Series 632. BLOCK1 - 4 DIN		BLOCK3 - 6 DIN	
MODULAR ENCLOSURE	SURFACE MOUNTING	IP66	110x280x95mm	8W	**632.1510-000**	4		
			136x440x105mm	9W			**632.3510-000**	4
			212x415x105mm	14W				
			272x414x110mm	15W				

- Power dissipation calculated in conformity with CEI 23-49 italian standards

Empty enclosures [with cutouts 70x87]

Description	Installation	IP	Dimension	Power	BLOCK Series 632. BLOCK1 - 1 SOCKET - 4 DIN		BLOCK3 - 3 SOCKETS - 6 DIN	
MODULAR ENCLOSURE	SURFACE MOUNTING	IP66	110x280x95mm	8W	**632.1500-000** [1]	4		
			136x440x105mm	9W			**632.3500-000**	4
			212x415x105mm	14W				
			272x414x110mm	15W				

[1] Does not accept COMMAND Series 63A switches and above

- Power dissipation calculated in conformity with CEI 23-49 italian standards
- 70x87mm cut-outs
- (*) Cut-outs suitable for 32A socket outlets with 84x106 mm flange

BLOCK Series

632.

BLOCK3

632.3511-000 4

BLOCK4 - 11 DIN

632.4510-000 4

BLOCK4 - 11 DIN - YALE KEY

632.4710-000 4

BLOCK5 - 14 DIN

632.5510-000 2

BLOCK Series

632.

BLOCK3 - 4 SOCKETS

632.3501-000 4

BLOCK4 - 4 SOCKETS - 11 DIN

632.4500-000 4

BLOCK4 - 4 SOCKETS - 11 DIN - YALE KEY

632.4700-000 4

BLOCK5 - 5 SOCKETS - 14 DIN

632.5500-000 2

Empty enclosures
BLOCK Series

Empty enclosures [with cutouts 70x87 + 50x60]

					BLOCK Series	
					632.	
Description	**Installation**	**IP**	**Dimension**	**Power**	**BLOCK1 - 3 SOCKETS - 4 DIN**	**BLOCK3 - 4 SOCKETS - 6 DIN**
MODULAR ENCLOSURE	SURFACE MOUNTING	IP66	110x280x95mm	8W	**632.1530-000** [1] [2] 4	
			136x440x105mm	9W		**632.3520-000** [1] [2] 4
			212x415x105mm	14W		
			272x414x110mm	15W		

[1] 70x87mm cut-outs

[2] (*) Cut-outs suitable for 32A socket outlets with 84x106 mm flange

- Power dissipation calculated in conformity with CEI 23-49 italian standards
- 50x60 mm cut-outs

Accessories

				ENCLOSURES ACCESSORIES		
				654.		
					Blank plates	
Flange	**Notes**	**Colour**	**IP**	BLANK PLATE FOR PANEL CUT OUTS	CUT-OUT PLATE	BLANK PLATE FOR PANEL CUT OUTS
70x87mm	70x87 --> 50x60		IP66	**654.0100** 25	**654.0103** 25	
50x60mm						**654.0105** 25

- With gasket

BLOCK Series

632.

BLOCK3 - 6 SOCKETS - 6 DIN

632.3530-000 4

BLOCK4 - 5 SOCKETS - 11 DIN

632.4520-000 [1] [2] 4

BLOCK4 - 6 SOCKETS - 11 DIN

632.4530-000 [1] [2] 4

BLOCK5 - 7 SOCKETS - 14 DIN

632.5520-000 [1] 2

Empty enclosures
BLOCK Series

Accessories

ENCLOSURES ACCESSORIES

654.

Blank plates [TOP22]

Flange	Suitable for	Colour	IP	CUT-OUT PLATE		
70x87mm	1 x TOP22		IP66		**654.0101Y** 25	
				654.0101 25		
	2 x TOP22					**654.0102** 25

- With gasket
- For components TOP22 Series.

ENCLOSURES ACCESSORIES

654.

Blank plate for DIN modules

Notes	Colour	Din	BLANK PLATE FOR DIN MODULES		
9x45mm		1/2 DIN			**654.0420** [1] 25/400
18x45mm		1 DIN		**654.0410** [1] 25/250	
70x50mm		4 DIN	**654.0400B** 25		
72x45mm			**654.0400** 25		

[1] To be fixed on DIN rail

- When put between the modular devices these plates help to dissipate heat

Accessories

	ENCLOSURES ACCESSORIES
	654.

Description	Suitable for	IP	Terminal blocks without insulated base - IP00	
TERMINAL BLOCK	DOMINO IP40 MBOX2 MBOX3 BLOCK4	IP00	**654.0349**	10/100

- Terminals: 1x (5x10mm² and 5x16mm²).
- Earth/neutral terminal blocks

	ENCLOSURES ACCESSORIES
	654.

Description	Dimension	Notes	Transformers	
SAFETY TOROIDAL TRANSFORMER	Ø170xø39xh38mm L=270mm	300VA	**654.0207**	1
	Ø170xø45xh25mm L=270mm	150VA	**654.0205**	1

Safety Extra Low Voltage (SELV).
- Cables: black 220V~, red 24V~.
- F class

Empty enclosures
BLOCK Series

Accessories

	ENCLOSURES ACCESSORIES
	654.

Description	Suitable for	Support kit	
SUPPORT	BLOCK4	**654.0600**	2

BLOCK Series
Support

Empty enclosures [BLANK PANEL]

				ENERBOX Series	
				633.	
				Enclosures 6 DIN	**Enclosures 11 DIN**
				EMPTY ENCLOSURE	
				SURFACE MOUNTING	
Dimension	**Version**	**Notes**	**Power**	IP55	
285x145x107mm	PLAIN	4 DOMO	9W	**633.1010** 12	
285x235x107mm			15W		**633.2020** 6

- Side knockouts (DOMO 50x60mm): 4 closed
- Power dissipation calculated in conformity with CEI 23-49 italian standards

Side entrances
When fixing the DOMO Series side sockets (50x60 mm), use the special accessory (art. 570.2001)

Empty enclosures
ENERBOX Series

Empty enclosures [70x87]

			ENERBOX Series	
			633.	
			Enclosures 6 DIN	**Enclosures 11 DIN**
			EMPTY ENCLOSURE	
			SURFACE MOUNTING	
Dimension	**Notes**	**Power**	IP55	
285x145x107mm	4 DOMO + 1x16-32A	9W	**633.1013** 12	
	4 DOMO + 1x63A		**633.1014** 12	
285x235x107mm	4 DOMO + 1x16-32A + 1x63A	15W		**633.2026** 6
	4 DOMO + 2x16-32A			**633.2024** 6
	4 DOMO + 2x63A			**633.2025** 6

- Side knockouts (DOMO 50x60mm): 4 closed
- Power dissipation calculated in conformity with CEI 23-49 italian standards

Empty enclosures [70x87 + 50x60]

			ENERBOX Series	
			633.	
			Enclosures 6 DIN	**Enclosures 11 DIN**
			EMPTY ENCLOSURE	
			SURFACE MOUNTING	
Dimension	**Notes**	**Power**	IP55	
285x145x107mm	4 DOMO + 1x16-32A	9W	**633.1011** 12	
	4 DOMO + 1x63A		**633.1012** 12	
285x235x107mm	4 DOMO + 1x16-32A + 1x63A	15W		**633.2023** 6
	4 DOMO + 2x16-32A			**633.2021** 6
	4 DOMO + 2x63A			**633.2022** 6

- Side knockouts (DOMO 50x60mm): 2 open - 2 closed
- Power dissipation calculated in conformity with CEI 23-49 italian standards

Empty enclosures

			ADAPTO Series		
			603.	623.	
Description	**IP**	**Notes**	**Portable or suspended**		
MULTI -WAY ADAPTOR	IP44	3x(70x87mm)+2x(50x60mm)	**603.3005-000** 1/10		
	IP66	3x(70x87mm/84x106mm) - 6 DIN		**623.3500-000** 1/4	
		4x(70x87mm/84x106mm)			**623.4500-000** 1/4

- Zinc-plated steel carrying handle.
- Equipped with PG21 cable gland, cable clamp and terminal block.

			ADAPTO Series	
			625.	
Description	**IP**	**Notes**	**Elevated installation**	
MULTI -WAY ADAPTOR	IP66	3x(70x87mm/84x106mm) - 6 DIN	**625.3500-000** 1/4	
		4x(70x87mm/84x106mm)		**625.4500-000** 1/4

- Tubular stand to be ordered separately
- Equipped with PG21 cable gland, cable clamp and terminal block.

Accessories

	ENCLOSURES ACCESSORIES
	692.
Description	**Adaptors coupling kit**
ADAPTOR COUPLING KIT	**692.4342** 1/5

- 3-way and 4-way adaptors can be coupled together as shown in the drawing
- The kit includes all the screws, nuts, washers and seals required to couple together 3-way and 4-way adaptors.

	ENCLOSURES ACCESSORIES
	692.
Description	**Tubular stand**
TUBULAR STAND	**692.4340** 1

	ENCLOSURES ACCESSORIES
	654.
Description	**Mounting bracket for compressed air**
PLATE FOR COMP. AIR MOSE	**654.0050** 10

Accessories

ENCLOSURES ACCESSORIES
654.

Description	Flange	Notes	Colour	IP	Blank plates			
BLANK PLATE FOR PANEL CUT OUTS	70x87mm			IP66	**654.0100**	25		
CUT-OUT PLATE		70x87 --> 50x60					**654.0103**	25

- With gasket

ENCLOSURES ACCESSORIES
654.

Description	Flange	Suitable for	Colour	IP	Blank plates [TOP22]				
CUT-OUT PLATE	70x87mm	1 x TOP22		IP66			**654.0101Y**	25	
					654.0101	25			
		2 x TOP22							**654.0102**	25

- With gasket
- For components TOP22 Series.

Empty enclosures
MBOX Series

Empty enclosures [MBOX2]

				MBOX2 Series			
				656.			
Description	**Version**	**Notes**	**Power**	**Empty enclosures**		**Empty enclosures - With emergency push button**	
EMPTY ENCLOSURE	WITHOUT DOOR	4 OMNIA	27W	**656.0024-000**	1	**656.0924-000**	1
		4 OMNIA + KIT LUX		**656.0024-000L** [1]	1	**656.0924-000L** [1]	1
		6 OPTIMA	29W	**656.0026-000** [2]	1	**656.0926-000** [2]	1
		6 OPTIMA + KIT LUX		**656.0026-000L** [2] [1]	1	**656.0926-000L** [2] [1]	1

[1] Complete with lights kit

[2] 16A (70x87mm) or, with suitable adaption, 32A socket (84x106mm).

- Power dissipation calculated in conformity with CEI 23-49 italian standards

Night & day [Kit LUX]

MBOX turns on a new era with a box that is even more functional and complete. The addition of an automatic device (LED with extremely low consumption hooked up to a sensor) ensures proper lighting of the compartment containing outlets and switch gear and protection devices when the outdoor light intensity diminishes. This allows the product to be identified and used under conditions of poor lighting: ideal for the worksite, MBOX is also perfect for campsites and parking areas. Extremely compact and totally safe, MBOX features an innovative design and it is made in collision-proof and self-extinguishing technopolymer, to withstand collisions and atmospheric agents. In compliance with the highest safety standards, the MBOX series includes a complete product range and comes in many customized versions, with fast delivery.

Empty enclosures [MBOX3]

			MBOX3 Series 657.			
Description	**Version**	**Notes**	**Empty enclosures**		**Empty enclosures - With emergency push button**	
EMPTY ENCLOSURE	WITH DOOR	6 OMNIA	**657.0036-000**	1	**657.0936-000**	1
		9 OPTIMA	**657.0038-000** [1]	1	**657.0938-000** [1]	1
	WITHOUT DOOR	4+1 63A OMNIA	**657.0035-000**	1	**657.0935-000**	1

[1] 16A (70x87mm) or, with suitable adaption, 32A socket (84x106mm).

- Power dissipation calculated in conformity with CEI 23-49 italian standards
- Complete with lights kit

Empty enclosures [MBOX5]

			MBOX5 Series 658.			
Description	**Version**	**Notes**	**Empty enclosures**		**Empty enclosures - With emergency push button**	
EMPTY ENCLOSURE	WITH DOOR	12 OMNIA	**658.0050-000**	1	**658.0950-000**	1

- Power dissipation calculated in conformity with CEI 23-49 italian standards
- Complete with lights kit

Empty enclosures
MBOX Series

Accessories for enclosures

			MBOX2 Series	MBOX3 Series	MBOX5 Series
			656.	657.	658.
Description	**Dimension**	**Version**	**Emergency push button kit**		
EMERGENCY PUSH BUTTON KIT	MBOX2	WITHOUT DOOR	**656.0320** 10		
	MBOX3	WITH DOOR		**657.0340** 10	
		WITHOUT DOOR		**657.0330** 10	
	MBOX5	WITH DOOR			**658.0360** 10
		WITHOUT DOOR			**658.0350** 10

- Emergency push button kit composed of illuminated emergency push button, yallow faceplate with seat for emergency push button, neon lamp 230V~, NO contact and NC contact, lamp holder.

			MBOX2 Series
			656.
Description	**Notes**	**Suitable for**	**Emergency push button kit (button)**
EMERGENCY PUSH BUTTON KIT	(5 pz.)	MBOX2 MBOX3 MBOX5	**656.0300**

- Kit made up of pushbutton, contacts and light bulb

Accessories for enclosures

			MBOX3 Series	
			657.	
			Disconnector kit [MBOX3]	
Dimension	**Notes**	**Version**	ISOLATOR KIT	
MBOX3	100A	WITH DOOR	**657.0343**	10
		WITHOUT DOOR	**657.0333**	10
	16-32-40A	WITH DOOR	**657.0341**	10
		WITHOUT DOOR	**657.0331**	10
	63-80A	WITH DOOR	**657.0342**	10
		WITHOUT DOOR	**657.0332**	10

- Disconnector kit complete with: yellow faceplate and handle. Suitable for backpanel switches 590.YA... (not provided).

			MBOX5 Series	
			658.	
			Disconnector kit [MBOX5]	
Dimension	**Notes**	**Version**	ISOLATOR KIT	
MBOX5	100A	WITH DOOR	**658.0363**	10
		WITHOUT DOOR	**658.0353**	10
	16-32-40A	WITH DOOR	**658.0361**	10
		WITHOUT DOOR	**658.0351**	10
	63-80A	WITH DOOR	**658.0362**	10
		WITHOUT DOOR	**658.0352**	10

- Disconnector kit complete with: yellow faceplate and handle. Suitable for backpanel switches 590.YA... (not provided).

Empty enclosures
MBOX Series

Accessories for enclosures

	MBOX2 Series	MBOX3 Series	MBOX5 Series
	656.	657.	658.
		Tinted door kit	
Notes	DOOR KIT		
FUME'	**656.0012**	**657.0014**	**658.0016**

	MBOX2 Series	
	656.	
	Door spare parts (5 pz.)	
Suitable for	HINGES KIT	TRIANGULAR LOCK KIT
MBOX2 MBOX3 MBOX5		**656.0110** 5/10
MBOX3 MBOX5	**656.0010** 10	

	MBOX5 Series
	658.
	Plain panel

Description	**Dimension**	
PLAIN PANEL	MBOX5 WITH DOOR	**658.0369** 10

Accessories for enclosures

		ENCLOSURES ACCESSORIES	
		654.	
Description	**Suitable for**	**Yale key kit**	
YALE KEY KIT	DOMINO IP40 MBOX (WIN)	**654.0072** [1] [2]	1/10
	MBOX3-5 (DOOR)	**654.0071**	1/10

[1] For DIN window. Unique Yale keys, the same key opens all locks.
[2] For door (2 pieces).

	MBOX2 Series	MBOX3 Series	MBOX5 Series
	656.	657.	658.
Description		**Fuse-testing kit**	
FUSE CHECKER	**656.0420** 10	**657.0421** 10	**658.0422** 10

- Fuse-testing kit composed of fuse-testing device (654.0010) and facing with seat for fuse-tester and spare fuses

		MBOX2 Series	MBOX3 Series
		656.	657.
Description	**Suitable for**	**Stand kit**	
STAND KIT	MBOX2	**656.0120** 1	
	MBOX3 MBOX5		**657.0121** 1

Empty enclosures
MBOX Series

Accessories for enclosures

	MBOX2 Series		
	656.		
Description	**Turret fixing**		
TURRET FIXING KIT	**656.0220** 1		
MOUNTING/FIXING PLATE			**656.0222** 1
BACK CLOSING PLATE		**656.0221** 1	

MBOX Series
Pedestal application

Accessories for enclosures

ENCLOSURES ACCESSORIES

654.

Accessories and components

Suitable for	ACCESSORIES KIT	LIGHT KIT FOR MBOX	WALL MOUNTING BRACKETS KIT	CABLE SUPPORT KIT
MBOX2				**654.0051** 10
MBOX2 MBOX3 MBOX5		**654.0003** 10	**654.0024** 10	
MBOX3 MBOX5	**654.0002** [1] 10			

[1] The kit includes: 5x35mm² terminal block, M40 cable gland, wall mounting brackets, blank plate for 4 DIN modules.

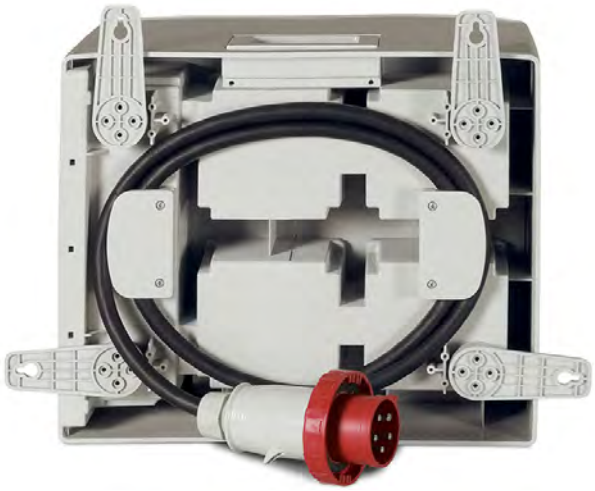

MBOX2 Series
Wall fixing brackets kit and cable support kit

Accessories for enclosures

				ENCLOSURES ACCESSORIES	
				654.	
				Appliance inlets (kit)	
				APPLIANCE INLET	
Current	**Poles**	**Volt**	**h**	IP67	
63A	3P+E	380-415V	6h	**654.906396**	1
	3P+N+E	346-415V		**654.906397**	1
125A				**654.912597**	1

Enclosures

				EASYBOX Series 655.					
				Thermoplastic alloy		Stainless steel Supplied with blank door already mounted		Varnished metal [suitable for inside use]	
Modularity	**Din**	**Version**	**Dimension**	CABINET					
M320	12 DIN (for row)	TYPE 1	320x370x210mm	**655.0010** [1]	1	**655.02101** [2]	1	**655.0110** [1]	1
		TYPE 2	460x370x245mm	**655.0020** [1]	1	**655.02201** [2]	1	**655.0120** [1]	1
M460	20 DIN (for row)	TYPE 3	460x520x245mm	**655.0030** [1]	1	**655.02301** [2]	1	**655.0130** [1]	1
		TYPE 4	460x670x245mm	**655.0040** [1]	1	**655.02401** [2]	1	**655.0140** [1]	1
M750	35 DIN (for row)	TYPE 5	755x715x345mm	**655.0050** [1]	1	**655.02501** [2]	1	**655.0150** [1]	1

[1] Base supplied without door

[2] Base supplied with blank door already mounted

EASYBOX Series
Key:
LT = Thermoplastic alloy
MV = Varnished metal
AI = Stainless steel

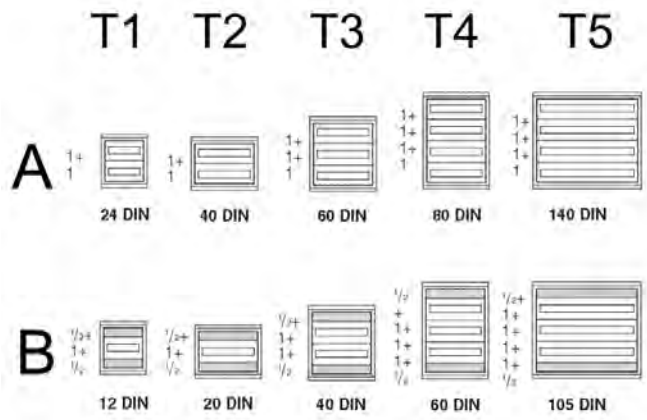

EASYBOX Series
Possible formats

Empty enclosures
EASYBOX Series

Enclosures

				EASYBOX Series	
				655.	
				Thermoplastic alloy - Base + door + panels + DIN rails	
Modularity	**Din**	**Version**	**Dimension**	CABINET	
M460	20 DIN (for row)	TYPE 2	460x370x245mm	**655.0020-K40**	1
		TYPE 3	460x520x245mm	**655.0030-K60**	1
		TYPE 4	460x670x245mm	**655.0040-K80**	1

Plain door

		EASYBOX Series			
		655.			
		Thermoplastic alloy		**Varnished metal**	
Modularity	**Version**	PLAIN DOOR			
M320	TYPE 1	**655.0011**	1	**655.0111**	1
M460	TYPE 2	**655.0021**	1	**655.0121**	1
	TYPE 3	**655.0031**	1	**655.0131**	1
	TYPE 4	**655.0041**	1	**655.0141**	1
M750	TYPE 5	**655.0051**	1	**655.0151**	1

Transparent door

		EASYBOX Series	
		655.	
		Thermoplastic alloy - Fumé	**Varnished metal - Door with marine window**
Modularity	**Version**	DOOR WITH WINDOW	
M320	TYPE 1	**655.0012** 1	**655.0112** 1
M460	TYPE 2	**655.0022** 1	**655.0122** 1
	TYPE 3	**655.0032** 1	**655.0132** 1
	TYPE 4	**655.0042** 1	**655.0142** 1
M750	TYPE 5	**655.0052** 1	**655.0152** 1

Mounting plate and internal door

			EASYBOX Series		
			655.		
			Mounting plate In thermoplastic material	**Mounting plate Stainless steel smooth zinc-coated**	**Internal door Blank grey**
Modularity	**Version**	**Dimension**	MOUNTING PLATE		INTERNAL DOOR
M320	TYPE 1	267x294mm		**655.0015** 1/4	
		267x294x4,5mm	**655.0014** 1/4		
					655.0016 1/8
M460	TYPE 2	407x294mm		**655.0025** 1/4	
		407x294x4,5mm	**655.0024** 1/4		
					655.0026 1/9
	TYPE 3	407x444mm		**655.0035** 1/2	
		407x444x4,5mm	**655.0034** 1/2		
					655.0036 1/9
	TYPE 4	407x594mm		**655.0045** 1/2	
		407x594x4,5mm	**655.0044** 1/2		
					655.0046 1/9
M750	TYPE 5	679x633mm		**655.0055** 1/2	
		679x633x4,5mm	**655.0054** 1/2		
					655.0056 1/2

Empty enclosures
EASYBOX Series

"Bars up"

			EASYBOX Series	
			655.	
			"bars up" - Mounting plate	**"bars up" - Internal door**
Modularity	**Version**	**Dimension**	MOUNTING PLATE	INTERNAL DOOR
M750	TYPE 5	267x633x2mm	**655.00550** 1/5	
				655.00560 1/4

Weather-proof enclosures - IP65

		EASYBOX Series	
		655.	
		Chassis (couple)	
Modularity	**Version**	UPRIGHT	
M320 M460	TYPE 1 - 2	**655.0019** 1/8	
M460	TYPE 3	**655.0039** 1/10	
M460 M750	TYPE 4 - 5	**655.0059** 1/6	

Cabinet

		EASYBOX Series			
		655.			
		Modular plates (1 module)		**Modular plates (2 modules)**	
Modularity	**Version**	MODULAR PLATE			
M320	TYPE 1	**655.32011**	1/8	**655.32012**	1/4
M460	TYPE 2 - 3 - 4	**655.46011**	1/8	**655.46012**	1/4
M750	TYPE 5	**655.75011**	1/6	**655.75012**	1/6

- In metal, with brackets.

Standard panels [DIN]

		EASYBOX Series			
		655.			
		DIN rail		**Panel with DIN vent-hole**	
Modularity	**Version**	DIN RAIL		PANEL WITH DIN VENT-HOLE	
M320	TYPE 1	**655.32010**	1/10	**655.32020**	1/5
M460	TYPE 2 - 3 - 4	**655.46010**	1/18	**655.46020**	1/4
M750	TYPE 5	**655.75010**	1/20	**655.75020**	1/12

Empty enclosures
EASYBOX Series

Standard panels

		EASYBOX Series					
		655.					
		Plain panel 1 module h=150mm		**Plain panel ½ module [h=75mm]**		**Plain panel ¼ module "Sfalsapasso" h=37.5mm (2 pc.)**	
Modularity	**Version**	PLAIN PANEL					
M320	TYPE 1	**655.32021**	1/8	**655.32022** [1]	1/10		
M460	TYPE 2 - 3 - 4	**655.46021**	1/10	**655.46022** [1]	1/10		
M750	TYPE 5	**655.75021**	1/24	**655.75022**	1/16	**655.75023** [1]	1/18

[1] 2 parts

Special panels

		EASYBOX Series			
		655.			
		Panel for moulded-case circuit breaker		**Internal door panel with lock**	
Modularity	**Version**	PANEL FOR MOULDED-CASE CIRCUIT		INTERNAL DOOR PANEL	
M320	TYPE 1	**655.32024** [1]	1/5		
M460	TYPE 2 - 3 - 4	**655.46024** [1]	1/4	**655.46025**	1/9
M750	TYPE 5	**655.75024** [1]	1/10		

[1] Includes metal plate with DIN rail

Accessories

	EASYBOX Series		
	655.		
Description	**Version**	**Dimension**	**Pole fixing kit**
POLE FIXING KIT	TYPE 1	max Ø300mm	**655.32090** 1/3
	TYPE 5		**655.75090** 1
	TYPE 2 - 3 - 4		**655.46090** 1/3

	EASYBOX Series		
	655.		
Description		**Locking kit**	
YALE KEY KIT		**655.910** 1/10	**655.911** 1/10
TRIPLE KEY KIT	**655.900** 10		

	EASYBOX Series				
	655.				
	Kit accessories				
KIT FOR PADLOCKING	KIT BRACKETS	VENTILATION KIT	DOCUMENT HOLDER	METAL FIXING BRACKETS	
655.920 [1] 1/10	**655.930** 1/10	**655.950** 1	**655.960** 1/10	**655.970** 1/10	

[1] Not suitable for metal doors. Padlock not supplied.

Empty enclosures
EASYBOX Series

Accessories

				ENCLOSURES ACCESSORIES
				654.
				Blank plate for DIN modules
Notes	**Suitable for**	**Colour**	**Din**	BLANK PLATE FOR DIN MODULES
70x50mm (10pz)	EASYBOX		4 DIN	**654.0401** 5/20

Empty enclosures [METAL]

				KIOSK Series 659.
Description	**IP**	**Dimension**	**Version**	**Type BLOCK**
EMPTY PILLAR BLOCK	IP56	400x1250x220mm	SINGLE-FACE	**659.BA5040-00**

- Pillar only, enclosures to be purchased separately.

				KIOSK Series 659.
Description	**IP**	**Dimension**	**Version**	**Type DOMINO**
EMPTY PILLAR DOMINO METAL	IP66	487x1235x375mm	SINGLE-FACE	**659.DA5041-00**
			DOUBLE-FACE	**659.DA5081-00**
EMPTY PILLAR DOMINO S.STEEL			SINGLE-FACE	**659.DB5041-00**
			DOUBLE-FACE	**659.DB5081-00**

- Pillar only, enclosures to be purchased separately.

				KIOSK Series 659.
Description	**IP**	**Dimension**	**Version**	**Type MBOX**
EMPTY PILLAR MBOX2 METAL	IP56	560x1235x350mm	SINGLE-FACE	**659.MA5041-00**
EMPTY PILLAR MBOX2 S.STEEL				**659.MB5041-00**

- Pillar only, enclosures to be purchased separately.

Empty enclosures
KIOSK Series

Empty enclosures [PLAST]

			KIOSK Series	
			659.	
Description	**IP**	**Dimension**	**Type SMART-C**	
EMPTY PILLAR SMART-C BASE	IP56	580x1400x450mm		**659.SCBASE**
EMPTY PILLAR SMART-C			**659.SC5041-00** [1] [2]	

[1] Structure not pre-drilled for the sockets

[2] Complete with lights kit

SMART-C
Water service detail

Empty enclosures [PLAST]

	KIOSK Series	
	659.	
Description	**IP**	**Dimension**	**Type SMART-K**	
EMPTY PILLAR SMART-K	IP56	340x810x260mm	**659.SK5041-00** [1][2]	
EMPTY PILLAR SMART-K BASE				**659.SKBASE**

[1] Structure not pre-drilled for the sockets
[2] Complete with lights kit

SMART-K
Dispensers also available with water service (upon request)

Empty enclosures
KIOSK Series

Empty enclosures [PLAST]

Description	IP	Dimension	KIOSK Series 659. Type SMART-X
EMPTY PILLAR SMART-X NO LIGHT	IP56	368x980x318mm	**659.SX5040-00**

- Structure not pre-drilled for the sockets
- Without lights kit

Empty enclosures [FIRE]

Description	IP	Dimension	Version	Notes	KIOSK Series 659. Type SMART-C
EMPTY PILLAR SMART-C FIRE	IP56	580x1400x450mm	FIRE ESTINGUISHER		**659.SCFIRE-E** [1]
			FIRE HOSE	UNI45 - 20m	**659.SCFIRE-M** [2]

[1] Fire extinguisher not included
[2] Fire hose included

Description	IP	Dimension	Version	Notes	KIOSK Series 659. Type SMART-K
EMPTY PILLAR SMART-K FIRE	IP56	340x810x260mm	FIRE ESTINGUISHER		**659.SKFIRE-E** [1]
			FIRE HOSE	UNI45 - 20m	**659.SKFIRE-M** [2]

[1] Fire extinguisher not included
[2] Fire hose included

Empty enclosures - IP54

	GOMMA Series	
	692.	
	Type 1	
IP	**Dimension**	DISTRIBUTION ASSEMBLY
IP54	235x235x180mm	**692.4202-00** 1
	400x400x275mm	**692.4201-00** 1

GOMMA Series
Example of panel available in customized configuration.

Empty enclosures
GOMMA Series

Empty enclosures - IP54

	GOMMA Series
	692.

Type 3

IP	Dimension	DISTRIBUTION ASSEMBLY	
IP54	270x270x231mm	**692.4203-00**	1

	GOMMA Series
	692.

Type 4

IP	Dimension	DISTRIBUTION ASSEMBLY	
IP54	210x260x98mm	**692.4204-00**	1
	230x130x70mm	**692.4206-00**	1
	380x130x83mm	**692.4205-00**	1

	GOMMA Series	
	690.	692.

Type A - One front units

Installation	IP	No. Modules	Dimension	Power	DISTRIBUTION ASSEMBLY		SURFACE MOUNTING ENCLOSURE	
SURFACE MOUNTING	IP54	12 MOD.	380x260x130mm	20W			**692.4200-00**	1
PORTABLE					**690.4200-00** [1]	1		

[1] Complete with handle

Empty enclosures - IP54

	GOMMA Series
	692.
	Type B - Two front units

IP	No. Modules	Dimension	Power	DISTRIBUTION ASSEMBLY	
IP54	8 MOD.	325x260x196mm	14W	**692.4300-00**	1

Accessories for enclosures

	GOMMA Series	
	692.	
Description	**Kit tubular stand**	
TUBULAR STAND	**692.4330**	1

	ENCLOSURES ACCESSORIES	
	654.	
Description	**Suitable for**	**Handle kit A**
HANDLE KIT	DOMINO IP66 GOMMA	**654.0060** 1/10

Empty enclosures
GOMMA Series

Accessories for enclosures

				ENCLOSURES ACCESSORIES		
				654.		
Description	**Notes**	**Din**	**IP**		**Kit window A**	
KIT FOR PADLOCKING				**654.0077** 10		
WINDOW KIT	+ KIT DIN	8 DIN	IP65			**654.0141-08** 10
		12 DIN				**654.0141-12** 10
		6 DIN				**654.0141-06** 10
		8 DIN			**654.0140-08** 10	
		12 DIN			**654.0140-12** 10	
		6 DIN			**654.0140-06** 10	
SCREW KNOBS KIT					**654.0140** 50	

Emergency switchboards

EMERGENCY Series
676.

Description	Colour	Installation	Dimension	Emergency switchboards
ENC. FOR EMERGENCY SYSTEMS		FLUSH MOUNTING	100x100x50mm	**676.25100** 1/13

- With 1 NO contact and 1 NC contact (2A, 250V)
- Complete with glass-breaking hammer.
- Can be mounted in flush mounting box with centre-to-centre distance 83.5 mm.
- With illuminated push buttom (24V incandescent or 250V fluorescent bayonet lamp -12V).

EMERGENCY Series
676.

Description	Colour	Installation	Dimension	Emergency switchboards
ENC. FOR EMERGENCY SYSTEMS		SURFACE MOUNTING	100x100x50mm	**676.35100** 1/14

- With 1 NO contact and 1 NC contact (2A, 250V)
- Complete with glass-breaking hammer.
- With illuminated push buttom (24V incandescent or 250V fluorescent bayonet lamp -12V).

EMERGENCY Series
676.

Description	Colour	Installation	Dimension	Notes	Emergency switchboards
ENC. FOR EMERGENCY SYSTEMS		SURFACE MOUNTING	205x220x140mm	6 DIN	**676.35201** 1/6

- Equipped with flange to facilitate junctions.

Empty enclosures
EMERGENCY Series

Emergency switchboards

				EMERGENCY Series 676.	
Description	**Colour**	**Installation**	**Dimension**	**Emergency switchboards**	
ENC. FOR EMERGENCY SYSTEMS		SURFACE MOUNTING	205x220x140mm	**676.35205**	1/6

- Equipped with flange to facilitate junctions.
- With bottom plate

		EMERGENCY Series 676.			
Description	**Dimension**	**Kit accessories**			
METAL FIXING BRACKETS				**676.10103**	20
BREAKABLE GLASS	100x100mm	**676.10101**	10		
GLASS BREAKER			**676.10102**	10	

Junction boxes >> Box with cable sleeves

Dimension	Cable outlet	Entries	SCABOX Series 680. Clipped cover		SCABOX Series 685. Screw cover	
			JUNCTION BOX IP55 GW 650°C			
Ø65x40mm	PG 16	4xØ23mm	**680.001**	4/100		
Ø80x40mm			**680.002**	4/100		
80x80x40mm		6xØ23mm	**680.003**	4/60		
100x100x50mm	PG 21	6xØ29mm			**685.004**	1/48
120x80x50mm					**685.005**	1/54
150x110x70mm		10xØ29mm			**685.006** [1]	1/40
190x140x70mm	PG 29	10xØ38mm			**685.007** [1]	1/24
240x190x90mm		12xØ38mm			**685.008** [2] [1]	1/12
300x220x120mm					**685.009** [2] [1]	1/6
380x300x120mm	PG 36	12xØ48mm			**685.010** [2] [1]	1/4
460x380x130mm		14xØ48mm			**685.011** [2] [3]	1

[1] It is possible to use the wall mounting brackets kit item 654.0021 (K1)
[2] Suitable for the hinges mounting
[3] It is possible to use the wall mounting brackets kit item 654.0023 (K2)

Junction boxes >> Box with blank sides

	SCABOX Series			
	686.			
	IP56 - Lower box - Blank cover		**IP56 - Lower box - Clear cover**	
	JUNCTION BOX			
	IP56			
	GW 650°C			
Dimension				
100x100x50mm	**686.204**	1/40	**686.224**	1/40
120x80x50mm	**686.205**	1/42	**686.225**	1/42
150x110x70mm	**686.206** [1]	1/48	**686.226** [1]	1/48
190x140x70mm	**686.207** [1]	1/30	**686.227** [1]	1/30
240x190x90mm	**686.208** [2] [1]	1/16	**686.228** [2] [1]	1/16
300x220x120mm	**686.209** [2] [1]	1/8	**686.229** [2] [1]	1/8
380x300x120mm	**686.210** [2] [1]	1/4	**686.230** [2] [1]	1/4
450x370x130mm	**686.211** [2] [3]	1	**686.231** [2] [3]	1

[1] It is possible to use the wall mounting brackets kit item 654.0021 (K1)

[2] Suitable for the hinges mounting

[3] It is possible to use the wall mounting brackets kit item 654.0023 (K2)

	SCABOX Series			
	686.			
	IP56 - Higher box - Blank cover		**IP56 - Higher box - Clear cover**	
	JUNCTION BOX			
	IP56			
	GW 650°C			
Dimension				
100x100x80mm	**686.404**	1/24	**686.424**	1/24
240x190x125mm	**686.408** [1]	1/6	**686.428** [1]	1/6
300x220x170mm	**686.409** [1]	1/6	**686.429** [1]	1/6
380x300x170mm	**686.410** [1] [2]	1/3	**686.430** [1] [2]	1/3
450x370x180mm	**686.411** [1] [3]	1	**686.431** [1] [3]	1

[1] Suitable for the hinges mounting

[2] It is possible to use the wall mounting brackets kit item 654.0021 (K1)

[3] It is possible to use the wall mounting brackets kit item 654.0023 (K2)

Surface mounting junction boxes - Metal screws

	ENCLOSURES ACCESSORIES
	654.
	Mounting plate
Dimension / **Colour**	MOUNTING PLATE
190x140mm	**654.0787** 1/30
240x190mm	**654.0788** 1/20
300x220mm	**654.0789** 1/15
380x300mm	**654.0790** 1/10
460x380mm	**654.0791** 1/10

			ENCLOSURES ACCESSORIES		
			654.		
Description	**Notes**	**Colour**	**Wall mounting kit**		
FIXING PLUG				**654.0022** [1] 100/2000	
WALL MOUNTING BRACKETS KIT	K1 (4 pz.)		**654.0021** 1/10		
	K2 (4 pz.)				**654.0023** 1/10

[1] Suitable for SCABOX, CUBIK and CUBOX clipped cover box.

Empty enclosures
SCABOX Series

Surface mounting junction boxes - Metal screws

ENCLOSURES ACCESSORIES

654.

Description	Notes	Colour	Kit accessories					
HINGES KIT							**654.0085**	1/20
COVER SEALING KIT	MBOX - SCABOX (2 pz.)		**654.0032**	1/25				
SEALING CAPS	(12 pz.)				**654.0080** [1] [2]	10/100		

[1] For providing total insulation e according to EN 60439-1.

[2] Only for surface mounting enclosure.

HF
HALOGEN FREE

Box with cable sleeves (release cover)

			CUBIK 650 Series		CUBIK 960 Series		
			687.		688.		
			Glow wire 650°C - HALOGEN FREE		Glow wire 960°C		
			JUNCTION BOX				
			IP55				
			GW 650°C		GW 960°C		
Dimension	**Cable outlet**	**Entries**					
Ø65x35mm	Ø23MM	4xØ23mm	**687.001**	4/100		**688.001**	4/100
Ø80x40mm			**687.002**	4/100		**688.002**	4/100
80x80x40mm		7xØ23mm	**687.003**	4/60	**688.003.R** [1]	4/60	**688.003** 4/60

[1] Box base red colored

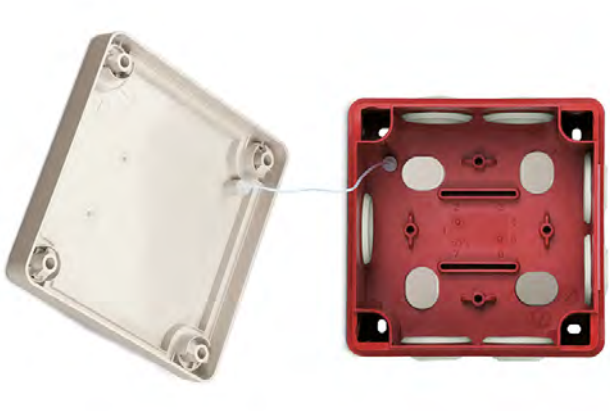

CUBIK Series
Glow wire 960°C versions (also in red) are identifiable by the symbol marked on the external side.

Empty enclosures
CUBIK Series

Box with cable sleeves (¼ turn plastic screw cover)

			CUBIK 650 Series		CUBIK 960 Series		
			687.		688.		
			Glow wire 650°C - HALOGEN FREE		Glow wire 960°C		
			JUNCTION BOX				
			IP55				
			GW 650°C		GW 960°C		
Dimension	**Cable outlet**	**Entries**					
100x100x50mm	Ø29MM	7xØ29mm	**687.004**	1/48	**688.004.R**[1]	1/48	**688.004** 1/48
120x80x50mm		6xØ29mm	**687.005**	1/54	**688.005.R**[1]	1/54	**688.005** 1/54
150x110x70mm		10xØ29mm	**687.006**	1/40			**688.006** 1/40

[1] Box base red colored

CUBIK Series
Surface mounting junction boxes - ¼ plastic screws - Cable sleeve (insulation perforation)

HF
HALOGEN FREE

Box with blank sides (¼ turn plastic screw cover)

	CUBIK 650 Series		CUBIK 960 Series		
	687.		688.		
	Glow wire 650°C - HALOGEN FREE		Glow wire 960°C		
	JUNCTION BOX				
	IP55				
	GW 650°C		GW 960°C		
Dimension					
100x100x50mm	**687.204**	1/40	**688.204.R**[1]	1/40	**688.204** 1/40
120x80x50mm	**687.205**	1/42	**688.205.R**[1]	1/42	**688.205** 1/42
150x110x70mm	**687.206**	1/48	**688.206.R**[1]	48	**688.206** 1/48

[1] Box base red colored

Surface mounting junction boxes - ¼ turn plastic screw cover

		ENCLOSURES ACCESSORIES
		654.
Description	**Colour**	**Kit accessories**
FIXING PLUG		**654.0022** 100/2000

- Suitable for SCABOX, CUBIK and CUBOX clipped cover box.

Empty enclosures
CUBOX Series

Surface mounting junction boxes - ¼ turn plastic screw cover

			CUBOX Series		
			689.		
			Glow wire 650°C - Version with cable sleeves (Release cover)	**Glow wire 650°C - Version with cable sleeves (¼ turn screw cover)**	**Glow wire 650°C - Version with blank sides (¼ turn screw cover)**
			JUNCTION BOX		
			IP55		
			GW 650°C		
Dimension	**Cable outlet**	**Entries**			
Ø65x40mm	Ø23MM	4xØ23mm	**689.001** 4/100		
Ø80x40mm			**689.002** 4/100		
80x80x40mm		7xØ23mm	**689.003** 4/60		
100x100x50mm	Ø29MM	7xØ29mm		**689.004** 48	
					689.204 40
120x80x50mm	Ø29MM	6xØ29mm		**689.005** 54	
					689.205 42
150x110x70mm	Ø29MM	10xØ29mm		**689.006** 40	
					689.206 48

Enclosures

Description	IP	Colour	Dimension	BEEBOX Series 639.	
SURFACE MOUNTING ENCLOSURE	IP41		200x150x40mm	**639.1040**	26
			200x150x60mm	**639.1060**	38
			200x150x80mm	**639.1080**	25
			200x300x120mm	**639.2120**	8
			200x300x40mm	**639.2040**	24
			200x300x60mm	**639.2060**	18
			200x300x80mm	**639.2080**	12
			400x300x120mm	**639.4120**	4
			400x300x60mm	**639.4060**	8
			400x300x80mm	**639.4080**	6

BEEBOX Series
Enclosures (200x150mm - 200x300mm - 400x300mm)

Empty enclosures
WBOX Series

Flush mounting boxes

			WBOX Series 875.
Description	**Colour**	**Dimension**	**Telephone flush mounting box**
FLUSH MOUNTING BOX		70x70mm	**875.4301** 12/60

- Provided complete with box, cover and screws.

Flush mounting round box ø65mm

			WBOX Series 875.	
Description	**Colour**	**Dimension**	**Flush junction boxes**	**Cover**
FLUSH MOUNTING BOX		Ø65mm	**875.4201** [1] 500	
COVER WITH FASTENERS				**875.4501** [2] 50/600
		Ø80mm		**875.4502** [2] 40/480

[1] Provided without cover and screw.
[2] Supplied as spare parts.

Flush mounting box 3 modules

			DATATEL Series	WBOX Series	
			180.	875.	
Description	**Colour**	**Dimension**	**Cover (screws not included)**	**Flush mounting junction boxes**	**Protective cover**
SCREW-DOWN COVER		83,5mm	**180.692** 12/72		
FLUSH MOUNTING BOX				**875.4303** [1] 6/300	
PROTECTIVE COVER		108x74mm			**875.4603** [2] [3] 120

[1] Provided without cover and screw.
[2] For 3-module boxes item 875.4303.
[3] Clip cover

Flush mounting junction boxes - Provided complete with box, cover and screws

			WBOX Series	
			875.	
Description	**Colour**	**Dimension**	**Flush mounting junction boxes**	
FLUSH MOUNTING BOX		92x92x45mm	**875.4410**	1/170
		118x96x50mm	**875.4411**	1/120
		118x96x70mm	**875.4411P**	90
		153x98x70mm	**875.4412**	1/70
		160x130x70mm	**875.4413**	1/44
		196x152x70mm	**875.4414** [1]	1/40
		294x152x70mm	**875.4415** [1]	1/24
		392x152x70mm	**875.4416** [1]	1/20
		480x160x70mm	**875.4417** [1]	1/12

[1] Provided without separator.
- Provided complete with box, cover and screws.

Empty enclosures
WBOX Series

Flush mounting junction boxes - Provided complete with box, cover and screws

			WBOX Series 875.	
Description	**Colour**	**Dimension**	**Separator**	
SEPARATOR		152mm	**875.4490**	25/200
		160mm	**875.4491**	25/200

- Application: to divide electric circuits.

			WBOX Series 875.	
Description	**Colour**	**Dimension**	**Cover (screws not included)**	
SCREW-DOWN COVER		92x92mm		**875.4510** 5/100
		118x96mm		**875.4511** 5/160
		153x98mm		**875.4512** 5/140
		160x130mm		**875.4513** 5/80
		196x152mm		**875.4514** 5/60
		294x152mm		**875.4515** 2/40
		392x152mm		**875.4516** 2/30
		480x160mm		**875.4517** 2/24
SCREWS FOR COVERS		3x19mm	**875.4500** 1/120	

Flush mounting junction boxes - Provided complete with box, cover and screws

			WBOX Series	
			875.	
Description	**Colour**	**Dimension**	**Protective cover**	
PROTECTIVE COVER		92x92mm	**875.4610**	5/100
		118x96mm	**875.4611**	5/160
		153x98mm	**875.4612**	5/140
		160x130mm	**875.4613**	5/80
		196x152mm	**875.4614**	5/60
		294x152mm	**875.4615**	2/40
		392x152mm	**875.4616**	2/30
		480x160mm	**875.4617**	2/24

- Clip cover

Empty enclosures
ALUBOX Series

Aluminium junction boxes

Description	IP	Colour	Dimension	ALUBOX Series 653. Enclosures	
JUNCTION BOX	IP66		100x100x59mm	**653.00**	1/32
			140x115x60mm	**653.01**	1/24
			166x142x64mm	**653.02**	1/16
			192x168x80mm	**653.03**	1/12
			253x217x93mm	**653.04**	1/6
			314x264x122mm	**653.05**	1/2
			410x315x153mm	**653.07**	1

Flat head screw

Counter-sunk head screw

- Enclosure and cover in die-cast aluminium.
- Externally varnished
- With stainless steel screws for attaching cover and self-tapping zinccoated steel screws for earthing the enclosure and cover.

EPDM
Holding seal in expanded EPDM, already mounted in place on the cover

Aluminium
Enclosures and covers in aluminium alloy with blank walls and covered.

Aluminium junction boxes

			ALUBOX Series 653.	
Description	**Colour**	**Dimension**	**Mounting plates**	
MOUNTING PLATE		140x115x60mm	**653.011**	1/40
		166x142x64mm	**653.012**	1/20
		192x168x80mm	**653.013**	1/20
		253x217x93mm	**653.014**	1/10
		314x264x122mm	**653.015**	1/10
		410x315x153mm	**653.017**	1/5

- Zinc-coated steel plate
- With zinc-coated steel self-tapping screws for attaching the plate

			ALUBOX Series 653.	
Description	**Colour**	**Dimension**	**DIN RAIL KIT**	
DIN RAIL KIT		100x100x59mm	**653.020**	1/25
		140x115x60mm	**653.021**	1/25
		166x142x64mm	**653.022**	1/20
		192x168x80mm	**653.023**	1/25
		253x217x93mm	**653.024**	1/20
		314x264x122mm	**653.025**	1/30
		410x315x153mm	**653.027**	1/50

1.7

Light-fittings

- MIZAR Series
  Light-fittings for fixed installations - 60W
- HYDRA Series
  Light-fittings for fixed installations - 100W
- HALE Series
  Portable lighting - 60W

Light-fittings for fixed installations - 60W

			MIZAR Series	
			780.	
			For incandescent lamps Thermoplastic diffuser	
			BULKHEAD LIGHT	
			RECTANGULAR	
Lamp power	**Lamp holder**	**Colour**	IP44	
60W	B22		**780.2262**	12
	E27		**780.2762**	12

- Thermoplastic diffuser. For continuous use, use the version with polycarbonate diffuser.
- Electric bulb not included.

			MIZAR Series			
			781.		786.	
			For incandescent lamps Polycarbonate diffuser			
			BULKHEAD LIGHT			
			RECTANGULAR			
Lamp power	**Lamp holder**	**Colour**	IP44		IP55	
60W	B22		**781.2261**	1/12	**786.2261**	1/12
		TRANSPARENT	**781.2260**	1/12	**786.2260**	1/12
	E27		**781.2761**	1/12	**786.2761**	1/12
		TRANSPARENT	**781.2760**	1/12	**786.2760**	1/12

- Polycarbonate diffuser
- Electric bulb not included.

Light-fittings for fixed installations - 60W

						MIZAR Series	
						781.	
						Red bulkhead lights for indicating working areas [E27]	
						BULKHEAD LIGHT	
IP	**Lamp holder**	**Volt**	**Cable length**	**Notes**	**Colour**	RECTANGULAR	
IP44	E27	24V	10m	x1 LAMP.		**781.2761/1**	1
			10+6m	x2 LAMP.		**781.2761/2**	1
			10+6+6+1m	x3 LAMP.		**781.2761/3**	1

- Rubber cable, 2x1.5mm².
- Diffuser colour: red.
- Bulb included, E27 25W 24V~.

LV-LUX Series
Distribution assemblies for night-time power supply of lights indicating working areas (art. 630.001 / 630.002)

Light-fittings for fixed installations - 60W

			MIZAR Series
			786.
			Red bulkhead lights for indicating working areas [LED+BATTERY]
			BULKHEAD LIGHT
IP	**Lamp holder**	**Colour**	RECTANGULAR
IP55	LED		**786.0100** 1/12

Power supply: four 1.5V "AA" batteries (not included).

- Switching on: automatic with twilight switch.
- Double operation: fixed light and flashing with switch that selects the desired function.

Light-fittings for fixed installations - 60W

IP	Lamp holder	Colour	MIZAR Series 786.	
			Red bulkhead lights for indicating working areas [LED]	
			BULKHEAD LIGHT	
			RECTANGULAR	
IP55	LED		**786.0200** 1	1/12
			786.0210 2	1/12
			786.0220 3	1/12

1 Automatic twilight turn-on. Fixed light.

2 Automatic twilight turn-on. Two operation modes: fixed light or flashing light. With mode selector switch.

3 Direct turn-on (without twilight turn-on) and fixed light

- With 220V-powered LED flasher.

MIZAR Series
MIZAR Series light-fittings are fitted with a slot on the rear of the base for hooking onto a nail, screw or hook, or for fastening to poles, pipes, bars or scaffolding using one or two cable ties.

Light-fittings for fixed installations - 100W

Bulkhead light ROUND

Version	IP	Lamp power	Lamp holder	HYDRA Series 791.		HYDRA Series 796.	
ROUND	IP44	100W	B22	**791.12210** [1]	1/6		
			E27	**791.12710** [2]	1/6		
	IP65		B22			**796.12210** [1]	1/6
			E27			**796.12710** [2]	1/6

[1] Lampholder in porcelain
[2] Lampholder in resin
- Diffuser and shell in polycarbonate.
- Lighting devices for fixed installation
- Steel screws with galvanised anti-rust treatment.
- Reflecting parabola in aluminium.

Bulkhead light SQUARE

Version	IP	Lamp power	Lamp holder	HYDRA Series 791.		HYDRA Series 796.	
SQUARE	IP44	100W	B22	**791.22210** [1]	1/6		
			E27	**791.22710** [2]	1/6		
	IP65		B22			**796.22210** [1]	1/6
			E27			**796.22710** [2]	1/6

[1] Lampholder in porcelain
[2] Lampholder in resin
- Diffuser and shell in polycarbonate.
- Lighting devices for fixed installation
- Steel screws with galvanised anti-rust treatment.
- Reflecting parabola in aluminium.

Light-fittings for fixed installations - 100W

				HYDRA Series	
				791.	796.
				Bulkhead light OVAL	
Version	**IP**	**Lamp power**	**Lamp holder**	BULKHEAD LIGHT	
OVAL	IP44	100W	B22	**791.32210** [1] 1/6	
			E27	**791.32710** [2] 1/6	
	IP65		B22		**796.32210** [1] 1/6
			E27		**796.32710** [2] 1/6

[1] Lampholder in porcelain
[2] Lampholder in resin

- Diffuser and shell in polycarbonate.
- Lighting devices for fixed installation
- Steel screws with galvanised anti-rust treatment.
- Reflecting parabola in aluminium.

		HYDRA Series	
		790.	
		Decorative frames	
Version	**Colour**	FRAME	
ROUND		**790.101** 1/6	
		790.102 1/6	
OVAL			**790.301** 1/6
			790.302 1/6

Light-fittings
HALE Series

Portable lighting - 60W

					HALE Series					
					770.					
						With protective guard and zinc-plated steel reflector				
					PORTABLE LAMP					
					STANDARD LID				HEAVY DUTY	
					IP20					
					60W					
Plug	**Volt**	**Cable length**	**Cable**	**Cable section**	E27					
	250V	5m	H05VV-F	2x0,75mm²		**770.207**	1/24			
		10m				**770.208**	1/18			
		without cable			**770.200**	1/24			**770.250** HD	1/24

HD Heavy Duty products are especially suited to grevious working conditions and are also resistant to highly salty environments

- Protective guard that can be opened for light bulb replacement.
- Lighting devices with protective guard and zinc-plated steel reflector:
- Handgrip in insulating, non-hygroscopic thermoplastic material with tilting system that prevents the lamp, when placed on a flat surface, to directly irradiate said surface and thus prevent dangerous overheating.
- Tapered cable gland
- Cable gland
- Adjustable hook.
- Rocker switch and screw clamp for cable replacement.
- For lamps up to 60W (incandescent)
- Screw cable stay.
- Cable H05VV-F (PVC)

2P+E-16A-(S17)

Portable lighting - 60W

					HALE Series			
					770.			
					With impact-resistant protective diffuser			
					PORTABLE LAMP			
					IP65		IP20	
					60W			
Plug	**Volt**	**Cable length**	**Cable**	**Cable section**	E27			
	250V	5m	H05VV-F	2x1mm²			**770.407** [1]	1/6
		10m					**770.408** [1]	1/6
IEC309	24V	5m				**770.405**		1/6
		10m				**770.406**		1/6
	250V	5m				**770.409**		1/6
		10m				**770.410**		1/6
		without cable			**770.400**	1/6		

[1] The degree of protection IP20 is due to preserve of plug for domestic use, while the apparatus is IP65; for example, if plugged into a socket in the garage the lamp can be used in the garden.

- Protective shell in collision-proof technopolymer
- Lighting devices with protective shell
- Cable H05RN-F (RUBBER)
- Handgrip in non-hygroscopic technopolymer.
- Cable gland
- Reflecting parabola in aluminium.
- Adjustable hook.
- Rocker switch and screw clamp for cable replacement.
- For lamps up to 60W (incandescent)
- Screw cable stay.

2

ASSEMBLIES

Combined units

2.1 Distribution assemblies PAG. 374
2.2 Industrial adaptors PAG. 424
2.3 Industrial cable reels PAG. 440

2.1

Distribution assemblies

- MBOX Series
  Distribution assemblies for construction site
- MEGA Series
  Distribution assemblies for construction site
- DOMINO Series
  Distribution assemblies
- BLOCK Series
  Distribution assemblies
- KIOSK Series
  Distribution pedestals terminals for campsites, public areas and marinas
- GOMMA Series
  Rubber distribution assemblies
- LV-LUX Series
  Distribution assemblies
- TRANSFORMER Series
  ACS IP55 portable unit with safety and isolating transformer
- MOBIL Series
  ACS IP55 distribution boxes with foldable stand
- SALVAMOTORE Series
  Stop-start units and motor cut-out - IP55
- Accessories and spare parts

Distribution assemblies

MBOX Series

For construction sites >> Interlocked-switch sockets without fuse >> MBOX2

	Sockets							MCB	
	16A			32A				16A	
	2P+E	3P+E	3P+N+E	3P+E	3P+N+E			1P	3P
no.						**General**	**Max power**		
4	2	1	1			MCB 4P 32A RCD 4P 40A 0,03A	18 KW	2	2
4	2	1		1		MCB 4P 32A RCD 4P 40A 0,03A	18 KW	2	1
4	2	2				MCB 4P 32A RCD 4P 40A 0,03A	18 KW	2	2
4	2			1	1	MCB 4P 32A RCD 4P 40A 0,03A	18 KW	2	

1 2m rubber cable H07RN-F

2 Plug IEC309 32A 3P+N+E

For construction sites >> Interlocked-switch sockets without fuse >> MBOX3

	Sockets					MCB		
	16A		32A			16A		32A
	2P+E	3P+E		3P+N+E		1P	3P	
no.					**General**	**Max power**			
4	2	1	1		MCB 4P 63A RCD 4P 63A 0,03A	35 KW	2	1	1
4	2	2			MCB 4P 32A RCD 4P 40A 0,03A	18 KW	2	2	
5	2	2	1		MCB 4P 63A RCD 4P 63A 0,03A	35 KW	2	1	1
5	2	2		1	MCB 4P 63A RCD 4P 63A 0,03A	35 KW	2	1	1
5	3	1	1		MCB 4P 63A RCD 4P 63A 0,03A	35 KW		1	1

1 Appliance inlet IEC309 63A 3P+N+E

- With door

2P+E 16A

3P+E 16A

3P+N+E 16A

3P+E 32A

3P+N+E 32A

MBOX2 Series

656.

Power supply with terminal block		Power supply with plug		Power supply with plug and emergency push button	
DISTRIBUTION ASSEMBLY (ACS)					
IP66				IP65	
Supply by terminal block		Plug			
656.7024-056	1	**656.7124-056** [1] [2]	1		
656.7024-006	1	**656.7124-006** [1] [2]	1	**656.7824-006** [1] [2]	1
656.7024-008	1	**656.7124-008** [1] [2]	1	**656.7824-008** [1] [2]	1
656.7024-611	1	**656.7124-611** [1] [2]	1	**656.7824-611** [1] [2]	1

MBOX3 Series

657.

Power supply with terminal block		Power supply with terminal block and emergency push button		Power supply with appliance inlet		Power supply with appliance inlet and emergency push button	
DISTRIBUTION ASSEMBLY (ACS)							
IP66		IP65		IP66		IP65	
Supply by terminal block				Appliance inlet			
657.8034-006	1						
657.8034-008	1						
657.8035-012	1	**657.8935-012**	1	**657.8135-012** [1]	1	**657.8835-012** [1]	1
657.8035-087	1	**657.8935-087**	1	**657.8135-087** [1]	1	**657.8835-087** [1]	1
657.8035-013	1	**657.8935-013**	1	**657.8135-013** [1]	1	**657.8835-013** [1]	1

Distribution assemblies

MBOX Series

For construction sites >> Interlocked-switch sockets without fuse >> MBOX5

	Sockets								
	16A			32A		63A			
	2P+E	3P+E	3P+N+E	3P+E	3P+N+E	3P+E	3P+N+E		
no.								**General**	**Max power**
10	4		2		2		2	RCBO 4P 100A 0,03A	55 KW
11	6		2		2		1	RCBO 4P 100A 0,03A	55 KW
6	2	1	1		1		1	RCBO 4P 100A 0,03A	55 KW
8	3	3		1		1		MCB 4P 100A	55 KW
9	4		3		1		1	MCB 4P 63A	35 KW

[1] Appliance inlet IEC309 125A 3P+N+E

[2] Appliance inlet IEC309 63A 3P+N+E

- With door

For construction sites >> Standard sockets >> MBOX2

	Sockets						MCB	
	16A				32A		16A	
	2P+E		3P+E	3P+N+E			1P	3P
no.						**General**	**Max power**	
6	2	1		2	1	MCB 4P 32A	18 KW	3	2
6		4	2			MCB 4P 32A RCD 4P 40A 0,03A	18 KW	3	1
6		6				MCB 4P 32A RCD 4P 40A 0,03A	18 KW	6	

[1] 2m rubber cable H07RN-F

[2] Plug IEC309 32A 3P+N+E

3P+E 63A

3P+N+E 63A

GERMAN STANDARD 2P+E 16A
Shuttered socket

2P+E 16A

3P+E 16A

3P+N+E 16A

3P+E 32A

3P+N+E 32A

MBOX5 Series

658.

MCB				RCD 0,03A	Power supply with terminal block	Power supply with terminal block and emergency push button	Power supply with appliance inlet	Power supply with plug and emergency push button
16A	32A			63A	DISTRIBUTION ASSEMBLY (ACS)			
1P	3P			4P	IP66	IP65	IP66	IP65
					Supply by terminal block		Appliance inlet	
4	2	2	2		**658.8050-702** 1	**658.8950-702** 1	**658.8150-702** [1] 1	**658.8850-702** [1]
6	2	2	1		**658.8050-705** 1	**658.8950-705** 1		**658.8850-705** [1]
2	2	1	1		**658.8056-138** 1	**658.8956-138** 1	**658.8156-138** [1] 1	**658.8856-138** [1]
3	3	1	1		**658.8058-040** 1		**658.8158-040** [1] 1	
4	3	1	1	2	**658.8059-043** 1	**658.8959-043** 1	**658.8159-043** [2] 1	

MBOX2 Series

656.

Power supply with terminal block	Power supply with terminal block and emergency push button	Power supply with plug	Power supply with plug and emergency push button
DISTRIBUTION ASSEMBLY (ACS)			
IP66	IP65	IP66	IP65
Supply by terminal block		Plug	
656.7026-739 1			
656.7026-640 1	**656.7926-640** 1	**656.7126-640** [1] [2] 1	**656.7826-640** [1] [2] 1
656.7026-639 1	**656.7926-639** 1	**656.7126-639** [1] [2] 1	**656.7826-639** [1] [2] 1

For construction sites >> Standard sockets >> MBOX3

	Sockets							MCB	
	16A			32A				16A	
	2P+E	3P+E	3P+N+E	3P+E	3P+N+E			1P+N	3P
no.						**General**	**Max power**		
9	3	2	2	1	1	MCB 4P 63A RCD 4P 63A 0,03A	35 KW	3	1
9	5	2	2			MCB 4P 63A RCD 4P 63A 0,03A	35 KW	5	1
9	9					MCB 4P 63A RCD 4P 63A 0,03A	35 KW	9	

- Appliance inlet IEC309 63A 3P+N+E

2P+E 16A

3P+E 16A

3P+N+E 16A

3P+E 32A

3P+N+E 32A

MCB			MBOX3 Series	
			657.	
			Power supply with appliance inlet and emergency push button	
16A	32A		DISTRIBUTION ASSEMBLY (ACS)	
4P	3P	4P	IP65	
			Appliance inlet	
1	1	1	**657.8839-827**	1
1			**657.8839-826**	1
			657.8839-825	1

Distribution assemblies for construction site

	Sockets					Terminal block		Outlet w/switch	Terminal block			MCB					
	16A		32A	63A	125A	16A	40A	50A	80A			16A			32A	40A	
	2P+E	3P+E	3P+N+E			2P		3P+N				1P	3P	2P	3P	4P	
no.										**General**	**Max power**						
11	2	2				4	1	1	1	MCB 4P 160A	90 KW	2	2	4		1	
12	4	4								MCB 4P 160A	90 KW						
8	4		2	1	1					MCB 4P 160A	90 KW	3			2		
9	4		4						1	MCB 4P 160A	90 KW	3			4		

	Sockets								MCB						RCBO 0,03A
	24V	16A			32A	63A	125A		40A	10A	16A	32A			63A
	2P	2P+E	3P+E	3P+N+E					1P	2P	1P	3P			4P
no.								**General**	**Max power**								
2						1	1	MCB 4P 160A	90 KW						1		
7		1		2	1	3		MCB 4P 160A	90 KW								
9	2	2	2		2	1		DISC. 4P 250A	110 KW	1	2	2	2	2	1	3	

3P+N+E 63A

3P+N+E 125A

24V

2P+E 16A

3P+E 16A

3P+N+E 16A

3P+N+E 32A

MCB		MCB+RC relay	RCBO 0,03A	RCBO 0,3A	RCD 0,03A					MEGA Series 661.	
50A	63A	125A	80A		25A		40A		63A	DISTRIBUTION ASSEMBLY (ACS)	
4P	3P	4P			2P	4P	2P	4P		IP55	
										With terminal block I/O	
1			1		4		1	2	1	**661.0160-057**	1
										661.0160-075	1
	1	1				1			2	**661.0160-065**	1
				1		1			2	**661.0160-068**	1

Standard stand

RCBO reg.		RCD 0,03A		MEGA Series 661.
125A		40A	63A	DISTRIBUTION ASSEMBLY (ACS)
4P				IP55
				With terminal block I/O
1				**661.5160-053**
		1	4	**661.5160-160**
				661.5250-008

Reduced stand

Distribution assemblies

DOMINO Series

With terminal blocks

		DOMINO IP66 Series [assembly]			
		671.			
		Without emergency push button		With emergency push button	
		DISTRIBUTION ASSEMBLY (ACS)			
		IP66		IP65	
General	Max power	Direct supply to main switch			
MCB 1P+N 16A RCD 2P 25A 0,03A	3 KW	**671.2012-005**	1		
MCB 2P 32A RCD 2P 40A 0,03A	6 KW	**671.2012-009**	1		
MCB 4P 16A RCD 4P 25A 0,03A	9 KW	**671.2012-006**	1		
MCB 4P 32A RCD 4P 40A 0,03A	18 KW	**671.2012-004**	1	**671.2912-004**	1
MCB 4P 63A RCD 4P 63A 0,03A	35 KW	**671.2012-003**	1	**671.2912-003**	1
MCB 4P 80A RCBO 4P 80A REG	45 KW	**671.2016-008**	1		
RCBO 4P 100A 0,03A	55 KW	**671.2012-002**	1	**671.2912-002**	1
RCBO 4P 125A	70 KW	**671.2012-001**	1	**671.2912-001**	1

2P+E 16A

3P+E 16A

With sockets [interlocked]

	Sockets				DOMINO IP66 Series [assembly] 670.			
					Portable - With cable and IEC309 plug			
	16A				DISTRIBUTION ASSEMBLY (ACS)			
	2P+E	3P+E			IP44		IP66	
no.			**General**	**Max power**	Plug			
2	1	1	MCB 4P 16A RCD 4P 25A 0,03A	9 KW	**670.3026-75** [1]	1		
2	2		MCB 2P 16A RCD 2P 25A 0,03A	3 KW	**670.3026-77** [2]	1	**670.3526-77** [2]	1
4	2	2	MCB 4P 16A RCD 4P 25A 0,03A	9 KW	**670.6046-03** [1]	1	**670.6546-03** [1]	1
4	3	1	MCB 4P 16A RCD 4P 25A 0,03A	9 KW	**670.6046-08** [1]	1		
4	4		MCB 2P 16A RCD 2P 25A 0,03A	3 KW	**670.6046-12** [2]	1	**670.6546-12** [2]	1

[1] Plug IEC309 16A 3P+N+E

[2] Plug IEC309 16A 2P+E

- 4m rubber cable H07RN-F

	Sockets				MCB		DOMINO IP66 Series [assembly] 671.	
							Surface mounting with protection devices	
	16A				16A		DISTRIBUTION ASSEMBLY	
	2P+E	3P+E			1P	3P	IP44	
no.			**General**	**Max power**			Supply by terminal block	
2	1	1	-	12 KW	1	1	**671.3020-75**	1
2	2		-	6 KW	2		**671.3020-77**	1
4	1	3	-	30 KW	1	3	**671.6040-07**	1
4	2	2	-	24 KW	2	2	**671.6040-03**	1
4	4		-	12 KW	4		**671.6040-95**	1

Distribution assemblies
DOMINO Series

With sockets [interlocked]

	Sockets 16A						DOMINO IP66 Series [assembly] 671.			
							Surface mounting - partly wired Without protection devices			
	2P+E	3P+E	3P+N+E				DISTRIBUTION ASSEMBLY			
no.				**Supply**	**Volt**	**Poles**	IP44		IP66	
2	1	1		-	400V	3P+N+E	**671.3025-75**	1		
4	1	3		-	400V	3P+N+E	**671.6045-07**	1		
4	2	2		-	400V	3P+N+E	**671.6045-03**	1	**671.6545-03**	1
4	2		2	-	400V	3P+N+E	**671.6045-06**	1		
4	3	1		-	400V	3P+N+E	**671.6045-08**	1		
4	4			-	230V	2P+E	**671.6045-95**	1	**671.6545-95**	1

With sockets [standard]

	Sockets 16A				MCB 16A		DISC. 32A		DOMINO IP66 Series [assembly] 670.	
									Portable - With cable and IEC309 plug	
	2P+E	3P+E			1P	3P	1P	3P	DISTRIBUTION ASSEMBLY (ACS) IP66	
no.			**General**	**Max power**					Plug	
3	2	1	MCB 4P 16A RCD 4P 25A 0,03A	9 KW			2	1	**670.3536-59** [1]	1
3	3		MCB 2P 16A RCD 2P 25A 0,03A	3 KW			3		**670.3536-62** [2]	1
6	3	3	MCB 4P 16A RCD 4P 25A 0,03A	9 KW			3	1	**670.6566-117** [1]	1
6	3	3	RCD 4P 40A 0,03A	18 KW	3	1			**670.6566-137** [3]	1
6	6		RCD 4P 40A 0,03A	18 KW	6				**670.6566-126** [3]	1

[1] Plug IEC309 16A 3P+N+E
[2] Plug IEC309 16A 2P+E
[3] Plug IEC309 32A 3P+N+E
- 4m rubber cable H07RN-F

2P+E 16A

3P+E 16A

3P+N+E 16A

With sockets [standard]

	Sockets				MCB		DOMINO IP66 Series [assembly]			
							671.			
							Surface mounting with protection devices			
	16A				16A		DISTRIBUTION ASSEMBLY			
	2P+E	3P+E			1P	3P	IP44		IP66	
no.			**General**	**Max power**			Supply by terminal block			
3	2	1	-	15 KW	2	1	**671.3030-59**	1	**671.3530-59**	1
3	3		-	9 KW	3		**671.3030-97**	1	**671.3530-97**	1
6	3	3	-	35 KW	3	3			**671.6560-117**	1

	Sockets					DOMINO IP66 Series [assembly]			
						671.			
						Surface mounting - partially wired Without protection devices			
	16A					DISTRIBUTION ASSEMBLY			
	2P+E	3P+E				IP44		IP66	
no.			**Supply**	**Volt**	**Poles**				
3	2	1	-	400V	3P+N+E	**671.3035-59**	1	**671.3535-59**	1
3	3		-	230V	2P+E	**671.3035-97**	1	**671.3535-97**	1
6	3	3	-	400V	3P+N+E	**671.6065-117**	1	**671.6565-117**	1

Distribution assemblies

BLOCK Series

Wired assemblies - Portable >> MCB protected versions

BLOCK Series

630.

Sockets								BLOCK3 [IP44]		BLOCK3 [IP66]	
	16A							DISTRIBUTION ASSEMBLY			
	2P+E				3P+E			IP44		IP66	
no.						General	Max power	Plug			
3	1			1	1	MCB 4P 16A	9 KW	**630.3000-052** [1]	1		
3	1			2		MCB 2P 16A	3 KW	**630.3000-054** [2]	1		
3	3					MCB 2P 16A	3 KW	**630.3000-055** [2]	1		
3		1		2		MCB 2P 16A	3 KW	**630.3000-056** [2]	1		
3			1	2		MCB 2P 16A	3 KW	**630.3000-401** [2]	1		
3				1	2	MCB 4P 16A	9 KW	**630.3000-060** [1]	1	**630.3500-060** [1]	1
3				2	1	MCB 4P 16A	9 KW	**630.3000-059** [1]	1	**630.3500-059** [1]	1
3				3		MCB 2P 16A	3 KW	**630.3000-062** [2]	1	**630.3500-062** [2]	1
3					3	MCB 3P 16A	9 KW	**630.3000-063** [3]	1	**630.3500-063** [3]	1

[1] Plug IEC309 16A 3P+N+E
[2] Plug IEC309 16A 2P+E
[3] Plug IEC309 16A 3P+E
- 1,5m rubber cable H07RN-F

GERMAN STANDARD 2P+E 16A
Shuttered socket

FRENCH STANDARD 2P+E 16A
Shuttered socket

ITALIAN STANDARD P17/11 2P+E 16A
Shuttered socket CEI 23-50

2P+E 16A

3P+E 16A

3P+N+E 16A

3P+E 32A

3P+N+E 32A

Wired assemblies - Portable >> MCB protected versions

BLOCK Series

630.

	Sockets									BLOCK4 [IP44]		BLOCK4 [IP66]	
	16A					32A				DISTRIBUTION ASSEMBLY			
	2P+E			3P+E	3P+N+E	3P+E	3P+N+E			IP44		IP66	
no.								**General**	**Max power**	Plug			
4	1	1	1	1				MCB 4P 16A	9 KW	**630.4000-001** [1]	1		
4	1	1	2					MCB 2P 16A	3 KW	**630.4000-002** [2]	1		
4	2	2						MCB 2P 16A	3 KW	**630.4000-010** [2]	1		
4			1	2		1		MCB 4P 16A	9 KW	**630.4000-327** [4]	1	**630.4500-327** [4]	1
4			1	3				MCB 4P 16A	9 KW	**630.4000-007** [1]	1	**630.4500-007** [1]	1
4			1		2		1	MCB 4P 16A	9 KW	**630.4000-329** [4]	1	**630.4500-329** [4]	1
4			2	1		1		MCB 4P 16A	9 KW	**630.4000-326** [4]	1	**630.4500-326** [4]	1
4			2	2				MCB 4P 16A	9 KW	**630.4000-003** [1]	1	**630.4500-003** [1]	1
4			2		1		1	MCB 4P 16A	9 KW	**630.4000-328** [4]	1	**630.4500-328** [4]	1
4			2		2			MCB 4P 16A	9 KW	**630.4000-006** [1]	1	**630.4500-006** [1]	1
4			3	1				MCB 4P 16A	9 KW	**630.4000-008** [1]	1	**630.4500-008** [1]	1
4			4					MCB 2P 16A	3 KW	**630.4000-012** [2]	1	**630.4500-012** [2]	1
4				4				MCB 3P 16A	9 KW	**630.4000-013** [3]	1	**630.4500-013** [3]	1

[1] Plug IEC309 16A 3P+N+E
[2] Plug IEC309 16A 2P+E
[3] Plug IEC309 16A 3P+E
[4] Plug IEC309 32A 3P+N+E
- 4m rubber cable H07RN-F

Distribution assemblies

BLOCK Series

Wired assemblies - Portable >> MCB+RCD protected versions [AS]

BLOCK Series

630.

BLOCK3 [IP44]

	Sockets							
	16A						DISTRIBUTION ASSEMBLY	
	2P+E			3P+E			IP44	
no.					**General**	**Max power**	Plug	
3	1		1	1	RCBO 4P 16A 0,03A	9 KW	**630.3006-052** [1]	1
3	1		2		MCB 2P 16A RCD 2P 25A 0,03A	3 KW	**630.3006-054** [2]	1
3	2		1		MCB 2P 16A RCD 2P 25A 0,03A	3 KW	**630.3006-362** [2]	1
3	3				MCB 2P 16A RCD 2P 25A 0,03A	3 KW	**630.3006-055** [2]	1
3		1	2		MCB 2P 16A RCD 2P 25A 0,03A	3 KW	**630.3006-056** [2]	1

[1] Plug IEC309 16A 3P+N+E

[2] Plug IEC309 16A 2P+E

- 1,5m rubber cable H07RN-F

GERMAN STANDARD 2P+E 16A
Shuttered socket

ITALIAN STANDARD P17/11 2P+E 16A
Shuttered socket CEI 23-50

2P+E 16A

3P+E 16A

PLURISTANDARD P40 2P+E 16A
Shuttered socket

Wired assemblies - Portable >> MCB+RCD protected versions [ASC]

BLOCK Series

630.

Sockets							BLOCK3 [IP44]		BLOCK3 [IP66]	
	16A						DISTRIBUTION ASSEMBLY (ACS)			
	2P+E			3P+E			IP44		IP66	
no.					General	Max power	Plug			
3	1		2		MCB 2P 16A RCD 2P 25A 0,03A	3 KW			**630.3506-054** [2]	1
3	2		1		MCB 2P 16A RCD 2P 25A 0,03A	3 KW			**630.3506-362** [2]	1
3	3				MCB 2P 16A RCD 2P 25A 0,03A	3 KW			**630.3506-055** [2]	1
3		1	1	1	RCBO 4P 16A 0,03A	9 KW			**630.3506-052** [1]	1
3		1	2		MCB 2P 16A RCD 2P 25A 0,03A	3 KW			**630.3506-056** [4] [2]	1
3			1	2	RCBO 4P 16A 0,03A	9 KW	**630.3006-060** [1]	1	**630.3506-060** [1]	1
3			2	1	RCBO 4P 16A 0,03A	9 KW	**630.3006-059** [1]	1	**630.3506-059** [1]	1
3			3		MCB 2P 16A RCD 2P 25A 0,03A	3 KW	**630.3006-062** [2]	1	**630.3506-062** [2]	1
3				3	RCBO 4P 16A 0,03A	9 KW	**630.3006-063** [3]	1	**630.3506-063** [3]	1

[1] Plug IEC309 16A 3P+N+E
[2] Plug IEC309 16A 2P+E
[3] Plug IEC309 16A 3P+E
[4] Products with domestic standard sockets IP66 even with plug inserted.
- 1,5m rubber cable H07RN-F

Distribution assemblies

BLOCK Series

Wired assemblies - Portable >> MCB+RCD protected versions

BLOCK Series

630.

	Sockets							BLOCK4 [IP44]		BLOCK4 [IP66]	
	16A							DISTRIBUTION ASSEMBLY (ACS)			
	2P+E			3P+E	3P+N+E			IP44		IP66	
no.						**General**	**Max power**	Plug			
4	1	1	1	1		MCB 4P 16A RCD 4P 25A 0,03A	9 KW	**630.4006-001** [1]	1	**630.4506-001** [1]	1
4	1	1	2			MCB 2P 16A RCD 2P 25A 0,03A	3 KW	**630.4006-002** [2]	1	**630.4506-002** [2]	1
4	2	2				MCB 2P 16A RCD 2P 25A 0,03A	3 KW	**630.4006-010** [2]	1	**630.4506-010** [2]	1
4			1	3		MCB 4P 16A RCD 4P 25A 0,03A	9 KW	**630.4006-007** [1]	1	**630.4506-007** [1]	1
4			2	2		MCB 4P 16A RCD 4P 25A 0,03A	9 KW	**630.4006-003** [1]	1	**630.4506-003** [1]	1
4			2		2	MCB 4P 16A RCD 4P 25A 0,03A	9 KW	**630.4006-006** [1]	1	**630.4506-006** [1]	1
4			3	1		MCB 4P 16A RCD 4P 25A 0,03A	9 KW	**630.4006-008** [1]	1	**630.4506-008** [1]	1
4			4			MCB 2P 16A RCD 2P 25A 0,03A	3 KW	**630.4006-012** [2]	1	**630.4506-012** [2]	1
4				4		MCB 3P 16A RCD 4P 25A 0,03A	9 KW	**630.4006-013** [3]	1	**630.4506-013** [3]	1
4					4	MCB 4P 16A RCD 4P 25A 0,03A	9 KW	**630.4006-188** [1]	1		

[1] Plug IEC309 16A 3P+N+E

[2] Plug IEC309 16A 2P+E

[3] Plug IEC309 16A 3P+E

- 4m rubber cable H07RN-F

GERMAN STANDARD 2P+E 16A
Shuttered socket

ITALIAN STANDARD P17/11 2P+E 16A
Shuttered socket CEI 23-50

2P+E 16A

3P+E 16A

3P+N+E 16A

Wired assemblies - Portable >> MCB+RCD protected versions

	Sockets					BLOCK Series			
						630.			
						Portable with support With IEC309 cable and plug		**Portable with support With IEC309 cable and plug**	
	16A					DISTRIBUTION ASSEMBLY (ACS)			
	2P+E	3P+E	3P+N+E			IP44		IP66	
no.				**General**	**Max power**	Plug			
4	2	2		MCB 4P 16A RCD 4P 25A 0,03A	9 KW	**630.4106-003** [1]	1	**630.4606-003** [1]	1
4	2		2	MCB 4P 16A RCD 4P 25A 0,03A	9 KW	**630.4106-006** [1]	1		
4	3	1		MCB 4P 16A RCD 4P 25A 0,03A	9 KW	**630.4106-008** [1]	1	**630.4606-008** [1]	1
4	4			MCB 2P 16A RCD 2P 25A 0,03A	3 KW	**630.4106-012** [2]	1	**630.4606-012** [2]	1
4		4		MCB 3P 16A RCD 4P 25A 0,03A	9 KW	**630.4106-013** [3]	1	**630.4606-013** [3]	1

[1] Plug IEC309 16A 3P+N+E

[2] Plug IEC309 16A 2P+E

[3] Plug IEC309 16A 3P+E

- Support with roof in steel: allows the distribution assembly to be sustained for a correct earth usage.

Distribution assemblies
BLOCK Series

Wired assemblies - Portable

BLOCK Series

630.

With safety transformer

Sockets						MCB		DISC.	DISTRIBUTION ASSEMBLY (ACS)			
24V	16A					6A	10A	16A				
2P	2P+E	3P+E				1P+N		1P	IP44		IP66	
no.				**General**	**Max power**				Plug			
4	2	1	1	RCBO 4P 16A 0,03A	9 KW	1			**630.4009-017** [2]	1	**630.4509-017** [2]	1
4	2	2		MCB 2P 16A RCD 2P 25A 0,03A	3 KW	1		2	**630.4009-323** [1]	1	**630.4509-323** [1]	1
4	2		2	RCBO 4P 16A 0,03A	9 KW	1			**630.4009-016** [2]	1	**630.4509-016** [2]	1
4	4			MCB 1P+N 3A	Trafo 300 VA (230/24V)		1		**630.4009-014** [1]	1	**630.4509-014** [1]	1

Safety transformer 220/24V~ - SELV

[1] Plug IEC309 16A 2P+E

[2] Plug IEC309 16A 3P+N+E

- 4m rubber cable H07RN-F

CombiFinder
ScameOnLine
Discover the new application directly on the web: www.scame.com/CombiFinder.asp
An application to help you find just the right assembled panel you need!
"CombiFINDER" allows you to quickly find a pre-assembled panel available from SCAME PARRE S.p.A., already certified and ready for use, with immediate shipping to your local wholesaler!

24V

2P+E 16A

3P+E 16A

GERMAN STANDARD
2P+E 16A
Shuttered socket

ITALIAN STANDARD
P17/11 2P+E 16A
Shuttered socket CEI 23-50

Wired assemblies - Surface mounting >> MCB protected versions

	Sockets						BLOCK Series			
							632.			
							BLOCK3 [IP44]		**BLOCK3 [IP66]**	
	16A						DISTRIBUTION ASSEMBLY			
	2P+E			3P+E			IP44		IP66	
no.					**General**	**Max power**	Direct supply to main switch			
3	1		1	1	MCB 4P 16A	9 KW	**632.3000-052**	1		
3	1		2		MCB 1P+N 16A	3 KW	**632.3000-054**	1		
3	3				MCB 1P+N 16A	3 KW	**632.3000-055**	1		
3		1	2		MCB 1P+N 16A	3 KW	**632.3000-056**	1		
3			1	2	MCB 4P 16A	9 KW	**632.3000-060**	1	**632.3500-060**	1
3			2	1	MCB 4P 16A	9 KW	**632.3000-059**	1	**632.3500-059**	1
3			3		MCB 1P+N 16A	3 KW	**632.3000-062**	1	**632.3500-062**	1
3				3	MCB 3P 16A	9 KW	**632.3000-063**	1	**632.3500-063**	1

Distribution assemblies

BLOCK Series

Wired assemblies - Surface mounting >> MCB protected versions

BLOCK Series

632.

Sockets									**BLOCK4 [IP44]**		**BLOCK4 [IP66]**	
	16A					32A			DISTRIBUTION ASSEMBLY			
	2P+E			3P+E	3P+N+E				IP44		IP66	
no.							**General**	**Max power**	Direct supply to main switch			
4	1	1	1	1			MCB 4P 16A	9 KW	**632.4000-001**	1		
4	1	1	2				MCB 1P+N 16A	3 KW	**632.4000-002**	1		
4	2	2					MCB 1P+N 16A	3 KW	**632.4000-010**	1		
4	2		1	1			MCB 4P 16A	9 KW	**632.4000-342**	1		
4			1	3			MCB 4P 16A	9 KW	**632.4000-007**	1	**632.4500-007**	1
4			1		2	1	MCB 4P 16A	9 KW	**632.4000-329**	1	**632.4500-329**	1
4			2	2			MCB 4P 16A	9 KW	**632.4000-003**	1	**632.4500-003**	1
4			2		1	1	MCB 4P 16A	9 KW	**632.4000-328**	1	**632.4500-328**	1
4			2		2		MCB 4P 16A	9 KW	**632.4000-006**	1	**632.4500-006**	1
4			3	1			MCB 4P 16A	9 KW	**632.4000-008**	1	**632.4500-008**	1
4			4				MCB 2P 16A	3 KW	**632.4000-012**	1	**632.4500-012**	1
4				4			MCB 3P 16A	9 KW	**632.4000-013**	1	**632.4500-013**	1

GERMAN STANDARD 2P+E 16A
Shuttered socket

ITALIAN STANDARD P17/11 2P+E 16A
Shuttered socket CEI 23-50

2P+E 16A

3P+E 16A

3P+N+E 16A

3P+N+E 32A

3P+E 32A

Wired assemblies - Surface mounting >> MCB+RCD protected versions

BLOCK Series

632.

Sockets											
	16A					32A					
	2P+E			3P+E	3P+N+E	3P+E	3P+N+E				
no.								General	Max power	BLOCK3 [IP44] DISTRIBUTION ASSEMBLY IP44 Direct supply to main switch	BLOCK3 [IP66] DISTRIBUTION ASSEMBLY IP66 Direct supply to main switch
3	1		1	1				RCBO 4P 16A 0,03A	9 KW	**632.3006-052** 1	
3	1		2					MCB 1P+N 16A RCD 2P 25A 0,03A	3 KW	**632.3006-054** 1	
3	3							MCB 1P+N 16A RCD 2P 25A 0,03A	3 KW	**632.3006-055** 1	
3		1	2					MCB 1P+N 16A RCD 2P 25A 0,03A	3 KW	**632.3006-056** 1	
3			1	1		1		RCBO 4P 16A 0,03A	9 KW	**632.3006-324** 1	**632.3506-324** 1
3			1	2				RCBO 4P 16A 0,03A	9 KW	**632.3006-060** 1	**632.3506-060** 1
3			1		1		1	RCBO 4P 16A 0,03A	9 KW	**632.3006-325** 1	**632.3506-325** 1
3			2	1				RCBO 4P 16A 0,03A	9 KW	**632.3006-059** 1	**632.3506-059** 1
3			3					MCB 1P+N 16A RCD 2P 25A 0,03A	3 KW	**632.3006-062** 1	**632.3506-062** 1
3				3				RCBO 4P 16A 0,03A	9 KW	**632.3006-063** 1	**632.3506-063** 1

Distribution assemblies

BLOCK Series

Wired assemblies - Surface mounting >> MCB+RCD protected versions

BLOCK Series

632.

Sockets

BLOCK4 [IP44] **BLOCK4 [IP66]**

	16A					32A				
	2P+E			3P+E	3P+N+E		DISTRIBUTION ASSEMBLY			
							IP44		IP66	
no.							Direct supply to main switch			
4	1	1	1	1			**632.4006-001**	1		
4	1	1	2				**632.4006-002**	1		
4	2	2					**632.4006-010**	1		
4			1	3			**632.4006-007**	1	**632.4506-007**	1
4			1		2	1	**632.4006-329**	1	**632.4506-329**	1
4			2	2			**632.4006-003**	1	**632.4506-003**	1
4			2		1	1	**632.4006-328**	1	**632.4506-328**	1
4			2		2		**632.4006-006**	1	**632.4506-006**	1
4			3	1			**632.4006-008**	1	**632.4506-008**	1
4			4				**632.4006-012**	1	**632.4506-012**	1
4				4			**632.4006-013**	1	**632.4506-013**	1
4					4				**632.4506-188**	1

General	Max power
MCB 4P 16A RCD 4P 25A 0,03A	9 KW
MCB 1P+N 16A RCD 2P 25A 0,03A	3 KW
MCB 1P+N 16A RCD 2P 25A 0,03A	3 KW
MCB 4P 16A RCD 4P 25A 0,03A	9 KW
MCB 4P 16A RCD 4P 25A 0,03A	9 KW
MCB 4P 16A RCD 4P 25A 0,03A	9 KW
MCB 4P 16A RCD 4P 25A 0,03A	9 KW
MCB 4P 16A RCD 4P 25A 0,03A	9 KW
MCB 4P 16A RCD 4P 25A 0,03A	9 KW
MCB 4P 16A RCD 4P 25A 0,03A	9 KW
MCB 1P+N 16A RCD 2P 25A 0,03A	3 KW
MCB 3P 16A RCD 4P 25A 0,03A	9 KW
MCB 4P 16A RCD 4P 25A 0,03A	9 KW

GERMAN STANDARD 2P+E 16A
Shuttered socket

ITALIAN STANDARD P17/11 2P+E 16A
Shuttered socket CEI 23-50

2P+E 16A

3P+E 16A

3P+N+E 16A

3P+N+E 32A

Wired assemblies - Surface mounting >> Without protection devices

	Sockets								BLOCK Series			
									632.			
	16A								BLOCK3 [IP44]		BLOCK3 [IP66]	
	2P+E			3P+E					DISTRIBUTION ASSEMBLY			
no.					**Supply**	**Current**	**Volt**	**Poles**	IP44		IP66	
3	1		1	1	-	16A	400V	3P+N+E	**632.3005-052**	1		
3	1		2		-	16A	230V	2P+E	**632.3005-054**	1		
3	3				-	16A	230V	2P+E	**632.3005-055**	1		
3		1	2		-	16A	230V	2P+E	**632.3005-056**	1		
3			1	2	-	16A	400V	3P+N+E	**632.3005-060**	1	**632.3505-060**	1
3			2	1	-	16A	400V	3P+N+E	**632.3005-059**	1	**632.3505-059**	1
3			3		-	16A	230V	2P+E	**632.3005-062**	1	**632.3505-062**	1
3				3	-	16A	400V	3P+E	**632.3005-063**	1	**632.3505-063**	1

Distribution assemblies

BLOCK Series

Wired assemblies - Surface mounting >> Without protection devices

	Sockets										
	16A				32A	16A	32A				
	2P+E			3P+E		3P+N+E					
no.								**Supply**	**Current**	**Volt**	**Poles**
4	1	1	1	1				-	16A	400V	3P+N+E
4	1	1	2					-	16A	230V	2P+E
4	2	2						-	16A	230V	2P+E
4			1	2	1			-	16A	400V	3P+N+E
4			1	3				-	16A	400V	3P+N+E
4			1			2	1	-	16A	400V	3P+N+E
4			2	1	1			-	16A	400V	3P+N+E
4			2	2				-	16A	400V	3P+N+E
4			2			1	1	-	16A	400V	3P+N+E
4			2			2		-	16A	400V	3P+N+E
4			3	1				-	16A	400V	3P+N+E
4			4					-	16A	230V	2P+E
4				4				-	16A	400V	3P+E

GERMAN STANDARD 2P+E 16A
Shuttered socket

ITALIAN STANDARD P17/11 2P+E 16A
Shuttered socket CEI 23-50

2P+E 16A

3P+E 16A

3P+N+E 16A

3P+E 32A

3P+N+E 32A

BLOCK Series

632.

BLOCK4 [IP44]		BLOCK4 [IP66]	
DISTRIBUTION ASSEMBLY			
IP44		IP66	
632.4005-001	1		
632.4005-002	1		
632.4005-010	1		
632.4005-327	1	**632.4505-327**	1
632.4005-007	1	**632.4505-007**	1
632.4005-329	1	**632.4505-329**	1
632.4005-326	1	**632.4505-326**	1
632.4005-003	1	**632.4505-003**	1
632.4005-328	1	**632.4505-328**	1
632.4005-006	1	**632.4505-006**	1
632.4005-008	1	**632.4505-008**	1
632.4005-012	1	**632.4505-012**	1
632.4005-013	1	**632.4505-013**	1

Distribution assemblies

BLOCK Series

Wired assemblies - Surface mounting

BLOCK Series

632.

With safety transformer

Sockets						MCB		DISTRIBUTION ASSEMBLY			
24V	16A					6A	10A				
2P	2P+E	3P+E				1P+N		IP44		IP66	
no.			**General**	**Max power**				Direct supply to main switch			
4	2	1	1	MCB 4P 16A	Trafo 150 VA (230/24V)	1		**632.4009-017**	1	**632.4509-017**	1
4	2	2		MCB 1P+N 16A	Trafo 150 VA (230/24V)	1		**632.4009-015**	1	**632.4509-015**	1
4	2		2	MCB 4P 16A	Trafo 150 VA (230/24V)	1		**632.4009-016**	1	**632.4509-016**	1
4	4			MCB 1P+N 3A	Trafo 300 VA (230/24V)		1	**632.4009-014**	1	**632.4509-014**	1

Safety transformer 220/24V~ - SELV

24V

2P+E 16A

3P+E 16A

3P+N+E 16A

With OPTIMA [SAFE-IN] sockets

				KIOSK Series
				659.
Sockets			RCBO 0,03A	**Type BLOCK**
16A			16A	PILLAR BLOCK-OPTIMA
2P+E			2P	IP56
no.		**General**		Supply by terminal block
4	4	-	4	**659.BA5140-02**

Sockets with "SAFE-IN" safety device

								KIOSK Series		
								659.		
Sockets				MCB		RCBO 0,03A	RCD 0,03A	**Type DOMINO**		
16A				6A			25A	PILLAR DOMINO-OPTIMA METAL		PILLAR DOMINO-OPTIMA S.STEEL
2P+E	3P+N+E			1P+N	4P	2P	4P	IP66		
no.			**General**					Supply by terminal block		
2	2		DISC. 4P 63A	2			2	**659.DA5121-01**	1	**659.DB5121-01** 1
4	3	1	-		1	3		1 **659.DA5141-04**	1	**659.DB5141-04**
4	4		DISC. 4P 63A	4			4	**659.DA5141-02**	1	**659.DB5141-02** 1
8	6	2	DISC. 4P 63A	6	2		6	2 **659.DA5181-05**	1	**659.DB5181-05**
8	8		DISC. 4P 63A	8			8	**659.DA5181-03**	1	**659.DB5181-03**

Sockets with "SAFE-IN" safety device

- Upon request, versions can be built with the water kit (contact the CIT - Technical Information Centre)

Distribution assemblies

KIOSK Series

With OPTIMA [SAFE-IN] sockets

	Sockets			MCB		RCD 0,03A		KIOSK Series	
								659.	
								Type MBOX	
	16A			6A		25A		PILLAR MBOX2-OPTIMA METAL	PILLAR MBOX2-OPTIMA S.STEEL
	2P+E	3P+N+E		1P+N	4P	2P	4P	IP66	
no.			**General**					Supply by terminal block	
2	2		DISC. 4P 63A	2		2		**659.MA5121-01**	**659.MB5121-01**
4	3	1	-	3	1	3	1	**659.MA5141-04**	**659.MB5141-04**
4	4		DISC. 4P 63A	4		4		**659.MA5141-02**	**659.MB5141-02**

Sockets with "SAFE-IN" safety device

- Upon request, versions can be built with the water kit (contact the CIT - Technical Information Centre)

	Sockets			RCBO 0,03A		KIOSK Series
						659.
						Type SMART-C
	16A			6A		PILLAR SMART C - OPTIMA
	2P+E	3P+N+E		2P	4P	IP56
no.			**General**			Supply by terminal block
2	2		DISC. 4P 40A	2		**659.SC5121-01**
4	3	1	DISC. 4P 40A	3	1	**659.SC5141-04**
4	4		DISC. 4P 40A	4		**659.SC5141-02**

Sockets with "SAFE-IN" safety device

- Upon request, versions can be built with the water kit (contact the CIT - Technical Information Centre)

2P+E 16A

3P+N+E 16A

With OPTIMA [SAFE-IN] sockets

								KIOSK Series
								659.
	Sockets				RCBO 0,03A			**Type SMART-K**
	16A				6A		16A	PILLAR SMART K - OPTIMA
	2P+E	3P+N+E			2P	4P	2P	IP56
no.			**Kit water**	**General**				Supply by terminal block
2	2		2	DISC. 4P 40A			2	**659.SK5123-12**
2	2			DISC. 4P 40A	2			**659.SK5121-01**
4	3	1		DISC. 4P 40A	3	1		**659.SK5141-04**
4	4		4	DISC. 4P 40A	4			**659.SK5143-07**
4	4			DISC. 4P 40A	4			**659.SK5141-02**
6	6		2	DISC. 4P 40A	6			**659.SK5163-06**

Sockets with "SAFE-IN" safety device

- Upon request, versions can be built with the water kit (contact the CIT - Technical Information Centre)

				KIOSK Series
				659.
	Sockets		RCBO 0,03A	**Type SMART-X**
	16A		6A	PILLAR SMART-X - OPTIMA
	2P+E		2P	IP56
no.		**General**		Supply by terminal block
4	4	DISC. 4P 40A	4	**659.SX5140-02**

Sockets with "SAFE-IN" safety device

- Upon request, versions can be built with the water kit (contact the CIT - Technical Information Centre)

Distribution assemblies

KIOSK Series

With OMNIA [interlocked sockets]

KIOSK Series

659.

Type DOMINO

Sockets				MCB		RCBO 0,03A	RCD 0,03A		PILLAR DOMINO-OMNIA METAL		PILLAR DOMINO-OMNIA S.STEEL
16A				6A			25A		IP66		
2P+E	3P+N+E		1P	4P	2P		4P				
no.		**General**							Supply by terminal block		
2	2	DISC. 4P 63A	2			2		**659.DA5221-01**	1	**659.DB5221-01**
4	3	1 -		1	3		1	**659.DA5241-04**	1	**659.DB5241-04**
4	4	DISC. 4P 63A	4			4		**659.DA5241-02**	1	**659.DB5241-02**
8	6	2 DISC. 4P 63A	6	2		6	2	**659.DA5281-05**	1	**659.DB5281-05**
8	8	DISC. 4P 63A	8			8		**659.DA5281-03**	1	**659.DB5281-03**

- Upon request, versions can be built with the water kit (contact the CIT - Technical Information Centre)

KIOSK Series

659.

Type MBOX

Sockets			MCB		RCD 0,03A		PILLAR MBOX2-OMNIA METAL	PILLAR MBOX2-OMNIA S.STEEL
16A			6A		25A		IP66	
2P+E	3P+N+E		1P	4P	2P	4P		
no.		**General**					Supply by terminal block	
2	2	DISC. 4P 63A	2		2		**659.MA5221-01**	**659.MB5221-01**
4	3	1 -	3	1	3	1	**659.MA5241-04**	**659.MB5241-04**
4	4	DISC. 4P 63A	4		4		**659.MA5241-02**	**659.MB5241-02**

- Upon request, versions can be built with the water kit (contact the CIT - Technical Information Centre)

2P+E 16A

3P+N+E 16A

3P+N+E 125A

2P+E 32A

With OMNIA [interlocked sockets]

KIOSK Series
659.

Type SMART-C

Sockets							RCBO 0,03A				
	16A		32A	125A			6A		32A	125A	PILLAR SMART C - OMNIA
	2P+E	3P+N+E	2P+E	3P+N+E			2P	4P	2P	4P	IP56
no.					**Kit water**	**General**					Supply by terminal block
2	2					DISC. 4P 40A	2				**659.SC5221-01**
4	3	1				DISC. 4P 40A	3	1			**659.SC5241-04**
4	4					DISC. 4P 40A	4				**659.SC5241-02**
4			3	1	4	-			3	1	**659.SC5243-07**
6	6				4	DISC. 4P 40A	6				**659.SC5263-09**
6			6		4	DISC. 4P 63A			6		**659.SC5263-06**

- Upon request, versions can be built with the water kit (contact the CIT - Technical Information Centre)

KIOSK Series
659.

Type SMART-K

Sockets					RCBO 0,03A		
	16A				6A		PILLAR SMART-K - OMNIA
	2P+E	3P+N+E			2P	4P	IP56
no.			**Kit water**	**General**			Supply by terminal block
2	2			DISC. 4P 40A	2		**659.SK5221-01**
4	3	1		DISC. 4P 40A	3	1	**659.SK5241-04**
4	4		4	DISC. 4P 40A	4		**659.SK5243-08**
4	4			DISC. 4P 40A	4		**659.SK5241-02**

- Upon request, versions can be built with the water kit (contact the CIT - Technical Information Centre)

Distribution assemblies
GOMMA Series

Rubber distribution assemblies

	Sockets						MCB				DISC.
	16A						16A				
	2P+E		3P+E	3P+N+E			1P	1P+N	3P	4P	1P
no.					**General**	**Max power**					
4	1	2		1	RCD 4P 40A 0,03A	18 KW	3			1	
4			4		RCD 4P 40A 0,03A	18 KW			2		
5		5			MCB 2P 16A RCD 2P 25A 0,03A	3 KW		1			5

1 Plug IEC309 32A 3P+E
2 Plug IEC309 16A 2P+E
3 Plug IEC309 32A 3P+N+E
- 3m rubber cable H07RN-F

GOMMA Series

692.

	Sockets			MCB	RCD 0,03A	**Two-front units**	
	16A			2A	25A	DISTRIBUTION ASSEMBLY	
	2P+E			1P+N	4P	IP44	
no.		**General**	**Max power**			Supply by terminal block	
6	6	-	2,3 KW	6	2	**692.4300-305**	1
8	8	-	4 KW	8	2	**692.4300-69**	1
8	8	-	3 KW	8		**692.4300-70**	1

ITALIAN STANDARD P30 2P+E 16A
Shuttered socket CEI 23-50

2P+E 16A

3P+E 16A

3P+N+E 16A

GOMMA Series	
690.	

Portable
With cable and plug

DISTRIBUTION ASSEMBLY	
IP44	
Plug	
690.4200-301 [3]	1
690.4200-295 [1]	1
690.4200-300 [2]	1

Distribution assemblies

LV-LUX Series

Distribution assemblies

						LV-LUX Series	
						630.	
	Sockets			FUSES			
	24V			6,3A	12A	DISTRIBUTION ASSEMBLY (ACS)	
	2P			5x20mm		IP44	
no.		**General**	**Max power**			Plug	
2	2	FUSES 5x20mm 3,15A	Trafo 150 VA (230/24V)	1		**630.001**	1
2	2	FUSES 5x20mm 6,3A	Trafo 300 VA (230/24V)		1	**630.002**	1

Distribution assemblies for night-time power supply of lights indicating working areas

- A light sensor turns the lights (see p.181) on and off according to the amount of atmospheric light.
- With twilight switch
- Provided with housing mod. SCABOX complete with lifting handle.
- Plug IEC309 16A 2P+E

24V

ACS IP55 portable unit with safety and isolating transformer

						TRANSFORMER Series
						630.
	Sockets			MCB		**230/24V version**
	24V			16A	32A	DISTRIBUTION ASSEMBLY (ACS)
	2P			1P		IP55
no.		**General**	**Max power**			Plug
2	2	MCB 2P 6A	Trafo 1000 VA (230/24V)	2		**630.011** 1
2	2	MCB 2P 6A	Trafo 1500 VA (230/24V)		2	**630.012** 1

Safety transformer: SELV protection (230/24V and 230/48V).

- Rubber electric cable 2x1,5 mm² H07RN-F (length 1,5 m).
- MCB with operating time complying with D curve diagram.
- Note: the equipment must be kept outside narrow conducting spaces.
- Provided with housing mod. SCABOX complete with lifting handle.
- Plug IEC309 16A 2P+E

TRANSFORMER Series
ACS IP55 panel board provided with both safety and insulated transformer
The power supply system is provided with a safety or fully insulated transformer that allows the use of electric equipment even in confined conductive spaces, confined spaces generally delimited by metal or conductive surfaces. Where it is possible for human contact to occur a safety or fully insulated transformer must be used. Examples of confined conductive spaces within the construction / building yard are; metal tanks, metal pipe systems, damp underground channels, excavations and scaffolding.

ACS IP55 portable unit with safety and isolating transformer

						TRANSFORMER Series	
						630.	
	Sockets			MCB		**230/48V version**	
	48V			10A	16A	DISTRIBUTION ASSEMBLY (ACS)	
	2P			1P		IP55	
no.		**General**	**Max power**			Plug	
2	2	MCB 2P 10A	Trafo 1500 VA (230/48V)		2	**630.022**	1
2	2	MCB 2P 6A	Trafo 1000 VA (230/48V)	2		**630.021**	1

Safety transformer: SELV protection (230/24V and 230/48V).

- Rubber electric cable 2x1,5 mm² H07RN-F (length 1,5 m).
- MCB with operating time complying with D curve diagram.
- Note: the equipment must be kept outside narrow conducting spaces.
- Provided with housing mod. SCABOX complete with lifting handle.
- Plug IEC309 16A 2P+E

48V

2P+E 16A

ACS IP55 portable unit with safety and isolating transformer

	Sockets			MCB		TRANSFORMER Series
						630.
	16A			6A	10A	DISTRIBUTION ASSEMBLY (ACS)
	2P+E			1P		IP55
no.		**General**	**Max power**			Plug
1	1	MCB 2P 10A	Trafo 2000 VA (230/220V)		1	**630.032** 1
1	1	MCB 2P 6A	Trafo 1000 VA (230/220V)	1		**630.031** 1

230/230V version

Isolating transformer: electric shielding protection (230/230V).

- Rubber electric cable 2x1,5 mm² H07RN-F (length 1,5 m).
- MCB with operating time complying with D curve diagram.
- Note: the equipment must be kept outside narrow conducting spaces.
- Provided with housing mod. SCABOX complete with lifting handle.
- Plug IEC309 16A 2P+E

Distribution assemblies

MOBIL Series

ACS IP55 distribution boxes with foldable stand

	Sockets							MCB		MOBIL Series 670.	
	16A			32A				16A		Portable With cable and appliance inlet	
	2P+E	3P+E	3P+N+E	3P+E	3P+N+E			1P	3P	DISTRIBUTION ASSEMBLY (ACS) IP66	
no.						**General**	**Max power**			Appliance inlet	
6	3	1	1		1	RCBO 4P 32A 0,03A	18 KW	2	2	**670.9566-458** [1]	1
6	3	1	2			RCBO 4P 32A 0,03A	18 KW	2	2	**670.9566-459** [1]	1
6	4	1	1			RCBO 4P 32A 0,03A	18 KW	2	2	**670.9566-457** [1]	1
6	4	1		1		RCBO 4P 32A 0,03A	18 KW	4	1	**670.9566-466** [1]	1
6	4		1	1		RCBO 4P 32A 0,03A	18 KW	4	1	**670.9566-456** [1]	1
6	4		1		1	RCBO 4P 32A 0,03A	18 KW	4	1	**670.9566-467** [1]	1
6	6					DISC. 4P 40A	18 KW	6		**670.9566-465** [1]	1
6	6					MCB 2P 16A RCD 2P 25A 0,03A	3 KW			**670.9566-464** [2]	1

[1] Appliance inlet IEC309 32A 3P+N+E

[2] Appliance inlet IEC309 16A 2P+E

2P+E 16A

3P+E 16A

3P+N+E 16A

3P+E 32A

3P+N+E 32A

Stop-start units - IP55

		MOTOR START UNITS Series 299.	
Description	**Version**	**Empty enclosure**	
EMPTY ENCLOSURE	WITHOUT PLUG	**299.1600-00**	1/10

- Hinged cover fixed with stainless steel screws.
- Equipped DIN Rail and cable gland.
- Enclosure made of insulating material grey colour RAL 7035.
- Mounting by brackets.

						MOTOR START UNITS Series 299.	
Description	**Version**	**Current**	**Poles**	**Volt**	**Motor power**	**Single phase stop-start unit**	
STOP-START UNIT	THERMIC	16A	2P+E	230V	2,2kW (3,0CV)	**299.1693-00**	1/10
STOP-START UNIT	THERMIC+FUSE	16A	2P+E	230V	2,2kW (3,0CV)	**299.1693-01**	1/10
STOP-START UNIT	THERMIC+FUSE	16A	2P+E	230V		**299.1600-01**	1/10

- Hinged cover fixed with stainless steel screws.
- Appliance inlet EUREKA Series IP67 (SNAP-ON couplet).
- Enclosure made of insulating material grey colour RAL 7035.
- Mounting by brackets.
- With appliance inlet and 1,2m of H07RN-F (rubber cable).
- The combination relay + thermal device is set for a current not exceeding 16A.
- Motor power calculated with, rated voltage 230/400V and cos ϕ 0,7.

Distribution assemblies

SALVAMOTORE Series

Stop-start units - IP55

						MOTOR START UNITS Series 299.
Description	**Version**	**Current**	**Poles**	**Volt**	**Motor power**	**Stop-start unit**
STOP-START UNIT	THERMIC	16A	3P+E	400V	4,8-7,7kW (6,6-10,5CV)	**299.1686-16** 1/10

- Hinged cover fixed with stainless steel screws.
- Appliance inlet EUREKA Series IP67 (SNAP-ON couplet).
- Enclosure made of insulating material grey colour RAL 7035.
- Mounting by brackets.
- With appliance inlet and 1,2m of H07RN-F (rubber cable).
- Motor power calculated with, rated voltage 230/400V and cos ϕ 0,7.

Motor cut-out - IP55

					MOTOR START UNITS Series 299.	
					Single phase stop-start unit	**Three phase stop-start unit**
Current	**Poles**	**Volt**	**Emergency current**	**Motor power**	MOTOR STARTER	
16A	2P+E	230V	1,6-2,5A	0,2-0,4kW (0,3-0,5CV)	**299.1693-02** 1/10	
16A	2P+E	230V	2,5-4,0A	0,4-0,6kW (0,5-0,9CV)	**299.1693-04** 1/10	
16A	2P+E	230V	4,0-6,3A	0,6-1,0kW (0,9-1,4CV)	**299.1693-06** 1/10	
16A	2P+E	230V	6,3-10A	1,0-1,6kW (1,4-2,2CV)	**299.1693-10** 1/10	
16A	2P+E	230V	10-16A	1,6-2,6kW (2,2-3,5CV)	**299.1693-16** 1/10	
16A	3P+E	400V	1,6-2,5A	0,7-1,2kW (1,0-1,5CV)		**299.1696-02** 1/10
16A	3P+E	400V	2,5-4,0A	1,2-1,9kW (1,5-2,5CV)		**299.1696-04** 1/10
16A	3P+E	400V	4,0-6,3A	1,9-3,0kW (2,5-4,1CV)		**299.1696-06** 1/10
16A	3P+E	400V	6,3-10A	3,0-4,8kW (4,1-6,6CV)		**299.1696-10** 1/10
16A	3P+E	400V	10-16A	4,8-7,7kW (6,6-10,5CV)		**299.1696-16** 1/10

- Hinged cover fixed with stainless steel screws.
- Appliance inlet EUREKA Series IP67 (SNAP-ON couplet).
- Enclosure made of insulating material grey colour RAL 7035.
- Mounting by brackets.
- With appliance inlet and 1,2m of H07RN-F (rubber cable).
- Motor power calculated with, rated voltage 230/400V and cos ϕ 0,7.

Accessories

			ACCESSORIES
			MP3.
Description	**Notes**	**Current**	**Fuses**
FUSE	Ø10,3X38 TYPE GG	16A	**MP36275**
	Ø13X50	6A	**MP36246**
	Ø13X50 RIT.	2A	**MP36247**
	Ø14X51 TYPE GG	32A	**MP36276**

	ENCLOSURES ACCESSORIES
	654.
	Accessories and components
Suitable for	ACCESSORIES KIT
MBOX3 MBOX5	**654.0002** 10

- The kit includes: 5x35mm² terminal block, M40 cable gland, wall mounting brackets, blank plate for 4 DIN modules.

Accessories

	ENCLOSURES ACCESSORIES
	654.
	Accessories and components
Suitable for	CABLE SUPPORT KIT
MBOX2	**654.0051** 10

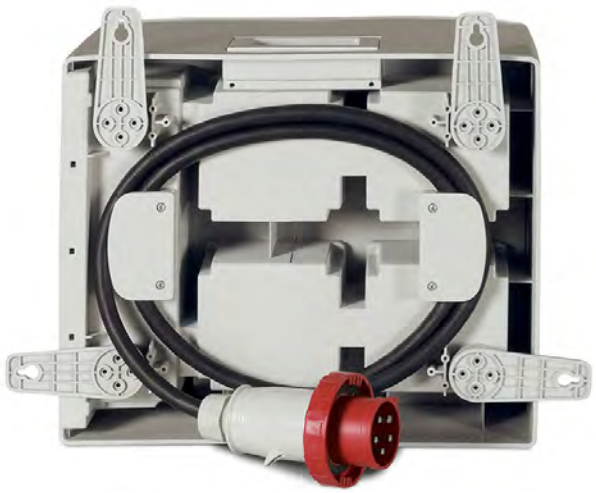

MBOX2 Series
Wall fixing brackets kit and cable support kit

Accessories

	ENCLOSURES ACCESSORIES
	654.
	Accessories and components
Suitable for	YALE KEY KIT
DOMINO IP40 MBOX (WIN)	**654.0072** 1/10

- For DIN window. Unique Yale keys, the same key opens all locks.
- For door (2 pieces).

Distribution assemblies

Accessories and spare parts

Accessories

			ENCLOSURES ACCESSORIES		MBOX2 Series	MBOX3 Series
			654.		656.	657.
Description	**Dimension**	**Suitable for**	**Fixing kit**			
SUPPORT		BLOCK4	**654.0600** 2			
	376x691x70mm	DOMINO IP66 M550 OMNIA		**654.0610** [1] 1		
STAND KIT		MBOX2			**656.0120** 1	
		MBOX3 MBOX5				**657.0121** 1

[1] Folding

BLOCK Series
Support

MOBIL Series
Support for DOMINO/OMNIA assemblies. The handy folding stand allows the panel to be transported even in limited-size motor vehicles .

Accessories

Description	MBOX2 Series 656.					
			Turret fixing			
TURRET FIXING KIT	**656.0220**	1				
MOUNTING/FIXING PLATE					**656.0222**	1
BACK CLOSING PLATE			**656.0221**	1		

MBOX Series
Pedestal application

Spare parts

	ENCLOSURES ACCESSORIES	
	654.	
		Knob kit (5 pz.)
Suitable for	KNOB KIT	
OMNIA	**654.2110** 5/10	
OMNIA (FUSE)		**654.2111**

	ENCLOSURES ACCESSORIES
	654.

Description	Notes	Din	Window for enclosures (5 pz.)
WINDOW KIT	ADVANCE 212	10 DIN	**654.0190** 10
	ADVANCE 272	13 DIN	**654.0191** 10
	BLOCK1	4 DIN	**654.0181-01** 1/10
	BLOCK3	6 DIN	**654.0181-03** 5/10
	BLOCK4	11 DIN	**654.0181-04** 5/10
	BLOCK4 + YALE		**654.0181-04Y** 5/10
	BLOCK5	14 DIN	**654.0181-05** 5/10
	DOMINO IP66	4 DIN	**654.0180-04** 10
		8 DIN	**654.0180-08** 10
		12 DIN	**654.0180-12** 10
		16 DIN	**654.0180-16** 1/10
		24 DIN	**654.0180-24**
		6 DIN	**654.0180-06** 10
	OMNIA 14DIN	14 DIN	**654.0181-07**

Spare parts >> Cover kit for socket (5 pz.)

			ADVANCE 2 Series		ADVANCE GRP Series		OMNIA Series		OPTIMA Series	
			654.							
			[ADVANCE2]		[ADVANCE-GRP]		[OMNIA]		[OPTIMA]	
			COVER							
Current	**Poles**	**Colour**	IP66/IP67							
16A	2P+E		**654.13163**				**654.11163**		**654.16163**	25
	3P+E		**654.13164**				**654.11164**		**654.16164**	
	3P+N+E		**654.13165**	5/25			**654.11165**		**654.16165**	
32A	2P+E								**654.16323**	
	3P+E		**654.13324**		**654.12324**	25	**654.11324**	5/25	**654.16324**	
	3P+N+E		**654.13325**	5/25	**654.12325**	25	**654.11325**		**654.16325**	
63A	2P+E								**654.16633**	
	3P+E		**654.13634**				**654.11634**			
	3P+N+E		**654.13635**				**654.11635**		**654.16635**	
125A	2P+E								**654.161253**	
	3P+N+E								**654.161255**	

- Suitable for sockets with thermoplastic pivot only

2.2

Industrial adaptors

ADAPTO Series

Adaptors for industrial applications

Industrial adaptors
ADAPTO Series

ONE-WAY >> One-way adaptors >> With IEC 309 industrial plug

				Sockets				ADAPTO Series			
				16A				610.			
								Italian standard socket outlets			
				2P+E				ONE-WAY ADAPTOR			
Supply	**Current**	**Poles**	**Volt**				**Notes**	IP20			
Plug IEC309 16A	16A	2P+E	250V	1		1	1 BIV.+1 P30				
Plug IEC309 16A	16A	2P+E	250V	1		2	2 BIV.+1 P30				
Plug IEC309 16A	16A	2P+E	250V	1			1 P30			**610.372** 10/100	
Plug IEC309 16A	16A	2P+E	250V		1		1 P40		**610.371** 10/100		
Plug IEC309 16A	16A	2P+E	250V			1	1 BIV.				**610.380** 10/100
Plug IEC309 16A	16A	2P+E	250V			2	2 BIV.	**610.370** 10/100			

- For temporary use only

				Sockets						ADAPTO Series	
				16A	13A	16A				610.	
										European standard socket outlets	
				2P+E						ONE-WAY ADAPTOR	
Supply	**Current**	**Poles**	**Volt**						**Notes**	IP20	
Plug IEC309 16A	10A	2P+E	250V	2					2 x SUISSE	**610.368** 10/100	
Plug IEC309 16A	13A	2P+E	250V		1				BRITISH		
Plug IEC309 16A	13A	2P+E	250V		1				BRITISH 13A		
Plug IEC309 16A	15A	2P+E	250V		1				BRITISH 15A		
Plug IEC309 16A	16A	2P+E	250V			1			GERMAN		
Plug IEC309 16A	16A	2P+E	250V				1		FRENCH		
Plug IEC309 16A	16A	2P+E	250V					1	GERMAN		**610.373** [1] 10/100

[1] Shutterless socket, subject to normative restrictions or prohibitions in Europe or in other geographical areas. Check the national laws prior to using or installing it.

- For temporary use only

ITALIAN STANDARD P30 2P+E 16A
Shuttered socket CEI 23-50

SWISS STANDARD 2P+E 10A
Unshuttered socket SEV 1011:1998

BRITISH STANDARD 2P+E 13A
Shuttered socket BS 1363-2

GERMAN STANDARD 2P+E 16A
Shuttered socket

FRENCH STANDARD 2P+E 16A
Shuttered socket

ITALIAN STANDARD P17/11 2P+E 16A
Shuttered socket CEI 23-50

PLURISTANDARD P40 2P+E 16A
Shuttered socket

ADAPTO Series

610.

Italian standard socket outlets

ONE-WAY ADAPTOR

IP20

		610.390 10/100
	610.388 10/100	
610.382 10/100		

ADAPTO Series

610.

European standard socket outlets

ONE-WAY ADAPTOR

IP20			IP54	
				610.392 10/100
	610.375 10/100			
		610.376 10/100		
			610.381 [1] 10/100	
610.374 10/100				**610.391** 10/100

Industrial adaptors
ADAPTO Series

ONE-WAY >> One-way adaptors >> With IEC 309 industrial plug

ADAPTO Series

610.

International standard socket outlets

Supply	Current	Poles	Volt					Notes	ONE-WAY ADAPTOR IP20		
Plug IEC309 16A	10A	2P+E	250V		1			1 BRASIL			
Plug IEC309 16A	10A	2P+E	250V		2			2 BRASIL		**610.395** 10/100	
Plug IEC309 16A	10A	2P+E	250V				1	NEW ZELAND			
Plug IEC309 16A	16A	2P+E	250V	1				ARGENTINIAN			**610.377** 10/100
Plug IEC309 16A	16A	2P+E	250V			1		SOUTH AFRICAN	**610.367** 10/100		

- For temporary use only

ONE-WAY >> One-way adaptors

ADAPTO Series

610.

With domestic plug

Supply	Current	Poles	Volt	Sockets 16A 2P+E	Notes	ONE-WAY ADAPTOR IP20		
Plug IEC309 16A	16A	2P+E	250V	1	FR/DE	**610.379** 10/100		
Plug 2P+E 16A IT Std	16A	2P+E	250V	1	ITALIAN S17			**610.384** 10/100
Plug 2P+E 16A D-F Std	16A	2P+E	250V	1	GERMAN		**610.383** 10/100	

- For temporary use only

ARGENTINIAN STANDARD 10A
Unshuttered socket

BRAZILIAN STANDARD 10A
Unshuttered socket ABNT NBR 14136:2002

NEW ZEALAND STANDARD 10A
Unshuttered socket AS/N25 3112

SOUTH AFRICAN STANDARD 16A
Shuttered socket SANS 164:1 (2006)

2P+E 16A

ADAPTO Series

610.

International standard socket outlets

ONE-WAY ADAPTOR

IP20		IP54	
		610.394	10/100
610.369	10/100		
610.378	10/100		

Industrial adaptors
ADAPTO Series

ONE-WAY

Supply	Current	Poles	Volt	Sockets 16A	Sockets 16A 230V 3P+E	Sockets 16A 3P+N+E	ADAPTO Series 610. ONE-WAY ADAPTOR IP44
							Phase sequence adaptors
Plug IEC309 16A	16A	3P+E	230V		1		**610.3444** 10/50
			400V	1			**610.3646** 10/50
Plug IEC309 16A		3P+N+E				1	**610.3747** 10/50

- This device reverses the sequence of phases between the power supply and the rotating machine. It must be plugged in between the rotating machine plug and the power supply socket.
- Specially useful for temporary connection to the three-phase power supply of machines such as concrete mixers, small cranes, sanders, drills, circular saws, etc.
- For temporary use only

Supply	Current	Poles	Volt	Sockets 16A	Sockets 16A 230V 3P+E	ADAPTO Series 610. ONE-WAY ADAPTOR IP44
						Current adaptors from 32A to 16A
Plug IEC309 32A	16A	3P+E	230V		1	**610.3464** 10
			400V	1		**610.3666** 10

- Used to supply 16A loads with 3P+E plugs from 32A 3P+E power supply sockets.
- The adaptor's 32A plug is first plugged into the 32A power supply socket and then the 16A plug of the load to be supplied is plugged into the adaptor's 16A socket.
- For temporary use only

3P+E 16A 230V

3P+E 16A

3P+N+E 16A

2P+E 16A

ONE-WAY

				ADAPTO Series	
				610.	
			Sockets		
			16A	**Configuration adaptors from 3P+N+E to 3P+E**	
			3P+N+E	ONE-WAY ADAPTOR	
Supply	**Current**	**Poles**	**Volt**	IP44	
Plug IEC309 16A	16A	3P+N+E	400V	1	**610.3746** 10

- Used to supply 16A loads with 3P+E plugs from 16A 3P+N+E power supply sockets.
- The adaptor's 16A 3P+N+E plug is first plugged into the 16A 3P+N+E power supply socket and then the 16A 3P+E plug of the load to be supplied is plugged into the adaptor's 16A 3P+E socket.
- For temporary use only

2-WAY

								ADAPTO Series			
								600.		601.	
				Sockets							
				16A		16A 230V	16A	**With appliance inlet**			
				2P+E		3P+E	3P+N+E	MULTI -WAY ADAPTOR			
Supply	**Current**	**Poles**	**Volt**					IP44		IP66	
Appliance inlet IEC309 16A	16A	2P+E	230V	2				**600.1623**	1/6	**601.1623**	1/6
						2		**600.1624**	1/6		
		3P+E	400V		2			**600.1626**	1/6	**601.1626**	1/6
								600.1626/I [1]	1/6		
		3P+N+E		1	1			**600.1629**	1/6	**601.1629**	1/6
							2	**600.1627**	1/6	**601.1627**	1/6

[1] One socket with reversed phases.

- 2-way adaptors
- Casing provided with lug for hanging from above (16A).

Industrial adaptors
ADAPTO Series

2-WAY

With cable and plug

Supply	Current	Poles	Volt	Sockets 16A 2P+E	Sockets 16A 3P+E	Sockets 16A 3P+N+E	Sockets 32A 3P+E	Sockets 32A 3P+N+E	Cable section	ADAPTO Series 604. MULTI -WAY ADAPTOR IP44		ADAPTO Series 605. MULTI -WAY ADAPTOR IP66	
Plug IEC309 16A	16A	2P+E	230V	2					3x2,5mm²	**604.1623/C**	1/6	**605.1623/C**	1/6
Plug IEC309 16A	16A	3P+E	230V		2				4x4mm²	**604.1626/C**	1/6	**605.1626/C**	1/6
										604.1626/I-C [1]	1/6		
Plug IEC309 16A	16A	3P+N+E	400V	1	1				5x2,5mm²	**604.1629/C**	1/6	**605.1629/C**	1/6
						2				**604.1627/C**	1/6	**605.1627/C**	1/6
Plug IEC309 32A	32A	3P+E	400V				2		4x4mm²	**604.3226/C** [2]	1/6	**605.3226/C** [2]	1/6
Plug IEC309 32A	32A	3P+N+E	400V					2	5x4mm²	**604.3227/C** [2]	1/6	**605.3227/C** [2]	1/6

[1] One socket with reversed phases.

[2] Zinc-plated steel carrying handle (32A).

- 2m rubber cable H07RN-F
- Equipped with PG21 cable gland, cable clamp and terminal block.

3-WAY

With appliance inlet

Supply	Current	Poles	Volt	Sockets 16A 110V 2P+E	Sockets 16A 2P+E	Sockets 16A 3P+E	ADAPTO Series 606. MULTI -WAY ADAPTOR IP44		IP66/IP67	
Appliance inlet IEC309 16A	16A	2P+E	230V		3		**606.3005-062**	1/6	**606.3505-062**	1/6
Appliance inlet IEC309 16A	16A	3P+E	400V			3	**606.3005-063**	1/6	**606.3505-063**	1/6
Appliance inlet IEC309 16A	16A	3P+N+E	400V		2	1	**606.3005-059**	1/6	**606.3505-059**	1/6
Appliance inlet IEC309 16A 110V	16A	2P+E	110V	3			**606.3005-479**	1/6	**606.3505-479**	1/6

2P+E 16A 110V

2P+E 16A

3P+E 16A

3P+N+E 16A

3P+E 32A

3P+N+E 32A

3-WAY

ADAPTO Series
606.

With cable and plug

Supply	Current	Poles	Volt	Sockets 16A 110V 2P+E	Sockets 16A 3P+E		Cable section	MULTI -WAY ADAPTOR IP44		MULTI -WAY ADAPTOR IP66/IP67	
					3					**606.3515-479**	1/6
Plug IEC309 16A	16A	2P+E	110V		3		3x2,5mm²			**606.3515-479**	1/6
			230V		3			**606.3015-062**	1/6	**606.3515-062**	1/6
Plug IEC309 16A		3P+E	400V			3	4x2,5mm²	**606.3015-063**	1/6	**606.3515-063**	1/6
Plug IEC309 16A		3P+N+E			2	1	5x2,5mm²	**606.3015-059**	1/6	**606.3515-059**	1/6
					3			**606.3015-740**	6		
Plug IEC309 16A 110V		2P+E	110V	3			3x2,5mm²	**606.3015-479**	1/6		

- 2m rubber cable H07RN-F
- Equipped with PG21 cable gland, cable clamp and terminal block.

3-WAY and 5-WAY

ADAPTO Series
603.

Without cable and plug
(x3)

Supply	Current	Poles	Volt	Sockets 16A 2P+E	Sockets 16A 3P+E	Sockets 16A 3P+N+E	MULTI -WAY ADAPTOR IP44		MULTI -WAY ADAPTOR IP66	
Terminal block 16mm²	16A	2P+E	230V	3			**603.3005-062**	1/10	**603.3505-062**	1/10
Terminal block 16mm²	16A	3P+E	400V		3		**603.3005-063**	1/10	**603.3505-063**	1/10
Terminal block 16mm²	16A	3P+N+E	400V	2	1		**603.3005-059**	1/10	**603.3505-059**	1/10
Terminal block 16mm²	16A	3P+N+E	400V	2		1	**603.3005-061**	1/10	**603.3505-061**	1/10
Terminal block 16mm²	16A	3P+N+E	400V			3	**603.3005-064**	1/10	**603.3505-064**	1/10

- Zinc-plated steel carrying handle.
- Equipped with PG21 cable gland, cable clamp and terminal block.

Industrial adaptors
ADAPTO Series

3-WAY and 5-WAY

ADAPTO Series

603.

Without cable and plug (x5)

Supply	Current	Poles	Volt	Sockets 16A 2P+E			16A 3P+E	16A 3P+N+E	32A 3P+N+E	MULTI -WAY ADAPTOR IP44	
Terminal block 16mm²	16A	2P+E	230V		2	3				**603.5005-358**	1/10
Terminal block 16mm²	16A	3P+N+E	400V	1	1		3			**603.5005-359**	1/10
Terminal block 16mm²	16A	3P+N+E	400V	2		1		1	1	**603.5005-427**	1/10
Terminal block 16mm²	16A	3P+N+E	400V	2		2	2			**603.5005-415**	1/10
Terminal block 16mm²	16A	3P+N+E	400V	2				3		**603.5005-360**	1/10

- Zinc-plated steel carrying handle.
- Equipped with PG21 cable gland, cable clamp and terminal block.

ADAPTO Series

602.

With cable and plug (x3)

Supply	Current	Poles	Volt	Sockets 16A 2P+E	16A 3P+E	16A 3P+N+E	32A 3P+E	32A 3P+N+E	Cable section	MULTI -WAY ADAPTOR IP44		IP66	
Plug IEC309 16A	16A	2P+E	230V	3					3x2,5mm²	**602.3005-062**	1/6	**602.3505-062**	1/6
Plug IEC309 16A	16A	3P+E	400V		3				4x2,5mm²	**602.3005-063**	1/6	**602.3505-063**	1/6
Plug IEC309 16A	16A	3P+N+E	400V	2	1				5x2,5mm²	**602.3005-059**	1/6	**602.3505-059**	1/6
Plug IEC309 16A	16A	3P+N+E	400V	2		1			5x2,5mm²	**602.3005-061**	1/6	**602.3505-061**	1/6
Plug IEC309 16A	16A	3P+N+E	400V			3			5x2,5mm²	**602.3005-064**	1/6	**602.3505-064**	1/6
Plug IEC309 32A	32A	3P+E	400V				3		4x4mm²			**602.3505-443**	1/6
Plug IEC309 32A	32A	3P+N+E	400V					3	5x4mm²	**602.3005-215**	1/6		

- Zinc-plated steel carrying handle.
- 2m rubber cable H07RN-F
- Equipped with PG21 cable gland, cable clamp and terminal block.

ITALIAN STANDARD P30 2P+E 16A
Shuttered socket CEI 23-50

ITALIAN STANDARD P17/11 2P+E 16A
Shuttered socket CEI 23-50

2P+E 16A

3P+E 16A

3P+N+E 16A

3P+E 32A

3P+N+E 32A

3-WAY and 5-WAY

ADAPTO Series

602.

With cable and plug (x5)

Supply	Current	Poles	Volt	Sockets 16A 2P+E			3P+E	3P+N+E	Cable section	MULTI -WAY ADAPTOR IP44	
Plug IEC309 16A	16A	2P+E	230V		2	3			3x2,5mm²	**602.5005-358**	1/6
Plug IEC309 16A	16A	3P+N+E	400V	1	1		3		5x2,5mm²	**602.5005-359**	1/6
Plug IEC309 16A	16A	3P+N+E	400V	2				3	5x2,5mm²	**602.5005-360**	1/6

- Zinc-plated steel carrying handle.
- 2m rubber cable H07RN-F
- Equipped with PG21 cable gland, cable clamp and terminal block.

3-WAY with protection devices >> Protection device: MCB

ADAPTO Series

623.

Without cable and plug

no.	Sockets 16A 2P+E		3P+E	General	Max power	MULTI -WAY ADAPTOR IP44 Direct supply to main switch		IP66 Direct supply to main switch	
3	1	2		MCB 2P 16A	3 KW	**623.3000-056**	1		
3		3		MCB 2P 16A	3 KW	**623.3000-062**	1	**623.3500-062**	1
3			3	MCB 3P 16A	9 KW	**623.3000-063**	1	**623.3500-063**	1

- Zinc-plated steel carrying handle.
- Equipped with PG21 cable gland, cable clamp and terminal block.

Industrial adaptors
ADAPTO Series

3-WAY with protection devices >> Protection device: MCB

					ADAPTO Series	
					625.	
	Sockets				**Elevated installation**	
	16A				MULTI -WAY ADAPTOR	
	2P+E	3P+E			IP66	
no.			**General**	**Max power**	Supply by terminal block	
3	1	2	MCB 4P 16A	9 KW	**625.3500-060**	1
3	2	1	MCB 4P 16A	9 KW	**625.3500-059**	1
3	3		MCB 2P 16A	3 KW	**625.3500-062**	1
3		3	MCB 3P 16A	9 KW	**625.3500-063**	1

- Tubular stand to be ordered separately
- Equipped with PG21 cable gland, cable clamp and terminal block.

3-WAY with protection devices >> Protection devices: MCB+RCD

					ADAPTO Series			
					623.			
	Sockets				**Without cable and plug**			
	16A				MULTI -WAY ADAPTOR			
	2P+E		3P+E		IP44		IP66	
no.				**General**	**Max power**	Direct supply to main switch		
3	1	2		MCB 2P 16A RCD 2P 25A 0,03A	3 KW	**623.3006-054**	1	
3		3		MCB 2P 16A RCD 2P 25A 0,03A	3 KW	**623.3006-062**	1	**623.3506-062**	1
3			3	RCBO 4P 16A 0,03A	9 KW	**623.3006-063**	1	**623.3506-063**	1

- Zinc-plated steel carrying handle.
- Equipped with PG21 cable gland, cable clamp and terminal block.

ITALIAN STANDARD P17/11 2P+E 16A
Shuttered socket CEI 23-50

2P+E 16A

3P+E 16A

ITALIAN STANDARD P30 2P+E 16A
Shuttered socket CEI 23-50

3P+N+E 16A

3-WAY with protection devices >> Protection devices: MCB+RCD

					ADAPTO Series	
					625.	
	Sockets				Elevated installation	
	16A				MULTI -WAY ADAPTOR	
	2P+E	3P+E			IP66	
no.			General	Max power	Supply by terminal block	
3	1	2	RCBO 4P 16A 0,03A	9 KW	**625.3506-060**	1
3	2	1	RCBO 4P 16A 0,03A	9 KW	**625.3506-059**	1
3	3		MCB 2P 16A RCD 2P 25A 0,03A	3 KW	**625.3506-062**	1

- Tubular stand to be ordered separately
- Equipped with PG21 cable gland, cable clamp and terminal block.

4-WAY

							ADAPTO Series		
							623.		
			Sockets				Without cable and plug		
			16A				MULTI -WAY ADAPTOR		
			2P+E		3P+E	3P+N+E	IP44	IP66	
Current	Poles	Volt					Terminal block 16mm²		
16A	2P+E	230V	2	2			**623.4005-010**	1	
16A	2P+E	230V			4		**623.4005-012**	1	**623.4505-012** 1
16A	3P+N+E	400V			2	2	**623.4005-003**	1	**623.4505-003** 1
16A	3P+N+E	400V			2	2	**623.4005-006**	1	**623.4505-006** 1

- Zinc-plated steel carrying handle.
- Equipped with PG21 cable gland, cable clamp and terminal block.

Industrial adaptors
ADAPTO Series

4-WAY

			ADAPTO Series	
			625.	
			Sockets	**Elevated installation**
			16A	MULTI -WAY ADAPTOR
			2P+E	3P+E	IP66
Current	**Poles**	**Volt**			Terminal block 16mm²	
16A	2P+E	230V	4		**625.4505-012**	1
16A	3P+N+E	400V	2	2	**625.4505-003**	1

- Tubular stand to be ordered separately
- Equipped with PG21 cable gland, cable clamp and terminal block.

Elevated installation
Handle and cable gland not supplied for elevated-installation versions. The cable inlet is from below, where the adaptor is fastened to the stand.

2P+E 16A

3P+E 16A

Accessories

ENCLOSURES ACCESSORIES

Description	654. Mounting bracket for compressed air		692. Tubular stand		692. Adaptors coupling kit	
PLATE FOR COMP. AIR MOSE	**654.0050**	10				
TUBULAR STAND			**692.4340**	1		
ADAPTOR COUPLING KIT					**692.4342** [1] [2]	1/5

[1] 3-way and 4-way adaptors can be coupled together as shown in the drawing

[2] The kit includes all the screws, nuts, washers and seals required to couple together 3-way and 4-way adaptors.

2.3

Industrial cable reels

- AUTOROLLER Series
  Cable reels with automatic rewind
- ROLLER 330 Series
  Cable reels for industrial, commercial and domestic applications
- ROLLER-BLOCK 330 Series
  Cable reels
- ROLLER 450 Series
  Cable reels for industrial applications
- ROLLER-BLOCK 450 Series
  Cable reels for industrial applications
- ROLLER Series
  Spare parts

Industrial cable reels
AUTOROLLER Series

Without plug and connector

							AUTOROLLER Series 751.
							With H05VV-F PVC cable
							AUTOMATIC REWIND CABLE REEL
no.	**Poles**	**Volt**	**Cable length**	**Cable section**			IP41
1	2P	250V	10m	2,5mm²	2000W	2300W	**751.0225-D** 1
			12m	1,5mm²	1500W	2100W	**751.0215-D** 1
			16m	1mm²	1100W	1400W	**751.0210-D** 1
	2P+E		8m	2,5mm²	2000W	2300W	**751.0325-D** 1
			12m	1,5mm²	1500W	2100W	**751.0315-D** 1
			14m	1mm²	1100W	1400W	**751.0310-D** 1

- Cable H05VV-F (PVC)

With plug and connector

									AUTOROLLER Series 751.
									With domestic plug and trailing socket for domestic application
	Sockets								AUTOMATIC REWIND CABLE REEL
	16A 2P+E								IP40
no.		**Current**	**Poles**	**Volt**	**Cable length**	**Cable section**			Plug 2P+E 16A IT Std
1	1	16A	2P+E	230V	12m	1,5mm²	1500W	2100W	**751.1315-D** 1

- Cable H05VV-F (PVC)

ITALIAN STANDARD P17/11 2P+E 16A
Shuttered socket CEI 23-50

Wound cable power

Unwound cable power

With plug and connector

Poles	Volt	Cable length	Cable section		AUTOROLLER Series 751.
					With portable Heavy Duty lamp
					AUTOMATIC REWIND CABLE REEL
					IP20
					Plug 2P 10A IT Std
2P	24V	16m	1mm²	60W	**751.9210** [1] 1
	230V				**751.7210-D** 1

SELV transformer 60 VA - 50 Hz

[1] Without thermal overload switch.

- Lampholder E27.
- Max. bulb 60 W.
- Protection on the transformer secondary: thermal overload switch.
- Cable H05VV-F (PVC)

Industrial cable reels
AUTOROLLER Series

With plug and connector

		HALE Series
		770.
		Lamp with protective guard and zinc-plated steel reflector
		PORTABLE LAMP
		HEAVY DUTY
Lamp holder	**Cable length**	IP20
E27	without cable	**770.250** 1/24

HD Heavy Duty products are especially suited to grevious working conditions and are also resistant to highly salty environments

- Protective guard that can be opened for light bulb replacement.
- Lighting devices with protective guard and zinc-plated steel reflector:
- Handgrip in insulating, non-hygroscopic thermoplastic material with tilting system that prevents the lamp, when placed on a flat surface, to directly irradiate said surface and thus prevent dangerous overheating.
- Tapered cable gland
- Cable gland
- Adjustable hook.
- Rocker switch and screw clamp for cable replacement.
- For lamps up to 60W (incandescent)
- Screw cable stay.
- Cable H05VV-F (PVC)

Wound cable power

With plug and connector

						AUTOROLLER Series
						756.
						With portable lamp
						AUTOMATIC REWIND CABLE REEL
						IP40
no.	**Poles**	**Volt**	**Cable length**	**Cable section**		Plug IEC309 16A
1	2P+E	230/24V	14m	1mm²	60W	**756.9211** 1

SELV transformer 60 VA - 50 Hz

- Lampholder E27.
- Max. bulb 60 W.
- Protection on the transformer secondary: thermal overload switch.
- Cable H07RN-F (RUBBER)

Industrial cable reels

ROLLER 330 Series

Cable reels for domestic and similar applications

		Sockets									
		16A				13A					
		2P+E									
Supply	**no.**						**Current**	**Poles**	**Volt**	**Cable length**	**Cable section**
Plug 2P+E 16A IT Std	1	1					16A	2P+E	230V	40m	1,5mm²
Plug 2P+E 16A IT Std	1		1				16A	2P+E	230V	40m	1,5mm²
Plug 2P+E 16A IT Std	1			1			16A	2P+E	230V	30m	1,5mm²
Plug 2P+E 16A IT Std	1			1			16A	2P+E	230V	40m	1,5mm²
Plug 2P+E 16A IT Std	4	2	2				16A	2P+E	230V	30m	2,5mm²
Plug 2P+E 16A IT Std	4	2	2				16A	2P+E	230V	40m	1,5mm²
Plug 2P+E 16A IT Std	4	3	1				16A	2P+E	230V	30m	2,5mm²
Plug 2P+E 16A IT Std	4	3	1				16A	2P+E	230V	40m	1,5mm²
Plug 2P+E 16A D-F Std	1		1				16A	2P+E	230V	40m	1,5mm²
Plug 2P+E 16A D-F Std	2				2		16A	2P+E	230V	30m	2,5mm²
Plug 2P+E 16A D-F Std	2				2		16A	2P+E	230V	40m	1,5mm²
Plug 2P+E 16A D-F Std	4		4				16A	2P+E	230V	30m	2,5mm²
Plug 2P+E 16A D-F Std	4		4				16A	2P+E	230V	40m	1,5mm²
Plug 2P+E 16A D-F Std	4				4		16A	2P+E	230V	30m	2,5mm²
Plug 2P+E 16A D-F Std	4				4		16A	2P+E	230V	40m	1,5mm²
Plug 2P+E 13A GB Std	2					2	13A	2P+E	230V	30m	2,5mm²
Plug 2P+E 13A GB Std	2					2	13A	2P+E	230V	40m	1,5mm²

- Cable H05VV-F (PVC)
- Note: Scame domestic socket outlets guarantee protection degree IP44 when the lid is closed.
- Cable reels for domestic and similar applications:
- The maximun power supply is shown on every single item.

ITALIAN STANDARD P30 2P+E 16A
Shuttered socket CEI 23-50

BRITISH STANDARD 2P+E 13A
Shuttered socket BS 1363-2

FRENCH STANDARD 2P+E 16A
Shuttered socket

ITALIAN STANDARD P17/11 2P+E 16A
Shuttered socket CEI 23-50

PLURISTANDARD P40 2P+E 16A
Shuttered socket

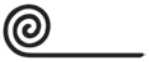

Wound cable power

Unwound cable power

		ROLLER 330 Series					
		746.					
		With 4 socket outlets		With 2 socket outlets		With 1 socket outlet	
				DOMESTIC CABLE REEL			
				IP20			
1500W	3600W					**746.4005-897**	1
1500W	3600W					**746.4005-896**	1
2000W	3600W					**746.3005-894** **746.3005-895**	1 1
1500W	3600W					**746.4005-895**	1
2000W	3600W	**746.3000-010**	1				
1500W	3600W	**746.4000-010**	1				
2000W	3600W	**746.3000-385**	1				
1500W	3600W	**746.4000-385**	1				
1500W	3600W					**746.4005-898**	1
2000W	3600W			**746.3000-388**	1		
1500W	3600W			**746.4000-388**	1		
2000W	3600W	**746.3000-384**	1				
1500W	3600W	**746.4000-384**	1				
2000W	3600W	**746.3000-349**	1				
1500W	3600W	**746.4000-349**	1				
2000W	3600W			**746.3000-389**	1		
1500W	3600W			**746.4000-389**	1		

Industrial cable reels

ROLLER 330 Series

Cable reels for industrial applications

		Sockets									
		16A									
		2P+E			3P+E	3P+N+E					
Supply	**no.**						**Current**	**Poles**	**Volt**	**Cable length**	**Cable section**
Plug IEC309 16A	1			1			16A	2P+E	230V	30m	2,5mm²
Plug IEC309 16A	2			2			16A	2P+E	230V	30m	2,5mm²
Plug IEC309 16A	3	1		2			16A	2P+E	230V	30m	2,5mm²
Plug IEC309 16A	3		1	2			16A	2P+E	230V	30m	2,5mm²
Plug IEC309 16A	1				1		16A	3P+E	400V	30m	2,5mm²
Plug IEC309 16A	2				2		16A	3P+E	400V	30m	2,5mm²
Plug IEC309 16A	1					1	16A	3P+N+E	400V	20m	2,5mm²
Plug IEC309 16A	2			1	1		16A	3P+N+E	400V	20m	2,5mm²
Plug IEC309 16A	2					2	16A	3P+N+E	400V	20m	2,5mm²
Plug IEC309 16A	3	1		1	1		16A	3P+N+E	400V	20m	2,5mm²
Plug IEC309 16A	3	1			2		16A	3P+N+E	400V	20m	2,5mm²
Plug IEC309 16A	3		1			2	16A	3P+N+E	400V	20m	2,5mm²
Plug IEC309 16A	3		2		2		16A	3P+N+E	400V	20m	2,5mm²

- Fully wired, ready to use.
- Cable H07RN-F (RUBBER)
- Note: Scame domestic socket outlets guarantee protection degree IP44 when the lid is closed.
- Cable reels for industrial applications:
- The maximun power supply is shown on every single item.

ITALIAN STANDARD P30 2P+E 16A
Shuttered socket CEI 23-50

ITALIAN STANDARD P17/11 2P+E 16A
Shuttered socket CEI 23-50

2P+E 16A

3P+E 16A

3P+N+E 16A

Wound cable power

Unwound cable power

		ROLLER 330 Series							
		746.							
		With 1 interlocked switch socket outlet		With 2 socket outlets				With 2 IEC309 socket outlets and 1 domestic socket outlet	
		INDUSTRIAL CABLE REEL							
		IP55		IP44		IP55		IP20	
1800W	3600W	**746.3512-350**	1						
1800W	3600W			**746.3010-077**	1	**746.3510-077**	1		
1800W	3600W							**746.3010-054**	1
1800W	3600W							**746.3010-056**	1
4500W	11000W	**746.3512-351**	1						
4500W	11000W			**746.3010-091**	1	**746.3510-091**	1		
5000W	11000W	**746.2512-352**	1						
5000W	11000W			**746.2010-075**	1	**746.2510-075**	1		
5000W	11000W			**746.2010-093**	1	**746.2510-093**	1		
5000W	11000W							**746.2010-052**	1
5000W	11000W							**746.2010-101**	1
5000W	11000W							**746.2010-102**	1
5000W	11000W							**746.2010-390**	1

Industrial cable reels

ROLLER-BLOCK 330 Series

Cable reels

		Sockets									
		16A									
		2P+E	3P+E	3P+N+E							
Supply	**no.**				**Current**	**Poles**	**Volt**	**Cable length**	**Cable section**		
Plug IEC309 16A	1	1			16A	2P+E	230V	30m	2,5mm²	1800W	3600W
Plug IEC309 16A	1		1		16A	3P+E	400V	30m	2,5mm²	4500W	11000W
Plug IEC309 16A	1			1	16A	3P+N+E	400V	20m	2,5mm²	5000W	11000W

- Fully wired, ready to use.
- Cable H07RN-F (RUBBER)
- Note: Scame domestic socket outlets guarantee protection degree IP44 when the lid is closed.
- Cable reels for industrial applications:
- The maximun power supply is shown on every single item.
- With standard for BLOCK4 Series distribution assemblies

2P+E 16A

3P+E 16A

3P+N+E 16A

Wound cable power

Unwound cable power

ROLLER 330 Series

746.

Cable reels with stand for BLOCK 4 Series distribution assemblies

INDUSTRIAL CABLE REEL			
IP44		IP55	
746.3025-350	1	**746.3525-350**	1
746.3025-351	1	**746.3525-351**	1
746.2025-352	1	**746.2525-352**	1

Industrial cable reels

ROLLER 450 Series

Cable reels for industrial applications

		Sockets									
		16A		32A	16A						
		2P+E	3P+E		3P+N+E						
Supply	**no.**					**Current**	**Poles**	**Volt**	**Cable length**	**Cable section**	
Plug IEC309 16A	4	4				16A	2P+E	230V	30m	2,5mm²	1800W
Plug IEC309 16A	4	4				16A	2P+E	230V	50m	2,5mm²	1600W
Plug IEC309 16A	4		4			16A	3P+E	400V	30m	2,5mm²	4500W
Plug IEC309 16A	4		4			16A	3P+E	400V	50m	2,5mm²	4000W
Plug IEC309 16A	4	2	2			16A	3P+N+E	400V	30m	2,5mm²	5000W
Plug IEC309 16A	4	2	2			16A	3P+N+E	400V	50m	2,5mm²	4000W
Plug IEC309 16A	4	2			2	16A	3P+N+E	400V	30m	2,5mm²	5000W
Plug IEC309 16A	4	2			2	16A	3P+N+E	400V	50m	2,5mm²	4000W
Plug IEC309 16A	4	3	1			16A	3P+N+E	400V	30m	2,5mm²	5000W
Plug IEC309 16A	4	3	1			16A	3P+N+E	400V	50m	2,5mm²	4000W
Plug IEC309 16A	4	3			1	16A	3P+N+E	400V	30m	2,5mm²	5000W
Plug IEC309 16A	4	3			1	16A	3P+N+E	400V	50m	2,5mm²	4000W
Plug IEC309 16A	4				4	16A	3P+N+E	400V	30m	2,5mm²	5000W
Plug IEC309 16A	4				4	16A	3P+N+E	400V	50m	2,5mm²	4000W
Plug IEC309 32A	4			4		32A	3P+E	400V	30m	2,5mm²	7000W

- Cable H07RN-F (RUBBER)
- Cable reels for industrial applications:
- The maximun power supply is shown on every single item.

2P+E 16A

3P+E 16A

3P+N+E 16A

3P+E 32A

Wound cable power

Unwound cable power

	ROLLER 450 Series			
	745.			
	With 4 sockets			
	INDUSTRIAL CABLE REEL			
	IP44		IP55	
3600W	**745.3005-012**	1	**745.3505-012**	1
3600W	**745.5005-012**	1	**745.5505-012**	1
11000W	**745.3005-013**	1	**745.3505-013**	1
11000W	**745.5005-013**	1	**745.5505-013**	1
11000W	**745.3005-003**	1	**745.3505-003**	1
11000W	**745.5005-003**	1	**745.5505-003**	1
11000W	**745.3005-006**	1	**745.3505-006**	1
11000W	**745.5005-006**	1	**745.5505-006**	1
11000W	**745.3005-008**	1	**745.3505-008**	1
11000W	**745.5005-008**	1	**745.5505-008**	1
11000W	**745.3005-094**	1	**745.3505-094**	1
11000W	**745.5005-094**	1	**745.5505-094**	1
11000W	**745.3005-096**	1	**745.3505-096**	1
11000W	**745.5005-096**	1	**745.5505-096**	1
14000W	**745.3005-441**	1	**745.3505-441**	1

Industrial cable reels

ROLLER-BLOCK 450 Series

Cable reels for industrial applications

		Sockets									
			16A		32A	16A	32A				
		2P+E	3P+E			3P+N+E					
Supply	**no.**						**Current**	**Poles**	**Volt**	**Cable length**	**Cable section**
Plug IEC309 16A	1	1					16A	2P+E	230V	30m	2,5mm²
Plug IEC309 16A	1	1					16A	2P+E	230V	50m	2,5mm²
Plug IEC309 16A	1		1				16A	3P+E	400V	30m	2,5mm²
Plug IEC309 16A	1		1				16A	3P+E	400V	50m	2,5mm²
Plug IEC309 16A	1					1	16A	3P+N+E	400V	30m	2,5mm²
Plug IEC309 16A	1					1	16A	3P+N+E	400V	50m	2,5mm²
Plug IEC309 32A	1			1			32A	3P+E	400V	30m	4mm²
Plug IEC309 32A	1					1	32A	3P+N+E	400V	30m	4mm²

- Cable H07RN-F (RUBBER)
- Cable reels for industrial applications:
- With standard for BLOCK4 Series distribution assemblies

2P+E 16A

3P+E 16A

3P+N+E 16A

3P+E 32A

3P+N+E 32A

Wound cable power

Unwound cable power

		ROLLER 450 Series			
		749.			
		Cable reels with wheeled stand for BLOCK4 Series distribution assemblies			
		INDUSTRIAL CABLE REEL			
		IP44		IP55	
1800W	3600W	**749.3005-350**	1	**749.3505-350**	1
1600W	3600W	**749.5005-350**	1	**749.5505-350**	1
4500W	11000W	**749.3005-351**	1	**749.3505-351**	1
4000W	11000W	**749.5005-351**	1	**749.5505-351**	1
5000W	11000W	**749.3005-352**	1	**749.3505-352**	1
4000W	11000W	**749.5005-352**	1	**749.5505-352**	1
7000W	14000W	**749.3005-353**	1	**749.3505-353**	1
7000W	14000W	**749.3005-354**	1	**749.3505-354**	1

Industrial cable reels

ROLLER Series

Spare parts (ROLLER 330)

	Sockets						ROLLER 330 Series	
							746.	
		16A					**Drum**	**Socket-holder disc**
		2P+E	3P+E					
IP							DRUM FOR GENERIC USE	SOCKET-HOLDER DISC
IP20	1		1	1	5000W	11000W		**746.2010-052.P** 1
	1		2					**746.3010-054.P** 1
	2	2						**746.3000-010.P** 1 **746.4000-010.P** 1
	3	1						**746.3000-385.P** 1 **746.4000-385.P** 1
		1	2					**746.3010-056.P** 1
IP44			2					**746.3010-077.P** 1
			2					**746.3510-077.P** 1
IP55				2				**746.3510-091.P** 1
							746.0000-000 1	

ITALIAN STANDARD P30 2P+E 16A
Shuttered socket CEI 23-50

ITALIAN STANDARD P17/11 2P+E 16A
Shuttered socket CEI 23-50

2P+E 16A

3P+E 16A

Wound cable power

Unwound cable power

Spare parts (ROLLER 450)

		Sockets					ROLLER 450 Series	
							745.	
		16A						
		2P+E	3P+E				**Drum**	**Socket-holder disc**
IP	**no.**			**Cable length**			DRUM FOR GENERIC USE	SOCKET-HOLDER DISC
IP55	4	1	1	50m	5000W	11000W		**745.5505-006.P** 1 **745.5505-012.P** 1
		4		30m				**745.3505-012.P** 1
							745.0000-000 1	

ROLLER Series
Internal wiring

Disassembled

Description	Notes	ROLLER 330 Series SC9. Disassembled (ROLLER 330)	
CABLE REEL WITHOUT HOLDER DISC	OPEN DRUM ROLLER 330	**SC92063**	20
	ROLLER 330	**SC92062**	20
1 IND. SOCKET HOLDER DISC	1x(70x87mm)	**SC92082**	
1 OMNIA SOCKET HOLDER DISC	1x(136x125mm)	**SC92078**	
2 IND. SOCKET HOLDER DISC	2x(70x87mm)	**SC92080**	80
	2x(75x75mm)	**SC92074**	80
	2x(75x75mm)+1x(50x60mm)	**SC92076**	
3 DOMESTIC SOCKETS HOLDER DISC	3x(50x60mm)	**SC92070**	
4 DOMESTIC SOCKETS HOLDER DISC	4x(50x60mm)	**SC92072**	80
BLANK SOCKET HOLDER DISC 330	BLANK	**SC92068**	80

Description	Notes	ROLLER 330 Series SC9. Disassembled (ROLLER-BLOCK 330)	
CABLE REEL WITHOUT HOLDER DISC	ROLLER-BLOCK 330	**SC92064**	1
1 IND. SOCKET HOLDER DISC	1x(70x87mm)	**SC92082**	
1 OMNIA SOCKET HOLDER DISC	1x(136x125mm)	**SC92078**	
2 IND. SOCKET HOLDER DISC	2x(70x87mm)	**SC92080**	80
	2x(75x75mm)	**SC92074**	80
	2x(75x75mm)+1x(50x60mm)	**SC92076**	
3 DOMESTIC SOCKETS HOLDER DISC	3x(50x60mm)	**SC92070**	
4 DOMESTIC SOCKETS HOLDER DISC	4x(50x60mm)	**SC92072**	80
BLANK SOCKET HOLDER DISC 330	BLANK	**SC92068**	80

Disassembled

		ROLLER 450 Series
		SC9.
Description	**Notes**	**Disassembled (ROLLER 450)**
CABLE REEL WITHOUT HOLDER DISC	ROLLER 450	**SC92065** 1
1 IND. SOCKET HOLDER DISC	1x(75x75mm)	**SC92086** 1
3 IND. SOCKET HOLDER DISC	3x(70x87mm)	**SC92092** 1
4 IND. SOCKET HOLDER DISC	4x(75X75mm)	**SC92089** 1
BLANK SOCKET HOLDER DISC 450	BLANCK	**SC92088** 1
1 QUADRA SOCKET HOLDER DISC	1x(136x172mm)	**SC92094** 1
6 DOMESTIC SOCKETS HOLDER DISC	6x(50x60mm)	**SC92085** 1

		ROLLER 450 Series
		SC9.
Description	**Notes**	**Disassembled (ROLLER-BLOCK 450)**
CABLE REEL WITHOUT HOLDER DISC	ROLLER-BLOCK 450	**SC92066** 1
1 IND. SOCKET HOLDER DISC	1x(75x75mm)	**SC92086** 1
3 IND. SOCKET HOLDER DISC	3x(70x87mm)	**SC92092** 1
4 IND. SOCKET HOLDER DISC	4x(75X75mm)	**SC92089** 1
BLANK SOCKET HOLDER DISC 450	BLANCK	**SC92088** 1
1 QUADRA SOCKET HOLDER DISC	1x(136x172mm)	**SC92094** 1
6 DOMESTIC SOCKETS HOLDER DISC	6x(50x60mm)	**SC92085** 1

3

ACCESSORIES

Components and accessories
for electrical installations

3.1 Installation accessories PAG. 462
3.2 Connecting accessories PAG. 484
3.3 Conduit PAG. 498
3.4 Trunking systems PAG. 508

3.1

Installation accessories

- UNION Series
  Installation accessories
- TIES Series
  Cable ties
- FIXO Series
  Fastening accessories
- CABLO Series
  INSTALLATION Accessories
- FASTY Series
  Cable clips and insulated pins
- RAILDIN Series
  Metallic DIN rails

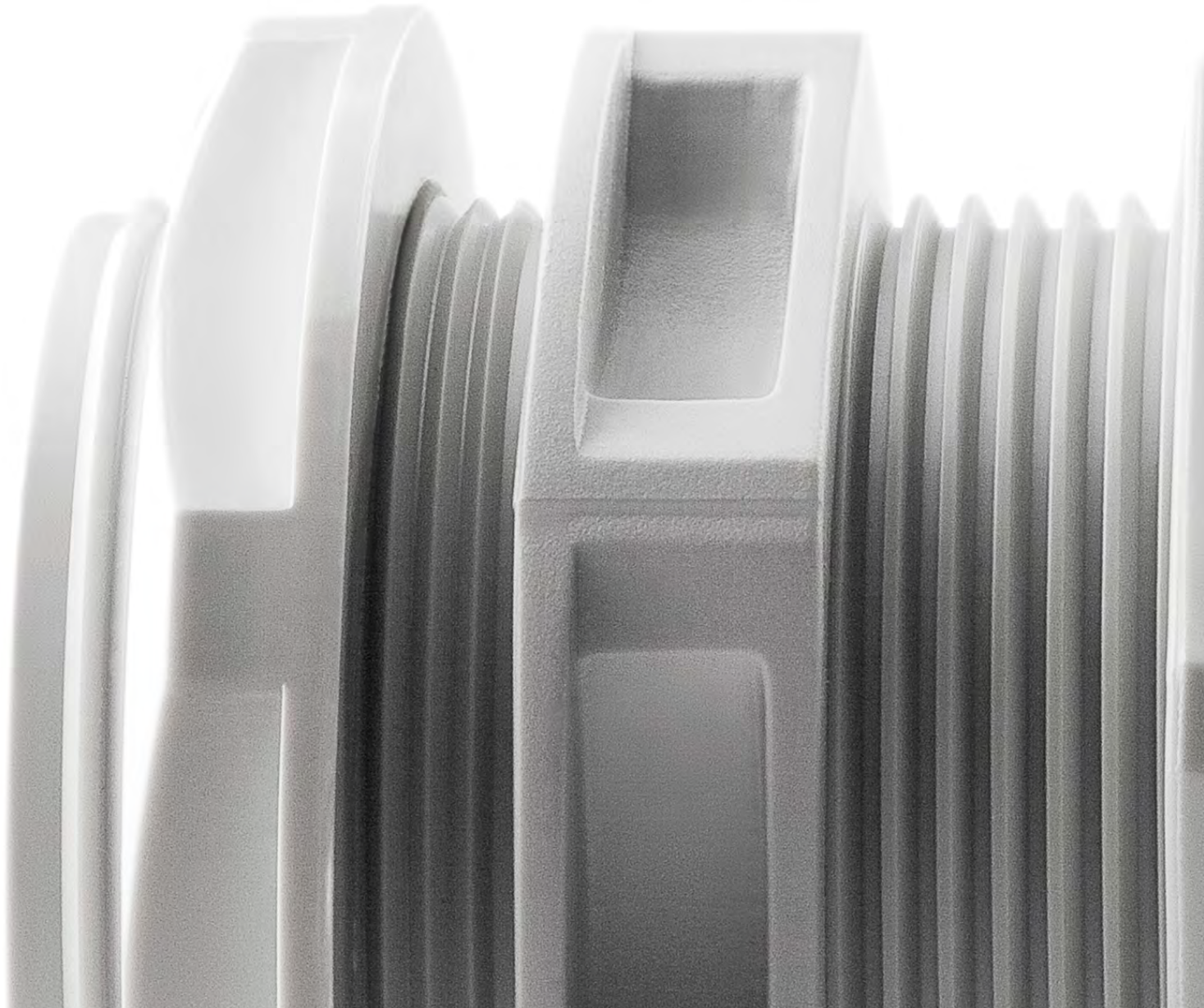

Cable glands >> Anti-tear cable glands [LIGHT] - With device preventing any unscrewing

Cable outlet	Fixing hole	Cable size	Spanner size	Thread length	Nut spanner coupler	Seal spanner coupler	UNION Series 805.	
							With nut, without diaphram - IP66	
							CABLE GLAND IP66 LIGHT	
1/4"	ø13mm	ø3-6mm	15mm	9,5mm	2,5N/m	2,5N/m	**805.7340**	50/600
3/8"	ø16mm	ø4-8mm	19mm		4N/m		**805.7341**	50/600
1/2"	ø21mm	ø7-12mm	24mm	12mm	6N/m	5N/m	**805.7343**	25/500
5/8"	ø23mm	ø10-14mm	27mm			5,5N/m	**805.7344**	25/300
3/4"	ø29mm	ø13-18mm	33mm	14mm	9N/m	7N/m	**805.7345**	25/400
1"	ø37,5mm	ø18-25mm	42mm	15mm	14N/m	10N/m	**805.7346**	25/350
1.1/8"							**805.7347**	10/140
1.1/2"	ø47,5mm	ø22-32mm	53mm	17,5mm	15N/m	12,5N/m	**805.7348**	10/140
2"	ø60mm	ø34-44mm	68mm	20mm			**805.7349**	10/100
M12X1,5	ø12mm	ø3-6mm	15mm	9,5mm	2,5N/m	2,5N/m	**805.5412**	50/600
M16X1,5	ø16mm	ø4-8mm	19mm		4N/m		**805.5416**	50/600
M20X1,5	ø20mm	ø7-12mm	24mm	12mm	6N/m	5N/m	**805.5420**	25/500
M25X1,5	ø25mm	ø13-18mm	33mm	14mm	9N/m	5,5N/m	**805.5425**	25/400
M32X1,5	ø32mm	ø18-25mm	42mm	15mm	14N/m	7N/m	**805.5432**	25/350
M40X1,5	ø40mm	ø22-32mm	53mm	17,5mm	15N/m	11,5N/m	**805.5440**	10/140
M50X1,5	ø50mm	ø30-38mm	60mm	19mm			**805.5450**	10/100
M63X1,5	ø63mm	ø34-44mm	68mm	14mm			**805.5463**	10/100
PG 7	ø13mm	ø3-6mm	15mm	9,5mm	2,5N/m	2,5N/m	**805.3340**	50/600
PG 9	ø16mm	ø4-8mm	19mm		4N/m		**805.3341**	50/600
PG 11	ø19mm	ø5-10mm	22mm	10mm	5,5N/m	5N/m	**805.3342**	25/500
PG 13.5	ø21mm	ø7-12mm	24mm	12mm	6N/m		**805.3343**	25/600
PG 16	ø23mm	ø10-14mm	27mm			5,5N/m	**805.3344**	25/300
PG 21	ø29mm	ø13-18mm	33mm	14mm	9N/m	7N/m	**805.3345**	25/400
PG 29	ø37,5mm	ø18-25mm	42mm	15mm	14N/m	10N/m	**805.3346**	25/350
PG 36	ø47,5mm	ø22-32mm	53mm	17,5mm	15N/m	12,5N/m	**805.3347**	10/140
PG 42	ø54,5mm	ø30-38mm	60mm	19mm			**805.3348**	10/100
PG 48	ø60mm	ø34-44mm	68mm	20mm			**805.3349**	10/100

- Cable glands are provided without gasket
- STANDARD version: IP66

UNION Series

805.

Without nut, without diaphram - IP66

With nut and diaphram - IP66

Without nut, with diaphram - IP66

CABLE GLAND

IP66

LIGHT

805.5412.0	50/600	**805.5412.1**	50/600	**805.5412.2**	50/600
805.5416.0	50/600	**805.5416.1**	50/600	**805.5416.2**	50/600
805.5420.0	25/500	**805.5420.1**	25/500	**805.5420.2**	25/500
805.5425.0	25/400	**805.5425.1**	25/400	**805.5425.2**	25/400
805.5432.0	25/350	**805.5432.1**	25/350	**805.5432.2**	25/350
805.5440.0	10/140	**805.5440.1**	10/140	**805.5440.2**	10/140
805.5450.0	10/100	**805.5450.1**	10/100	**805.5450.2**	10/100
805.5463.0	10/100	**805.5463.1**	10/100	**805.5463.2**	10/100
805.3340.0	50/600	**805.3340.1**	50/600	**805.3340.2**	50/600
805.3341.0	50/600	**805.3341.1**	50/600	**805.3341.2**	50/600
805.3342.0	25/500	**805.3342.1**	25/500	**805.3342.2**	25/500
805.3343.0	25/500	**805.3343.1**	25/500	**805.3343.2**	25/500
805.3344.0	25/300	**805.3344.1**	25/300	**805.3344.2**	25/300
805.3345.0	25/400	**805.3345.1**	25/400	**805.3345.2**	25/400
805.3346.0	25/350	**805.3346.1**	25/350	**805.3346.2**	25/350
805.3347.0	10/140	**805.3347.1**	10/140	**805.3347.2**	10/140
805.3348.0	10/100	**805.3348.1**	10/100	**805.3348.2**	10/100
805.3349.0	10/100	**805.3349.1**	10/100	**805.3349.2**	10/100

Cable glands >> Anti-tear cable glands [HEAVY DUTY] - With device preventing any unscrewing

							UNION Series 805.	
							With nut, without diaphram - IP68 (1bar)	
							CABLE GLAND IP68 HEAVY DUTY	
Cable outlet	**Fixing hole**	**Cable size**	**Spanner size**	**Thread length**	**Nut spanner coupler**	**Seal spanner coupler**		
1/4"	ø13mm	ø3-6mm	15mm	9,5mm	2,5N/m	2,5N/m	**805.7350**	50/600
3/8"	ø16mm	ø4-8mm	19mm		4N/m		**805.7351**	50/600
1/2"	ø21mm	ø7-12mm	24mm	12mm	6N/m	5N/m	**805.7353**	25/500
5/8"	ø23mm	ø10-14mm	27mm			5,5N/m	**805.7354**	25/300
3/4"	ø29mm	ø13-18mm	33mm	14mm	9N/m	7N/m	**805.7355**	25/400
1"	ø37,5mm	ø18-25mm	42mm	15mm	14N/m	10N/m	**805.7356**	25/350
1.1/8"							**805.7357**	10/140
1.1/2"	ø47,5mm	ø22-32mm	53mm	17,5mm	15N/m	12,5N/m	**805.7358**	10/140
2"	ø60mm	ø34-44mm	68mm	20mm			**805.7359**	10/100
M12X1,5	ø12mm	ø3-6mm	15mm	9,5mm	2,5N/m	2,5N/m	**805.5512**	50/600
M16X1,5	ø16mm	ø4-8mm	19mm		4N/m		**805.5516**	50/600
M20X1,5	ø20mm	ø7-12mm	24mm	12mm	6N/m	5N/m	**805.5520**	25/500
M25X1,5	ø25mm	ø13-18mm	33mm	14mm	9N/m	5,5N/m	**805.5525**	25/400
M32X1,5	ø32mm	ø18-25mm	42mm	15mm	14N/m	7N/m	**805.5532**	25/350
M40X1,5	ø40mm	ø22-32mm	53mm	17,5mm	15N/m	11,5N/m	**805.5540**	10/140
M50X1,5	ø50mm	ø30-38mm	60mm	19mm			**805.5550**	10/100
M63X1,5	ø63mm	ø34-44mm	68mm	14mm			**805.5563**	10/100
PG 7	ø13mm	ø3-6mm	15mm	9,5mm	2,5N/m	2,5N/m	**805.3350**	50/600
PG 9	ø16mm	ø4-8mm	19mm		4N/m		**805.3351**	50/600
PG 11	ø19mm	ø5-10mm	22mm	10mm	5,5N/m	5N/m	**805.3352**	25/500
PG 13.5	ø21mm	ø7-12mm	24mm	12mm	6N/m		**805.3353**	25/500
PG 16	ø23mm	ø10-14mm	27mm			5,5N/m	**805.3354**	25/300
PG 21	ø29mm	ø13-18mm	33mm	14mm	9N/m	7N/m	**805.3355**	25/400
PG 29	ø37,5mm	ø18-25mm	42mm	15mm	14N/m	10N/m	**805.3356**	25/350
PG 36	ø47,5mm	ø22-32mm	53mm	17,5mm	15N/m	12,5N/m	**805.3357**	10/140
PG 42	ø54,5mm	ø30-38mm	60mm	19mm			**805.3358**	10/100
PG 48	ø60mm	ø34-44mm	68mm	20mm			**805.3359**	10/100

- Fixing type A (metric HD).
- HEAVY DUTY version IP66 or IP68 (1 bar) if installed with corresponding seal.

HD
Heavy Duty

Accessories

UNION Series

805.

	Nuts [LIGHT]		Nuts [HEAVY DUTY]		Screw caps		Seals - Thermoplastic	
	LOCK NUT				SCREW CAP		GASKET	
	LIGHT		HEAVY DUTY		LIGHT			
Cable outlet								
M12X1,5	**805.5612** [2]	100/1000	**805.5712** [3]	100/1000	**805.5812** [1]	100/1000	**805.5912**	100/1000
M16X1,5	**805.5616** [2]	100/1000	**805.5716** [3]	100/1000	**805.5816** [1]	100/1000	**805.5916**	100/1000
M20X1,5	**805.5620** [2]	100/1000	**805.5720** [3]	100/1000	**805.5820** [1]	100/1000	**805.5920**	100/1000
M25X1,5	**805.5625** [2]	100/1000	**805.5725** [3]	100/1000	**805.5825** [1]	100/1000	**805.5925**	100/1000
M32X1,5	**805.5632** [2]	50/500	**805.5732** [3]	50/500	**805.5832** [1]	50/500	**805.5932**	100/1000
M40X1,5	**805.5640** [2]	50/500	**805.5740** [3]	50/500	**805.5840** [1]	25/250	**805.5940**	50/500
M50X1,5	**805.5650** [2]	50/500	**805.5750** [3]	50/500	**805.5850** [1]	25/250	**805.5950**	50/500
M63X1,5	**805.5663** [2]	50/500	**805.5763** [3]	50/500	**805.5863** [1]	25/250	**805.5963**	50/500
PG 7	**805.3360** [2]	100/1000	**805.3370** [3]	100/1000	**805.3380** [1]	100/1000	**805.3390**	100/1000
PG 9	**805.3361** [2]	100/1000	**805.3371** [3]	100/1000	**805.3381** [1]	100/1000	**805.3391**	100/1000
PG 11	**805.3362** [2]	100/1000	**805.3372** [3]	100/1000	**805.3382** [1]	100/1000	**805.3392**	100/1000
PG 13.5	**805.3363** [2]	100/1000	**805.3373** [3]	100/1000	**805.3383** [1]	100/1000	**805.3393**	100/1000
PG 16	**805.3364** [2]	100/1000	**805.3374** [3]	100/1000	**805.3384** [1]	100/1000	**805.3394**	100/1000
PG 21	**805.3365** [2]	100/1000	**805.3375** [3]	100/1000	**805.3385** [1]	100/1000	**805.3395**	100/1000
PG 29	**805.3366** [2]	50/500	**805.3376** [3]	50/500	**805.3386** [1]	50/500	**805.3396**	50/500
PG 36	**805.3367** [2]	50/500	**805.3377** [3]	50/500	**805.3387** [1]	25/250	**805.3397**	50/500
PG 42	**805.3368** [2]	50/500	**805.3378** [3]	50/500	**805.3388** [1]	25/250	**805.3398**	50/500
PG 48	**805.3369** [2]	50/500	**805.3379** [3]	50/500	**805.3389** [1]	25/250	**805.3399**	50/500

[1] Without nut.

[2] STANDARD version: IP66

[3] HEAVY DUTY version IP66 or IP68 (1 bar) if installed with corresponding seal.

Installation accessories

Couplers - IP66
With nut and seal

		UNION Series			
		805.			
		COUPLER			
		IP66			
		LIGHT		HEAVY DUTY	
Cable outlet	**Cable size**				
M25X1,5	19,6mm	**805.5225**	10/50	**805.5325**	10/50
M40X1,5	33,6mm	**805.5240**	5/25	**805.5340**	5/25
PG 16		**805.3334** [1]	10/50		
PG 21	22mm	**805.3335**	10/50		
PG 29	27,8mm	**805.3336**	10/50		
PG 36	38,7mm	**805.3337**	5/25		

[1] Only for surface mounting enclosure.

APPLICATION EXAMPLE

Cable sleeves

		UNION Series		
		805.		
		Cable sleeves (insulating perforation) - IP55 [RUBBER]	**Cable sleeves (5 circles) - IP55 [PVC]**	**Cable sleeves (5 circles) - IP55 [RUBBER]**
		CABLE SLEEVE		
		IP55		
Cable outlet	**Fixing hole**			
PG 16	23mm	**805.3324** 100/1000 **805.3324HF** [2] 100/1000	**805.3304** [1] 100/1000	**805.3314** [1] 100/1000 **805.3314HF** [1] [2] 100/1000
PG 21	29mm	**805.3325** 100/1000 **805.3325HF** [2] 100/1000	**805.3305** [1] 100/1000	**805.3315** [1] 100/1000 **805.3315HF** [1] [2] 100/1000
PG 29	39,5mm		**805.3306** [1] 50/500	
PG 36	47,5mm		**805.3307** [1] 25/200	

[1] SCABOX - CUBIK - CUBOX Series type

[2] Halogen free (Glow Wire 650°C)

Installation accessories

TIES Series

Cable ties

For indoor wiring

			TIES Series 839.			
			CABLE TIE			
Dimension	**Clamping diameter**	**Traction resistance**				
2,2x75mm	15mm	6,12Kg	**839.42080**	100/2000	**839.52080**	100/2000
2,5x135mm	32mm	8,16Kg	**839.42120**	100/2000	**839.52120**	100/2000
2,5x98mm	21mm		**839.42100**	100/2000	**839.52100**	100/2000
2,6x160mm	40mm		**839.42160**	100/2000	**839.52160**	100/2000
2,6x200mm	52mm		**839.42200**	100/2000	**839.52200**	100/2000
3,5x140mm	32mm	18,36Kg	**839.43140**	100/2000	**839.53140**	100/2000
3,5x200mm	50mm		**839.43200**	100/2000	**839.53200**	100/2000
3,5x290mm	80mm		**839.43300**	100/2000	**839.53300**	100/2000
3,5x370mm	103mm		**839.43370**	100/2000	**839.53370**	100/2000
4,5x290mm	78mm	22,44Kg	**839.44300**	100/2000	**839.54300**	100/2000
4,5x360mm	100mm		**839.44370**	100/2000	**839.54370**	100/2000
4,5x430mm	115mm		**839.44430**	100/2000	**839.54430**	100/2000
4,8x178mm	45mm		**839.44190**	100/2000	**839.54190**	100/2000
4,8x200mm	50mm		**839.44200**	100/2000	**839.54200**	100/2000
4,8x250mm	68mm		**839.44250**	100/2000	**839.54250**	100/2000
7,5x365mm	100mm	55,08Kg	**839.47370**	100/2000	**839.57370**	100/2000
7,8x180mm	45mm		**839.47200**	100/2000	**839.57200**	100/2000
7,8x300mm	80mm		**839.47290**	100/2000	**839.57290**	100/2000
9x780mm	233mm	71,4Kg	**839.47780**	100/1000	**839.57780**	100/1000

- Good resistance to external agents: oil, grease, oil derivatives, alcohol, saline mist and chlorates.
- Colour black: increased resistance to UV rays (not suited for prolonged exposure).
- Do not withstand UV rays

TIES Series
Cable ties for indoor wiring

Cable ties

	TIES Series	
	839.	

For outdoor wiring

Dimension	Clamping diameter	Traction resistance	CABLE TIE ■	
6x115mm	4÷25mm	25Kg	**839.39/6115**	100/2000
6x180mm	10÷45mm	28Kg	**839.39/6175**	100/2000
9x120mm	4÷22mm	48Kg	**839.39/9120**	100/2000
9x180mm	10÷42mm		**839.39/9180**	100/2000
9x260mm	30÷60mm	51Kg	**839.39/9260**	100/2000
9x360mm	30÷93mm		**839.39/9350**	100/2000

- Rounded edges to avoid cutting into cable insulation.
- Good resistance to external agents: oil, grease, oil derivatives and saline mist.
- Withstands UV rays.

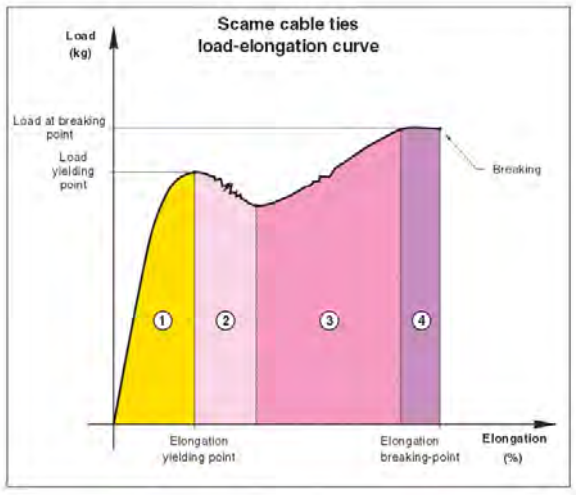

Loading diagram
SCAME cable ties load-elongation curve
4 zones with different characteristics are clearly distinguished:
1) Elastic elongation (area of use).
The cable tie is subjected to traction forces and lengthens, elastically. When the forces are taken away, the tie returns to its initial state, without any alteration of its physical characteristics.
2) Stretching of the molecular links.
The tie is subjected to such a load that some of the intermolecular links are broken. The elastic properties are altered.
3) Permanent deformity.
All the inter-molecular links are broken.
4) Breaking-point.
Length at which the tie breaks.

Cable ties

		TIES Series	
		839.	
Description	**Colour**	**Plier for cable tie clamping-trimming**	
PLIER		**839.39/104**	20

- Made of red stove-enamelled steel.

Cable ties

	TIES Series
	839.

Description	Dimension	Fastening accessories for cable ties
SELF-ADESIVE CABLE TIE BASE	28,5x28,5mm	**839.39/100** 100/1000

- Max. cable tie width: 4.8 mm.

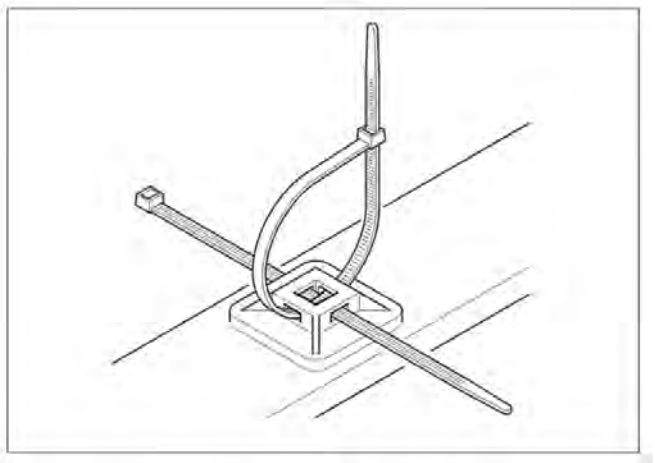

Adhesive support

Installation accessories

TIES Series

Cable ties

		TIES Series
		839.
Description	**Dimension**	**Fastening accessories for cable ties**
WALL ANCHOR BASE	7÷8mm	**839.39/101** 100/1000

		TIES Series
		839.
Description	**Dimension**	**Fastening accessories for cable ties**
PANEL CLIP-ON BASE	6,4mm max	**839.39/102** 100/1000

- Max. cable tie width: 4.8 mm.

		TIES Series
		839.
Description	**Dimension**	**Fastening accessories for cable ties**
CABLE TIE BASE ANTI-VIBRATION	15,5x22,5mm	**839.39/103** 100/1000

- Max. cable tie width: 4.8 mm.

Fastening accessories

		FIXO Series		
		845.		
Description	**Version**	**Sprung ceiling hooks**		
SPRUNG CEILING HOOK	THREADED BAR			**845.46/2** 50/500
	EYELET	**845.46** 50/500		
	SCREW		**845.46/1** 50/1000	

- To install, fold down the tabs and push them into a 12-mm hole in the ceiling. Once through, the tabs open up and are anchored in the ceiling.
- Made of metal.

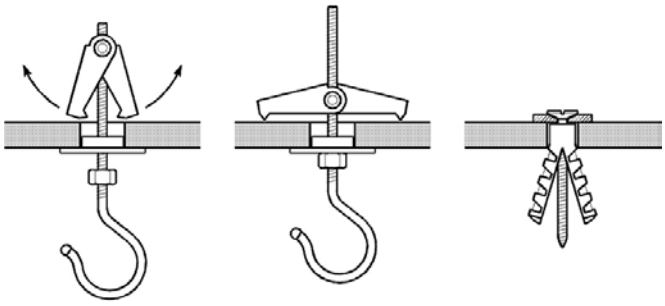

FIXO Series
Sprung hook - Fixing plug

Installation accessories

FIXO Series

Fixing plugs

	FIXO Series			
	846.			
	Fixing plugs without screws		**Fixing plugs with screws**	
	FIXING PLUG		FIXING PLUG WITH SCREW	
Dimension				
Ø4mm	**846.13-4**	100/2000	**846.14-4**	100/2000
Ø5mm	**846.13-5**	100/2000	**846.14-5**	100/2000
Ø6mm	**846.13-6**	100/2000	**846.14-6**	100/2000
Ø7mm	**846.13-7**	100/2000	**846.14-7**	100/2000
Ø8mm	**846.13-8**	100/2000	**846.14-8**	100/2000
Ø10mm	**846.13-10**	100/2000	**846.14-10**	100/2000

- Suitable for all type of screws (for wood, metal, concrete etc.)
- Stainless steel screws.

INSTALLATION Accessories

CABLO Series

865.

Cable sheaths (1 meter)

Diameter	CABLE SHEATHS			
Ø2mm			**865.002**	200/1600
Ø3mm			**865.003**	200/1000
Ø4mm			**865.004**	200/1000
Ø5mm			**865.005**	200/1000
Ø6mm	**865.106**	200/800	**865.006**	200/600
Ø7mm			**865.007**	200/600
Ø8mm			**865.008**	200/400
Ø9mm			**865.009**	200/600
Ø10mm			**865.010**	200/400
Ø12mm			**865.012**	100/200
Ø14mm			**865.014**	100/200
Ø16mm			**865.016**	100/200
Ø18mm			**865.018**	100/200
Ø20mm			**865.020**	50/150
Ø22mm			**865.022**	50/150
Ø24mm			**865.024**	50/100
Ø26mm			**865.026**	50/100
Ø28mm			**865.028**	50/150
Ø30mm			**865.030**	50/100
Ø36mm			**865.036**	25/100
Ø40mm			**865.040**	25/50

- 0.41 mm thick.
- Made of self-extinguishing, soft and flexible insulated thermoplastic material.

Installation accessories

CABLO Series

INSTALLATION Accessories

	CABLO Series	
	865.	
	Spiral cable binding (1 meter)	
	SPIRAL CABLE BINDING	
Diameter		
Ø3mm	**865.603**	25/700
Ø4mm	**865.604**	25/600
Ø6mm	**865.606**	25/500
Ø8mm	**865.608**	25/400
Ø10mm	**865.610**	25/200
Ø12mm	**865.612**	20/160
Ø14mm	**865.614**	20/120

- Made of self-extinguishing, soft and flexible insulated thermoplastic material.

Cable clips and insulated pins

	FASTY Series			
	830.			
	Flat clips			
	CLIP			
	FLAT			
Dimension				
3,5mm	**830.30/P3**	100/5000	**830.30/P3G**	100/5000
5mm	**830.30/P5**	100/3000	**830.30/P5G**	100/3000
6mm	**830.30/P6**	100/5000	**830.30/P6G**	100/5000
8mm	**830.30/P8**	100/3000	**830.30/P8G**	100/3000
11mm	**830.30/P11**	100/1000	**830.30/P11G**	100/1000
13mm	**830.30/P13**	100/1000	**830.30/P13G**	100/1000

- Pre-inserted pins
- Pins made of hardened and nickel-plated steel
- Clips made of thermoplastic material

Installation accessories

FASTY Series

Cable clips and insulated pins

	FASTY Series			
	830.			
	Round clips			
	CLIP			
	ROUND			
Ø				
ø3-4mm	**830.30/3-4**	100/5000	**830.30/3-4G**	100/5000
ø5mm	**830.30/5**	100/5000	**830.30/5G**	100/5000
ø6mm	**830.30/6**	100/5000	**830.30/6G**	100/5000
ø7mm	**830.30/7**	100/5000	**830.30/7G**	100/5000
ø8mm	**830.30/8**	100/5000	**830.30/8G**	100/5000
ø10mm	**830.30/10**	100/5000	**830.30/10G**	100/5000
ø12mm	**830.30/12**	100/3000	**830.30/12G**	100/3000
ø14mm			**830.30/14G**	100/3000
ø16mm			**830.30/16G**	100/5000
ø19mm			**830.30/19G**	100/3000
ø22mm			**830.30/22G**	100/1000
ø26mm			**830.30/26G**	100/1000
ø28mm			**830.30/28G**	100/1000
ø32mm			**830.30/32G**	100/1000

- Pre-inserted pins
- Pins made of hardened and nickel-plated steel
- Clips made of thermoplastic material

	FASTY Series
	818.
Description	**Insulated pins (100 pieces bag)**
INSULATED PIN	**818.2** 100/1000

- Pre-inserted pins
- Pins made of hardened and nickel-plated steel
- Clips made of thermoplastic material

Metallic DIN rails

		RAILDIN Series	
		865.	
Description	**Dimension**	**G type - 32x15mm (1 meter)**	
DIN RAIL	32x15x1,5mm	**865.210**	20
	35x15x1,5mm	**865.211**	20

- DIN metallic rails
- Drilled rail with slots.
- Non drilled rail with drilling points provided.
- Steel rail or mounting modular electrical equipment
- Steel, cold lamination.
- Thickness of zinc coating: 8 micron.
- Electrolytic zinc coating, followed by passivation and yellow colouring.
- Standard bar length: 2m.

		RAILDIN Series	
		865.	
Description	**Dimension**	**OMEGA type - 35x15mm (1 meter)**	
DIN RAIL	35x15x1,5mm	**865.230**	20
		865.231	20

- DIN metallic rails
- Drilled rail with slots.
- Non drilled rail with drilling points provided.
- Steel rail or mounting modular electrical equipment
- Steel, cold lamination.
- Thickness of zinc coating: 8 micron.
- Electrolytic zinc coating, followed by passivation and yellow colouring.
- Standard bar length: 2m.

Installation accessories

RAILDIN Series

Metallic DIN rails

		RAILDIN Series	
		865.	
Description	**Dimension**	**OMEGA type - 35x7.5mm (1 meter)**	
DIN RAIL	35x7,5x1mm	**865.220**	40
		865.221	40

- DIN metallic rails
- Drilled rail with slots.
- Non drilled rail with drilling points provided.
- Steel rail or mounting modular electrical equipment
- Steel, cold lamination.
- Thickness of zinc coating: 8 micron.
- Electrolytic zinc coating, followed by passivation and yellow colouring.
- Standard bar length: 2m.

		RAILDIN Series	
		865.	
		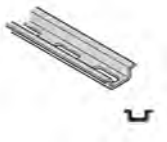	
Description	**Dimension**	**OMEGA type - 15x5.5mm (1 meter)**	
DIN RAIL	15x5,5x1mm	**865.240**	100
		865.241	100

- Electrolytic zinc coating, followed by passivation and yellow colouring.
- Standard bar length: 2m.

Metallic DIN rails

		RAILDIN Series
		865.
		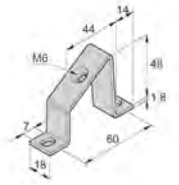
Description	**Dimension**	**Support bracket**
SUPPORT BRACKET	80x49x20mm	**865.200** 50/500

- Electrolytic zinc coating, followed by passivation and yellow colouring.

3.2

Connecting accessories

- CONNECTO Series
  Insulated wire connectors - T85
- CONNECTO Series
  Terminal strips
- CONNECTO Series
  DOMINO terminal blocks - T85

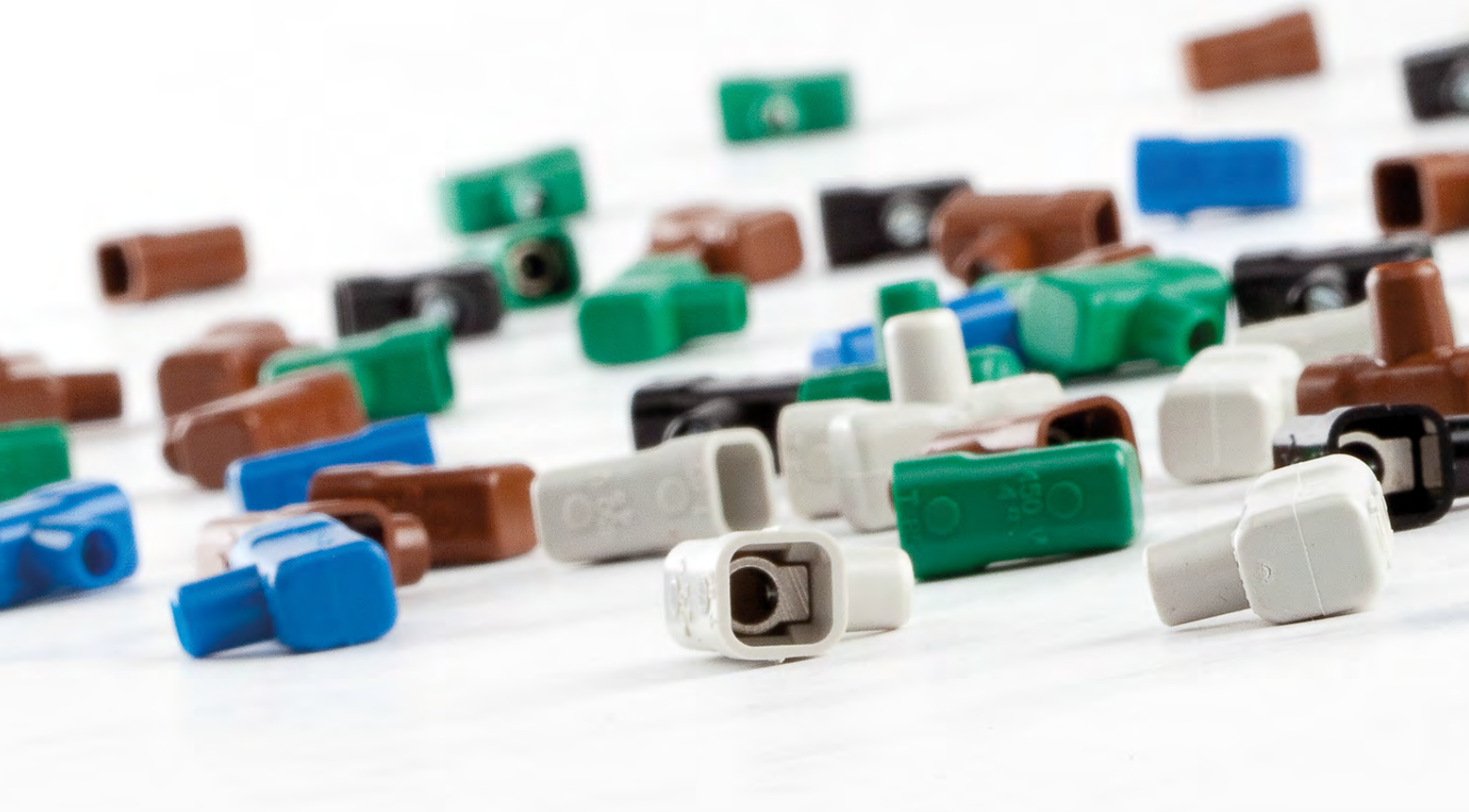

Insulated wire connectors - T85

				CONNECTO Series
				810.
				Insulated wire connectors - T85
Connecting capacity	**Current**	**Volt**	**Colour**	WIRE CONNECTOR
1,5mm²	17,5A	450V		**810.372/N** 100/600
				810.372/B 100/600
				810.372/G 100/600
				810.372/V 100/600
				810.372/M 100/600
			TRANSPARENT	**810.372/TR** 600/6000
2,5mm²	24A			**810.374/N** 100/1000
				810.374/B 100/1000
				810.374/G 100/1000
				810.374/V 100/1000
				810.374/M 100/1000
			TRANSPARENT	**810.374/TR** 1000/4000
4mm²	32A			**810.375/N** 100/1000
				810.375/B 100/1000
				810.375/G 100/1000
				810.375/V 100/1000
				810.375/M 100/1000
			TRANSPARENT	**810.375/TR** 100/1000
6mm²	41A			**810.376/N** 100/1000
				810.376/B 100/1000
				810.376/G 100/1000
				810.376/V 100/1000
				810.376/M 100/1000
			TRANSPARENT	**810.376/TR** 100/1000
10mm²	57A			**810.378/N** 100/1000
				810.378/B 100/1000
				810.378/G 100/1000
				810.378/V 100/1000
				810.378/M 100/1000
			TRANSPARENT	**810.378/TR** 100/1000
16mm²	76A			**810.379/N** 50/500
				810.379/B 50/500
				810.379/G 50/500
				810.379/V 50/500
				810.379/M 50/500
				810.379/TR 50/500
25mm²	101A		TRANSPARENT	**810.425/TR** 10/100
35mm²	125A			**810.435/TR** 5/250

Insulated wire connectors - T85

				CONNECTO Series
				810.
				Insulated wire connectors - T85 [ASSORTED]
Connecting capacity	**Current**	**Volt**	**Colour**	WIRE CONNECTOR
1,5mm²	17,5A	450V	ASSORTED	**810.372/AS** 100/600
2,5mm²	24A			**810.374/AS** 1000/4000
4mm²	32A			**810.375/AS** 100/1000
6mm²	41A			**810.376/AS** 100/1000
10mm²	57A			**810.378/AS** 100/1000
16mm²	76A			**810.379/AS** 50/500

- Transparent excluded

CONNECTO Series
SCAME's insulated wire connectors have clear or coloured che insulating casing. The clear casings provide the advance of allowing visual control of the connections,, while the coloured ones make for faster identification of the circuits.

Connecting accessories
CONNECTO Series

Insulated wire connectors - T85

				CONNECTO Series
				812.
				Insulated wire connectors - 10 poles strips (1 strip)
Connecting capacity	**Dimension**	**Pitch**	**Colour**	WIRE CONNECTOR BLOCK
1,5mm²	96mm	9,8mm	TRANSPARENT	**812.372** 10/200
2,5mm²	120mm	12,2mm		**812.374** 10/400
4mm²				**812.375** 10/400
6mm²	145mm	14,7mm		**812.376** 10/200
10mm²	168mm	17mm		**812.378** 10/150
16mm²	211mm	21,3mm		**812.379** 10/60

Multi-way wire connectors - T85

				CONNECTO Series		
				817.		
				2 WAY		
Number of ways	**Connecting capacity**	**Volt**	**Dimension**	MULTI-WAY WIRE CONNECTOR		
2 WAYS	2x6mm²	450V	23x31x24mm	**817.0602** 25/650		
	2x16mm²		33x28x24mm		**817.1602** 10/270	
	2x35mm²		35x46x30mm			**817.3502** 10/160

- Protection degree: IP20
- Cage clamp connectors.
- Rated voltage 450V~.
- Captive screws.
- Self-extinguishing material in compliance with IEC 60695-2-1 standard 850°C.
- Engineering plastic casing
- Max. service temperature - continuous duty: 85°C.

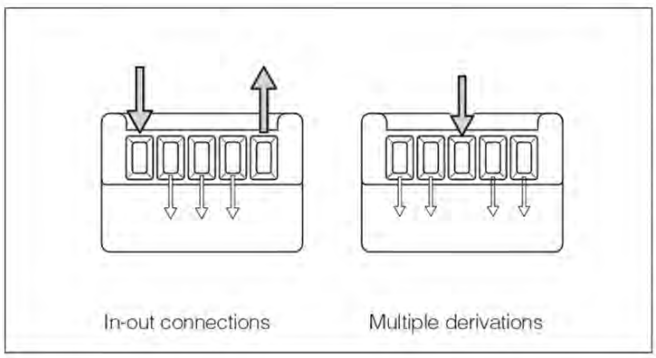

In-out connections and multiple derivations

Connecting accessories
CONNECTO Series

Multi-way wire connectors - T85

				CONNECTO Series		
				817.		
					3 WAY	
Number of ways	**Connecting capacity**	**Volt**	**Dimension**	MULTI-WAY WIRE CONNECTOR		
3 WAYS	3x6mm²	450V	31x31x24mm	**817.0603** 25/400		
	3x16mm²		45x28x24mm		**817.1603** 10/270	
	3x35mm²		49x46x30mm			**817.3503** 10/260

- Protection degree: IP20
- Cage clamp connectors.
- Rated voltage 450V~.
- Captive screws.
- Self-extinguishing material in compliance with IEC 60695-2-1 standard 850°C.
- Engineering plastic casing
- Max. service temperature - continuous duty: 85°C.

				CONNECTO Series	
				817.	
				5 WAY	
Number of ways	**Connecting capacity**	**Volt**	**Dimension**	MULTI-WAY WIRE CONNECTOR	
5 WAYS	5x6mm²	450V	49x31x24mm	**817.0605** 10/270	
	5x16mm²		71x38x24mm		**817.1605** 10/260

- Protection degree: IP20
- Cage clamp connectors.
- Rated voltage 450V~.
- Captive screws.
- Self-extinguishing material in compliance with IEC 60695-2-1 standard 850°C.
- Engineering plastic casing
- Max. service temperature - continuous duty: 85°C.

Multi-way wire connectors - T85

6 WAY

Number of ways	Connecting capacity	Volt	Dimension	MULTI-WAY WIRE CONNECTOR	
6 WAYS	4x6mm² 2x16mm²	450V	66x38x24mm	**817.1606C** 10/260	
	4x16mm² 2x35mm²		83x46x30mm		**817.3506C** 10/120

- Protection degree: IP20
- Cage clamp connectors.
- Rated voltage 450V~.
- Captive screws.
- Self-extinguishing material in compliance with IEC 60695-2-1 standard 850°C.
- Engineering plastic casing
- Max. service temperature - continuous duty: 85°C.

Derivations

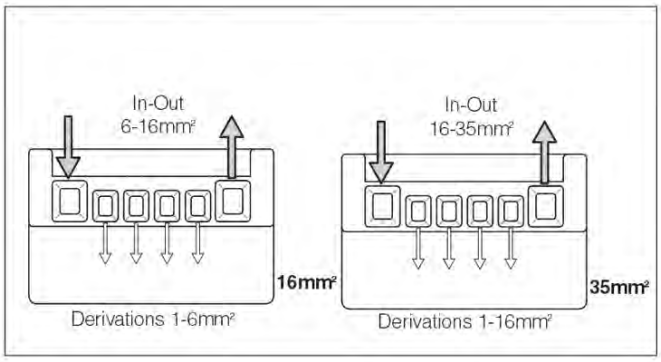

Multi-way wire connectors - T85

	CONNECTO Series
	817.
Description	**Volt**	**Accessories**
DIN RAIL BRACKET	450V	**817.001** 10/500

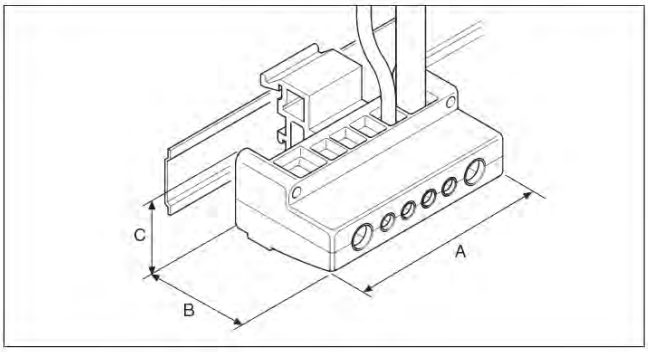

DIN rail bracket
The bracket for the DIN rail is the same for all versions of the multi-way wire connectors and is designed for spring-fixing onto the rail "OMEGA" and "G". It is detached from the rail by using a screw-driver.

Terminal strips

							CONNECTO Series 815.	
Description	**Connecting capacity**	**Volt**	**Dimension**	**Pitch**	**Ø fixing hole**	**Colour**	**T85 terminal strips**	
TERMINAL BLOCK T85	2,5mm²	250V	95,5x15,5x16mm	8mm	2,6mm		**815.2361B**	50/800
							815.2361	50/800
	4mm²	450V	120x16,6x17,4mm	10mm	3,5mm		**815.2362B**	50/400
							815.2362	50/400
	6mm²						**815.23625B**	50/400
							815.23625	50/400
	10mm²		138x23,5x20,5mm	11,5mm			**815.2363B**	25/300
							815.2363	25/300
	16mm²		174x30x24mm	14,5mm	4,3mm		**815.2364B**	25/150
							815.2364	25/150
	25mm²	750V	210x38x36mm	17,5mm			**815.2365B**	15/60
							815.2365	15/60
	35mm²		264x46x39mm	22mm	5,5mm		**815.2366B**	10/40
							815.2366	10/40

- Self-extinguishing material in compliance with IEC 60695-2-1 standard 850°C.
- Engineering plastic casing
- Max. service temperature - continuous duty: 85°C.
- Nickel-plated brass terminal
- 12 poles
- Captive screws of zinc-plated steel

Connecting accessories
CONNECTO Series

Terminal strips

							CONNECTO Series 815.	
Description	**Connecting capacity**	**Volt**	**Dimension**	**Pitch**	**Ø fixing hole**	**Colour**	**T140 terminal strips**	
TERMINAL BLOCK T140	2,5mm²	250V	95,5x15,5x16mm	8mm	2,6mm	TRANSPARENT	**815.1361**	50/800
	4mm²	450V	120x16,6x17,4mm	10mm	3,5mm		**815.1362**	50/400
	6mm²						**815.13625**	50/400
	10mm²		138x23,5x20,5mm	11,5mm			**815.1363**	25/300
	16mm²		174x30x24mm	14,5mm	4,3mm		**815.1364**	25/150
	25mm²	750V	210x38x36mm	17,5mm			**815.1365**	15/60
	35mm²		264x46x39mm	22mm	5,5mm		**815.1366**	10/40

- Max. service temperature - continuous duty: 140°C.
- Self-extinguishing material in compliance with IEC 60695-2-1 standard 850°C.
- Engineering plastic casing
- Nickel-plated brass terminal
- 12 poles
- Captive screws of zinc-plated steel

DOMINO terminal blocks - T85

			ENCLOSURES ACCESSORIES
			654.
Description	**Suitable for**	**IP**	**Terminal blocks without insulated base**
TERMINAL BLOCK	DOMINO IP40 MBOX2 MBOX3 BLOCK4	IP00	**654.0349** 10/100

- Terminals: 1x (5x10mm² and 5x16mm²).
- Earth/neutral terminal blocks

				ENCLOSURES ACCESSORIES	
				654.	
Description	**Colour**	**IP**	**Version**	**Terminal blocks for DIN rail - IP20**	
TERMINAL BLOCK		IP20	HORIZONTAL		**654.0359** 1/10
			VERTICAL	**654.0358** 1/10	

- Terminals: 1x (5x10mm² and 5x16mm²).
- Phase R-S-T and earth/neutral terminal blocks

Modular terminal blocks - IP20

					ENCLOSURES ACCESSORIES	
					654.	
Description	**Suitable for**	**Colour**	**IP**	**x1**		
TERMINAL BLOCK	DOMINO IP66 4 DIN		IP20		**654.0365** 10	
	DOMINO IP66 8 DIN			**654.0363** 1/10		

- Insulated by a plastic cover for the connection of the flexible cables
- For earth, phase and neutral conductors

Modular terminal blocks - IP20

Description	Suitable for	Colour	IP	ENCLOSURES ACCESSORIES 654. x2	
TERMINAL BLOCK	DOMINO IP40 8 DIN DOMINO IP66 12-24 DIN		IP20	**654.0361** [1]	1/10
				654.0361C [2]	10

[1] There is special left for one additional terminal block

[2] Complete terminal block, supplied with one additional terminal block art. 654.0360.

- Insulated by a plastic cover for the connection of the flexible cables
- For earth, phase and neutral conductors

Description	Suitable for	Colour	IP	ENCLOSURES ACCESSORIES 654. x3	
TERMINAL BLOCK	DOMINO IP40 12-24 DIN DOMINO IP40 18-36-54-72 DIN DOMINO IP66 16-32-48-64 DIN		IP20	**654.0362** [1]	1/10
				654.0362C [2]	10

[1] There is special left for two additional terminal blocks

[2] Complete terminal block, supplied with two additional terminal blocks art. 654.0360.

- Insulated by a plastic cover for the connection of the flexible cables
- For earth, phase and neutral conductors

Modular terminal blocks - IP20

				ENCLOSURES ACCESSORIES 654.
Description	**Suitable for**	**Colour**	**IP**	**x4**
TERMINAL BLOCK	DOMINO IP40 18-36-54-72 DIN		IP20	**654.0364** [1] 1/10 **654.0364C** [2] 10

[1] There is special left for three additional terminal blocks.
[2] Complete terminal block, supplied with three additional terminal blocks Art. 654.0360.
- Insulated by a plastic cover for the connection of the flexible cables
- For earth, phase and neutral conductors

				ENCLOSURES ACCESSORIES 654.
Description	**Notes**	**Colour**	**IP**	**Additional**
TERMINAL BLOCK	EXTRA		IP20	**654.0360** 1/10

- Insulated by a plastic cover for the connection of the flexible cables
- For earth, phase and neutral conductors

3.3

Conduit

- FIXER Series
  Conduit FIXING accessories
- TUBE Series
  COUPLING Accessories
- SMART Series
  IP66/67

Made of self-extinguishing thermoplastic material >> Clips

			FIXER Series 860.	
Description	**Colour**	**Ø**	**Snap clip**	
SNAP CLIPS		ø16mm	**860.1316/G**	100/1000
		ø20mm	**860.1320/G**	100/1000
		ø25mm	**860.1325/G**	100/800
		ø32mm	**860.1332/G**	100/800
		ø40mm	**860.1340/G**	50/400
		ø50mm	**860.1350/G**	25/250

			FIXER Series 860.	
Description	**Colour**	**Ø**	**Collar clip**	
COLLAR CLIPS		ø16mm	**860.1516**	100/1000
		ø20mm	**860.1520**	100/1000
		ø25mm	**860.1525**	100/800
		ø32mm	**860.1532**	50/500
		ø40mm	**860.1540**	50/400
		ø50mm	**860.1550**	25/250

Made of self-extinguishing thermoplastic material >> Clips

			FIXER Series	
			860.	
Description	**Colour**	**Ø**	**Snap clip with plug and screw**	
SNAP CLIPS W/PLUG & SCREW		ø16mm	**860.2016**	100/1000
		ø20mm	**860.2020**	100/1000
		ø25mm	**860.2025**	100/800
		ø32mm	**860.2032**	50/400

- Screws made of zinc-plated steel.

			FIXER Series	
			860.	
Description	**Colour**	**Ø**	**Ties**	
COLLAR CLIPS		ø13-32mm	**860.1616**	100/1000
		ø40-63mm	**860.1640**	100/500

			FIXER Series	
			860.	
Description	**Colour**	**Ø**	**Pressure clips**	
PRESSURE CLIPS		ø16-20mm	**860.01620**	100/1200
		ø25-32mm	**860.02532**	50/600
		ø40-50mm	**860.04050**	40/320

Conduit

FIXER Series

Made of zinc-bichromate steel

	FIXER Series							
	820.							
	Spacer bracket With M6 threaded base		**Half-saddle - Standard type**		**Half-saddle - Heavy Duty type**		**Saddle**	
Ø	COLLAR		CLIP				SADDLE	
ø10-11mm	**820.610**	100/1000	**820.710**	200/1000	**820.710/P**	100/1000	**820.810**	100/1000
ø12-13mm	**820.612**	100/1000	**820.712**	200/1000	**820.712/P**	100/1000	**820.813**	100/1000
ø14-15mm	**820.614**	100/1000	**820.714**	200/1000	**820.714/P**	100/1000		
ø16-17mm	**820.616**	100/1000	**820.716**	100/1000	**820.716/P**	100/1000	**820.816**	100/1000
ø19-20mm	**820.620**	100/1000	**820.720**	100/1000	**820.720/P**	100/1000	**820.819**	100/1000
ø21-22mm	**820.622**	100/1000	**820.722**	100/1000	**820.722/P**	100/1000	**820.822**	100/1000
ø25-26mm	**820.625**	100/1000	**820.725**	100/1000	**820.725/P**	100/1000	**820.826**	100/1000
ø28-29mm	**820.628**	100/1000					**820.828**	100/1000
ø31-32mm	**820.632**	100/1000			**820.732/P**	100/1000	**820.832**	100/1000
ø38-40mm	**820.640**	100/1000			**820.740/P**	100/500	**820.838**	100/1000
ø48-50mm	**820.650**	50/400			**820.750/P**	50/500	**820.850**	50/500

- Electrolytic zinc coating, followed by passivation and yellow colouring.
- Made of zinc-plated steel.

IP40 >> Inspection

			TUBE Series 860.	
			Inspection elbow	**Flat tee inspection**
IP	**Colour**	**Ø**	INSPECTION ELBOW	FLAT TEE INSPECTION
IP40		ø16mm	**860.1116/G** 50/800	**860.1216/G** 50/800
		ø20mm	**860.1120/G** 50/600	**860.1220/G** 50/400
		ø25mm	**860.1125/G** 50/400	**860.1225/G** 25/300
		ø32mm	**860.1132/G** 25/200	**860.1232/G** 20/160

IP40 >> Monobloc

			TUBE Series 862.		
			Conduit coupling	**Conduit coupling**	**Bend with two couplings**
IP	**Colour**	**Ø**	CONDUIT COUPLING		BEND WITH TWO COUPLINGS
IP40		ø16mm	**862.1016/G** 100/1200		**862.916/G** 50/800
		ø20mm	**862.1020/G** 100/800		**862.920/G** 50/400
		ø25mm	**862.1025/G** 50/600		**862.925/G** 25/200
		ø32mm	**862.1032/G** 25/300		**862.932/G** 25/150
		ø40mm	**862.1040/G** 20/160		**862.940/G** 15/60
		ø50mm	**862.1050/G** 20/120		**862.950/G** 10/40
	TRANSPARENT	ø16mm		**862.1916** 100/2000	
		ø20mm		**862.1920** 100/1200	
		ø25mm		**862.1925** 50/700	
		ø32mm		**862.1932** 25/400	
		ø40mm		**862.1940** 300	
		ø50mm		**862.1950** 150	

Conduit

TUBE Series

IP65 >> Bends

TUBE Series

864.

Flexible bend

Bend with two couplings

Conduit coupling

IP	Colour	Ø	FLEXIBLE BEND		BEND WITH TWO COUPLINGS		CONDUIT COUPLING	
IP65		ø16mm	**864.2016**	50	**864.216**	50/600	**864.316**	50/800
		ø20mm	**864.2020**	50	**864.220**	50/400	**864.320**	50/600
		ø25mm	**864.2025**	50	**864.225**	25/200	**864.325**	50/400
		ø32mm	**864.2032**	25	**864.232**	25/100	**864.332**	25/200
		ø40mm	**864.2040**	25	**864.240**	15/60	**864.340**	20/160
		ø50mm	**864.2050**	15	**864.250**	10/40	**864.350**	10/80

- The internal seal ensures IP65 protection even in the case of dilation due to temperature changes.
- Made of rigid, insulated, self-extinguishing and impact-resistant thermoplastic material.

IP65 >> Conduit to box couplings

TUBE Series

864.

Conduit to box couplings

Flexible coupling for connection rigid tube

IP	Colour	Cable outlet	Ø	CONDUIT COUPLING		FLEXIBLE BEND	
IP65		M16X1,5	ø16mm	**864.516**	50/800	**864.9016**	50
		M20X1,5	ø20mm	**864.520**	50/600	**864.9020**	50
		M25X1,5	ø25mm	**864.525**	50/400	**864.9025**	50
		M32X1,5	ø32mm	**864.532**	25/300	**864.9032**	25
		M40X1,5	ø40mm	**864.540**	25/200	**864.9040**	25
		M50X1,5	ø50mm	**864.550**	15/120	**864.9050**	15

- The internal seal ensures IP65 protection even in the case of dilation due to temperature changes.
- Supplied complete with threaded lock nut and relative seal.

IP65 >> Conduit to sheath couplings

				TUBE Series 864.			
				Conduit to sheath couplings (flex)		**Conduit to sheath couplings**	
IP	**Colour**	**Cable outlet**	**Ø**	CONDUIT COUPLING			
IP65		M12X1,5	ø16mm	**864.7016**	50/800	**864.716**	50/800
		M16X1,5		**864.8016**	50/600	**864.816**	50/600
			ø20mm	**864.7020**	50/600	**864.720**	50/600
		M20X1,5		**864.8020**	50/400	**864.820**	50/400
			ø25mm	**864.7025**	50/400	**864.725**	50/400
		M25X1,5		**864.8025**	25/200	**864.825**	25/200
			ø32mm	**864.7032**	25/200	**864.732**	25/200
		M32X1,5		**864.8032**	20/160	**864.832**	20/160
			ø40mm	**864.7040**	20/160	**864.740**	20/160
		M40X1,5		**864.8040**	15/120	**864.840**	15/120
			ø50mm	**864.7050**	15/120	**864.750**	15/120
		M50X1,5		**864.8050**	10/80	**864.850**	10/80

- The internal seal ensures IP65 protection even in the case of dilation due to temperature changes.

IP65 >> Sheath to box couplings

				TUBE Series			
				864.			
				Sheath to box couplings (with bush)		**Sheath to box couplings**	
IP	**Colour**	**Cable outlet**	**Ø**	CONDUIT COUPLING			
IP65		M16X1,5	ø10mm			**864.651**	50/1200
			ø12mm	**864.0653**	50/1200	**864.653**	50/1200
		M20X1,5	ø16mm	**864.0655**	50/800	**864.655**	50/800
		M25X1,5	ø20mm	**864.0657**	50/400	**864.657**	50/400
		M32X1,5	ø25mm	**864.0659**	25/300	**864.659**	25/300
		M40X1,5	ø32mm	**864.0661**	25/200	**864.661**	25/200
		M50X1,5	ø40mm	**864.0663**	15/120	**864.663**	15/120
		M63X1,5	ø50mm	**864.0665**	10/80	**864.665**	10/80
		PG 11	ø12mm	**864.0601**	50/1200	**864.601**	50/1200
		PG 13.5		**864.0603**	50/1200	**864.603**	50/1200
			ø16mm	**864.0605**	50/800	**864.605**	50/800
		PG 16		**864.0606**	50/800	**864.606**	50/800
		PG 21	ø20mm	**864.0607**	50/400	**864.607**	50/400
		PG 29	ø25mm	**864.0609**	25/300	**864.609**	25/300
		PG 36	ø32mm	**864.0611**	20/160	**864.611**	25/200

- Supplied complete with threaded lock nut and relative seal.

TUBE Series
Flexible joints for rigid-box tube connections

IP66/67

SMART Series

866.

Ø	Bend with two couplings		Conduit coupling		Conduit to box couplings		Conduit to sheath couplings	
	BEND WITH TWO COUPLINGS		JOINT COVER IP66/IP67		CONDUIT COUPLING		CONDUIT COUPLING IP66	
ø16mm	**866.216**	10/200	**866.316**	10/200	**866.516**	10/240	**866.816**	10/240
ø20mm	**866.220**	10/200	**866.320**	10/200	**866.520**	10/240	**866.820**	10/240
ø25mm	**866.225**	10/160	**866.325**	10/160	**866.525**	10/200	**866.825**	10/200
ø32mm	**866.232**	10/100	**866.332**	10/100	**866.532**	10/100	**866.832**	10/100
ø40mm	**866.240**	5/50	**866.340**	5/50	**866.540**	5/60	**866.840**	5/60
ø50mm	**866.250**	5/30	**866.350**	5/30	**866.550**	5/40	**866.850**	5/40

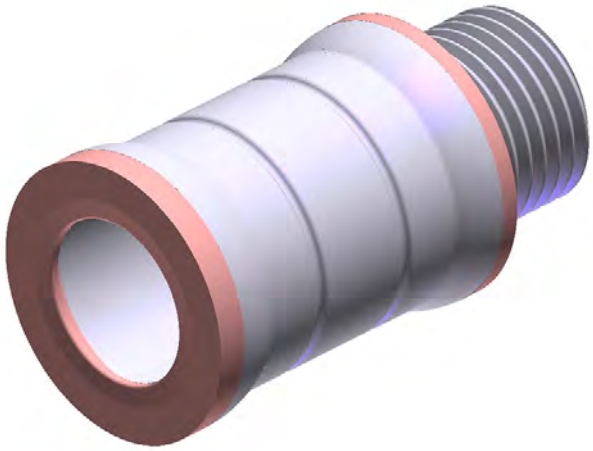

Co-injection moulded gasket
The use of a co-injection moulding system makes it possible to turn the technopolymer gasket into an extension of the piece and disguise it as part of the pipe. It also provides a greater degree of sealing efficiency and makes it easier to insert pipe fittings without squashing or deforming the gasket.

3.4

Trunking systems

- WADO Series - Mini-trunking
- WADO Series - Skirting trunking
- WADO Series - Cable and set housing trunking
- WADO Series - Slotted cable trunking
- WADO Series - Trunking for air conditioning systems

Adhesive mini-trunking

			WADO Series - Mini Trunking
			876.
Colour	Dimension	N° compt.	Equipped with hinged coverage (1 meter)
	12x12mm	1	**876.1212AD** 90
	12x7mm		**876.1207AD** 160
	16x12mm		**876.1612AD** 70

- Mounting: wall or ceiling
- Can be removed without any tool.
- Standard bar length: 2m.

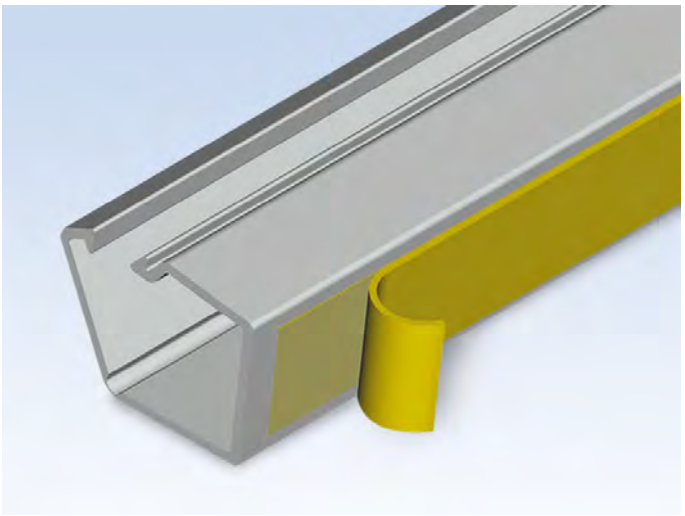

The mini-trunking base is equipped with a strip of bi-adhesive tape allowing sticking to even and clean surfaces.

LID
Hinged coverage

LID
Enveloping lid

LID
Standard lid

Mini-trunking

			WADO Series - Mini Trunking 876.			
Colour	**Dimension**	**N° compt.**	**Standard lid (1 meter)**		**Enveloping lid (1 meter)**	
	20x10mm	1	**876.2010**	80		
	20x15mm		**876.2015**	50	**876.2015AV**	50
	30x15mm		**876.3015**	60	**876.3015AV**	60
	40x10mm	2	**876.4010**	72		
	40x15mm		**876.4015**	48	**876.4015AV**	48
	40x20mm	1	**876.4021**	36		
		2	**876.4020**	36	**876.4020AV**	36
	60x20mm	3	**876.6020**	32	**876.6020AV**	32
	20x10mm	1	**876.2010G**	80		
	20x15mm		**876.2015G**	50		
	30x15mm		**876.3015G**	60		
	40x10mm	2	**876.4010G**	72		
	40x15mm		**876.4015G**	48		
	40x20mm	1	**876.4021G**	36		
		2	**876.4020G**	36		
	60x20mm	3	**876.6020G**	32		

- Standard bar length: 2m.

Accessories >> Angles

			WADO Series - Mini Trunking		
			876.		
Colour	**Dimension**	**N° compt.**	**External angle**	**Internal angle**	**Flat angle**
	20x10mm	1	**876.AE2010** 30	**876.AI2010** 30	**876.AP2010** 30
	20x15mm		**876.AE2015** 30	**876.AI2015** 30	**876.AP2015** 30
	30x15mm		**876.AE3015** 30	**876.AI3015** 30	**876.AP3015** 30
	40x10mm	2	**876.AE4010** 30	**876.AI4010** 30	**876.AP4010** 30
	40x15mm		**876.AE4015** 30	**876.AI4015** 30	**876.AP4015** 30
	40x20mm		**876.AE4020** 30	**876.AI4020** 30	**876.AP4020** 30
	60x20mm	3	**876.AE6020** 30	**876.AI6020** 30	**876.AP6020** 30
	20x10mm	1	**876.AE2010G** 30	**876.AI2010G** 30	**876.AP2010G** 30
	20x15mm		**876.AE2015G** 30	**876.AI2015G** 30	**876.AP2015G** 30
	30x15mm		**876.AE3015G** 30	**876.AI3015G** 30	**876.AP3015G** 30
	40x10mm	2	**876.AE4010G** 30	**876.AI4010G** 30	**876.AP4010G** 30
	40x15mm		**876.AE4015G** 30	**876.AI4015G** 30	**876.AP4015G** 30
	40x20mm		**876.AE4020G** 30	**876.AI4020G** 30	**876.AP4020G** 30
	60x20mm	3	**876.AE6020G** 30	**876.AI6020G** 30	**876.AP6020G** 30

Accessories >> Adaptor

			WADO Series - Mini Trunking			
			876.			
Colour	**Dimension**	**N° compt.**	**Side adaptor**		**End adaptor**	
	20x10mm	1	**876.AL2010**	30	**876.AT2010**	30
	20x15mm	1	**876.AL2015**	30	**876.AT2015**	30
	30x15mm	1	**876.AL3015**	30	**876.AT3015**	30
	40x10mm	1	**876.AL4010**	6/30		
		2			**876.AT4010**	30
	40x15mm	1	**876.AL4015**	6/30		
		2			**876.AT4015**	30
	40x20mm	1	**876.AL4020**	6/30		
		2			**876.AT4020**	30
	60x20mm	1	**876.AL6020**	6/30		
		3			**876.AT6020**	30
	20x10mm	1	**876.AL2010G**	30	**876.AT2010G**	30
	20x15mm	1	**876.AL2015G**	30	**876.AT2015G**	30
	30x15mm	1	**876.AL3015G**	30	**876.AT3015G**	30
	40x10mm	1	**876.AL4010G**	6/30		
		2			**876.AT4010G**	30
	40x15mm	1	**876.AL4015G**	6/30		
		2			**876.AT4015G**	30
	40x20mm	1	**876.AL4020G**	6/30		
		2			**876.AT4020G**	30
	60x20mm	1	**876.AL6020G**	6/30		
		3			**876.AT6020G**	30

Accessories >> Joints

			WADO Series - Mini Trunking		
			876.		
Colour	**Dimension**	**N° compt.**	**Flat tee**	**Cover joint**	**End cap**
	20x10mm	1	**876.GT2010** 30	**876.GU2010** 30	**876.TT2010** 30
	20x15mm		**876.GT2015** 30	**876.GU2015** 30	**876.TT2015** 30
	30x15mm		**876.GT3015** 30	**876.GU3015** 30	**876.TT3015** 30
	40x10mm	2	**876.GT4010** 30	**876.GU4010** 30	**876.TT4010** 30
	40x15mm		**876.GT4015** 30	**876.GU4015** 30	**876.TT4015** 30
	40x20mm		**876.GT4020** 30	**876.GU4020** 30	**876.TT4020** 30
	60x20mm	3	**876.GT6020** 30	**876.GU6020** 30	**876.TT6020** 30
	20x10mm	1	**876.GT2010G** 30	**876.GU2010G** 30	**876.TT2010G** 30
	20x15mm		**876.GT2015G** 30	**876.GU2015G** 30	**876.TT2015G** 30
	30x15mm		**876.GT3015G** 30	**876.GU3015G** 30	**876.TT3015G** 30
	40x10mm	2	**876.GT4010G** 30	**876.GU4010G** 30	**876.TT4010G** 30
	40x15mm		**876.GT4015G** 30	**876.GU4015G** 30	**876.TT4015G** 30
	40x20mm		**876.GT4020G** 30	**876.GU4020G** 30	**876.TT4020G** 30
	60x20mm	3	**876.GT6020G** 30	**876.GU6020G** 30	**876.TT6020G** 30

Accessories >> Others

				WADO Series - Mini Trunking	
				876.	
Colour	**Dimension**	**N° compt.**	**Ø**	**Connection Ø16mm**	**Cable retainer**
	20x10mm	1	ø16mm	**876.RT2010** 30	
	20x15mm			**876.RT2015** 30	
					876.TF20 30
	30x15mm				**876.TF30** 30
	40x15mm	2			**876.TF40** 30
	60x20mm	3			**876.TF60** 30
	20x10mm	1	ø16mm	**876.RT2010G** 30	
	20x15mm			**876.RT2015G** 30	

Boxes

			WADO Series - Mini Trunking	
			876.	
Colour	Dimension	Wheel-base	Box for wiring accessories	
	100x100x35mm	55mm	**876.PA5530** [1]	10
	100x100x43mm	60mm	**876.PA6040** [2]	10
	100x100x53mm		**876.PA6050** [2]	10
	142x100x43mm	83,5mm	**876.PA8040** [3]	10
	142x100x53mm		**876.PA8050** [3]	10
	100x100x35mm	55mm	**876.PA5530G** [1]	10
	100x100x43mm	60mm	**876.PA6040G** [2]	10
	100x100x53mm		**876.PA6050G** [2]	10
	142x100x43mm	83,5mm	**876.PA8040G** [3]	10
	142x100x53mm		**876.PA8050G** [3]	10

[1] Suitable for OTEO Series inserts by LEGRAND®.

[2] They consist of a base and a lid and can accommodate switch-andplug frames whose distance between centers is 60mm.

[3] They consist of a base and a lid and can accommodate switch-andplug frames whose distance between centers is 83.5mm.

- They can be mounted on all WADO series Scame mini-trunking.
- When combined to the proper end adaptor (AT) or side adaptor (AL), they allow for quick installation and complete the connection to the mini-trunking; the outcome is an elegant and attractive look, free from any imperfections.

		WADO Series - Mini Trunking	
		876.	
Colour	Wheel-base	Junction box kit	
	60mm	**876.PK60**	10
	83,5mm	**876.PK80**	10
	60mm	**876.PK60G**	10
	83,5mm	**876.PK80G**	10

- The kit includes a cover and a circuit separation accessory.
- When combined to the back box, it allows to obtain a spacious junction box.
- Snap-on fixing

Boxes

		WADO Series - Mini Trunking	
		876.	
Colour	**Dimension**	**Junction box**	
	67x67mm	**876.SA70**	10
		876.SA70G	10

- Compact box of reduced size, equipped with circuit separation accessory.
- Ideal to shunt micro raceways up to 40x20mm, it has the same characteristics of PK60 and PK80 boxes.
- Steel screw class 4.8 and yellow passivated zinc-plating ≥ 5µ.

	WADO Series - Mini Trunking	
	876.	
Colour	**Ø**	**Fixing plugs**
	ø4mm	**876.PK04** 100/1000

- Countersunk collar.
- Quick application, with only a few hammer blows.
- Hole passing through the object to be anchored.
- Polyamide body equipped with a special pre-assembled, cross-slotted nail type screw.
- Steel screw class 4.8 and yellow passivated zinc-plating ≥ 5µ.

Skirting trunking >> Skirting trunking

			WADO Series - SkirtingTrunking 879.	
Colour	**Dimension**	**N° compt.**	**80mm (1 meter)**	**120mm (1 meter)**
	80mm	3	**879.0080** 20	
	120mm	5		**879.0120** 20
	80mm	3	**879.0080M** 20	
	120mm	5		**879.0120M** 20
	80mm	3	**879.0080A** 20	
	120mm	5		**879.0120A** 20

- Standard bar length: 2m.

Skirting trunking

		WADO Series - SkirtingTrunking 879.
Colour	**Dimension**	**Floor trunking (1 meter)**
	70mm	**879.0007** 20
		879.0007G 20
		879.0007M 20
		879.0007A 20

- Resistant to aging.
- Type of installation: on the floor.
- Removable with tool.
- Voltage rating: 1000 V~.
- Shock resistance: 2J.
- Standard bar length: 2m.
- Made of rigid, insulated, self-extinguishing and impact-resistant thermoplastic material.

Accessories >> Angles

Colour	Dimension	N° compt.	WADO Series - SkirtingTrunking 879. Variable external angle		Variable internal angle		Flat angle		Variable flat angle	
	80mm	3	879.AE0080	10	879.AI0080	10	879.AP0080	10		
	120mm	5	879.AE0120	10	879.AI0120	10			879.AV0120	10
	80mm	3	879.AE0080M	10	879.AI0080M	10	879.AP0080M	10		
	120mm	5	879.AE0120M	10	879.AI0120M	10			879.AV0120M	10
	80mm	3	879.AE0080A	10	879.AI0080A	10	879.AP0080A	10		
	120mm	5	879.AE0120A	10	879.AI0120A	10			879.AV0120A	10

Accessories >> Joints

Colour	Dimension	N° compt.	WADO Series - SkirtingTrunking 879. Flat tee for mini-trunking		Flat tee for floor trunking		Flat tee		Joint cover	
	80mm	3	879.GM0080	10	879.GS0080	10	879.GT0080	10	879.GU0080	10
	120mm	5	879.GM0120	10	879.GS0120	10	879.GT0120	10	879.GU0120	10
	80mm	3	879.GM0080M	10	879.GS0080M	10	879.GT0080M	10	879.GU0080M	10
	120mm	5	879.GM0120M	10	879.GS0120M	10	879.GT0120M	10	879.GU0120M	10
	80mm	3	879.GM0080A	10	879.GS0080A	10	879.GT0080A	10	879.GU0080A	10
	120mm	5	879.GM0120A	10	879.GS0120A	10	879.GT0120A	10	879.GU0120A	10

Accessories >> Closing cap

			WADO Series - SkirtingTrunking					
			879.					
Colour	**Dimension**	**N° compt.**	**Blind closing cap**		**Closing cap - With output for 80 skirting trunking**		**Closing cap - With output for mini-trunking**	
	80mm	3	**879.CC0080**	10				
	120mm	5	**879.CC0120**	10	**879.CC0121**	10	**879.CC0122**	10
	80mm	3	**879.CC0080M**	10				
	120mm	5	**879.CC0120M**	10	**879.CC0121M**	10	**879.CC0122M**	10
	80mm	3	**879.CC0080A**	10				
	120mm	5	**879.CC0120A**	10	**879.CC0121A**	10	**879.CC0122A**	10

Accessories >> Terminal

			WADO Series - SkirtingTrunking			
			879.			
Colour	**Dimension**	**N° compt.**	**Through-wall terminal**		**End cap**	
	80mm	3	**879.TM0080**	5	**879.TT0080**	10
	120mm	5	**879.TM0120**	5	**879.TT0120**	10
	80mm	3	**879.TM0080M**	5	**879.TT0080M**	10
	120mm	5	**879.TM0120M**	5	**879.TT0120M**	10
	80mm	3	**879.TM0080A**	5	**879.TT0080A**	10
	120mm	5	**879.TM0120A**	5	**879.TT0120A**	10

Accessories

			WADO Series - SkirtingTrunking 879.	
Colour	**Dimension**	**N° compt.**	**Fittings for phone jack**	
	80mm	3	**879.TE80**	5
			879.TE80M	5
			879.TE80A	5

- For 3-module boxes

	WADO Series - SkirtingTrunking 879.	
Colour	**Cable retainer**	
	879.TF80	30

		WADO Series - SkirtingTrunking 879.	
Colour	**Dimension**	**Section cover (1 meter)**	
	80-120mm	**879.CP80**	20/200

- Standard bar length: 2m.

Box for wiring accessories

Colour	Dimension	Wheel-base	WADO Series - SkirtingTrunking 879. Horizontal - 2 modules 60-mm centres distance	
	80mm (h53mm)	60mm	**879.PA6050**	5
	120mm (h53mm)		**879.PA6051**	5
	80mm (h53mm)		**879.PA6050M**	5
	120mm (h53mm)		**879.PA6051M**	5
	80mm (h53mm)		**879.PA6050A**	5
	120mm (h53mm)		**879.PA6051A**	5

Accessories

Colour	WADO Series - SkirtingTrunking 879. Flat tee for floor trunking	
	879.GT0007	10
	879.GT0007G	10
	879.GT0007M	10
	879.GT0007A	10

Box for wiring accessories

Colour	Dimension	Wheel-base	WADO Series - SkirtingTrunking 879. Horizontal - 3 modules 83.5-mm centres distance	
	80mm (h43mm)	83,5mm	**879.PA8040**	5
	80mm (h53mm)		**879.PA8050**	5
	120mm (h53mm)		**879.PA8051**	5
	80mm (h43mm)		**879.PA8040M**	5
	80mm (h53mm)		**879.PA8050M**	5
	120mm (h53mm)		**879.PA8051M**	5
	80mm (h43mm)		**879.PA8040A**	5
	80mm (h53mm)		**879.PA8050A**	5
	120mm (h53mm)		**879.PA8051A**	5

Colour	Dimension	Wheel-base	WADO Series - SkirtingTrunking 879. Horizontal - 4 modules 108.5-mm centres distance	
	80mm (h53mm)	108,5mm	**879.PA8450**	5
	120mm (h53mm)		**879.PA8451**	5
	80mm (h53mm)		**879.PA8450M**	5
	120mm (h53mm)		**879.PA8451M**	5
	80mm (h53mm)		**879.PA8450A**	5
	120mm (h53mm)		**879.PA8451A**	5

Box for wiring accessories

Colour	Dimension	Wheel-base	WADO Series - SkirtingTrunking 879. Horizontal - 6 modules 120-mm centres distance	
	80mm (h53mm)	120mm	**879.PA9050**	5
	120mm (h53mm)		**879.PA9051**	5
	80mm (h53mm)		**879.PA9050M**	5
	120mm (h53mm)		**879.PA9051M**	5
	80mm (h53mm)		**879.PA9050A**	5
	120mm (h53mm)		**879.PA9051A**	5

Colour	Dimension	Wheel-base	WADO Series - SkirtingTrunking 879. Vertical - 3 modules 83.5-mm centres distance	
	80mm (h43mm)	83,5mm	**879.PB8040**	5
	80mm (h53mm)		**879.PB8050**	5
	80mm (h43mm)		**879.PB8040M**	5
	80mm (h53mm)		**879.PB8050M**	5
	80mm (h43mm)		**879.PB8040A**	5
	80mm (h53mm)		**879.PB8050A**	5

Box for wiring accessories

		WADO Series - SkirtingTrunking	
		879.	
Colour	**Wheel-base**	**Blank cover**	
	60mm	**879.PD60**	5/30
	83,5mm	**879.PD80**	5/30
	60mm	**879.PD60M**	5/30
	83,5mm	**879.PD80M**	5/30
	60mm	**879.PD60A**	5/30
	83,5mm	**879.PD80A**	5/30

- When combined to the back box, it allows to obtain a spacious junction box.
- Snap-on fixing

	WADO Series - Mini Trunking	
	876.	
Colour	**Ø**	**Fixing device**
	ø5mm	**876.PK05** 100/1000
	ø6mm	**876.PK06** 100/1000

- Countersunk collar.
- Quick application, with only a few hammer blows.
- Hole passing through the object to be anchored.
- Polyamide body equipped with a special pre-assembled, cross-slotted nail type screw.
- Steel screw class 4.8 and yellow passivated zinc-plating ≥ 5µ.

Cable and set housing trunking

WADO Series - Cable Trunking

872.

Colour	Dimension	N° compt.	Cable trunking (1 meter)		Cable and set housing trunking (1 meter)	
	40x40mm	1	**872.04040** [1]	60		
	60x40mm	3	**872.06040** [1]	40		
	60x60mm		**872.06060** [1]	32		
	80x60mm		**872.08060** [1]	24		
	100x60mm				**872.10060** [2]	18
	100x80mm		**872.10080** [1]	16		
	150x60mm	5			**872.15060** [2]	12
	150x80mm				**872.15080** [2]	8
	200x80mm	7			**872.20080** [2]	8

[1] This separator can be installed by means of a specific fastener for fixing components to the bottom (TE).

[2] Each bar is provided with cable fixing ties.

- Standard bar length: 2m.

Angles

WADO Series - Cable Trunking

872.

Dimension	N° compt.	External angle		Internal angle		Flat angle	
40x40mm	1	**872.AE04040**	10/60	**872.AI04040**	10/60	**872.AP04040**	10/120
60x40mm	3	**872.AE06040**	10/40	**872.AI06040**	10/60	**872.AP06040**	10/60
60x60mm		**872.AE06060**	10/40	**872.AI06060**	10/40	**872.AP06060**	10/40
80x60mm		**872.AE08060**	10/30	**872.AI08060**	10/30	**872.AP08060**	10/20
100x60mm		**872.AE10060**	8/16	**872.AI10060**	10/30	**872.AP10060**	1/20
100x80mm		**872.AE10080**	8/16	**872.AI10080**	10/20	**872.AP10080**	10/20
150x60mm	5	**872.AE15060**	1/6	**872.AI15060**	1/8	**872.AP15060**	1/12
150x80mm		**872.AE15080**	1/6	**872.AI15080**	1/6	**872.AP15080**	1/9
200x80mm	7	**872.AE20080**	1/4	**872.AI20080**	1/4	**872.AP20080**	1/6

Accessories

WADO Series - Cable Trunking

872.

Dimension	N° compt.	Joint cover		End cap	
40x40mm	1			**872.TT04040**	20
60x40mm	3			**872.TT06040**	20
60x60mm				**872.TT06060**	20
80x60mm				**872.TT08060**	20
100mm		**872.GU100**	20		
100x60mm	3			**872.TT10060**	20
100x80mm				**872.TT10080**	20
150mm		**872.GU150**	20		
150x60mm	5			**872.TT15060**	20
150x80mm				**872.TT15080**	20
200mm		**872.GU200**	20		
200x80mm	7			**872.TT20080**	20
40mm		**872.GU040**	20		
60mm		**872.GU060**	20		
80mm		**872.GU080**	20		

Joints

WADO Series - Cable Trunking

872.

Dimension	Linear joint		Flat joint		Flat tee		Variable joint	
40mm			**872.GP40**	20	**872.GT40**	20		
60mm			**872.GP60**	20	**872.GT60**	10		
80mm			**872.GP80**	20	**872.GT80**	10		
	872.GL02	10					**872.GV02** [1]	10

[1] To be installed on the trunking sides.

Switch holder and plate >> Flat connector block

WADO Series - Cable Trunking

872.

Flat connector block

Modular switches unit

Dimension	Modularity				
40mm		**872.SA40**	1/10		
60mm		**872.SA60**	1/4		
	4 DIN			**872.SC01**	1/9
	10 DIN			**872.SC02**	1/10

Switch holder and plate >> Switch holder 60mm

WADO Series - Cable Trunking

872.

Switch holder 60mm

Switch holder 60mm

Switch holder 60mm

Dimension	Wheel-base						
80mm						**872.PB080**	20
100mm						**872.PB100**	15
150mm	60mm					**872.PB150**	15
200mm						**872.PB200**	10
		872.PB02 [1]	1/30	**872.PB04** [1]	1/20		

[1] Note: for 80x60 and 100x80 versions, use the specific bottom fixing accessory.

Switch holder and plate >> Switch holder 83.5mm

WADO Series - Cable Trunking

872.

Dimension	Wheel-base	Switch holder 83,5mm		Switch holder 83,5mm	
80mm	83,5mm			**872.PA080**	20
100mm				**872.PA100**	15
150mm				**872.PA150**	15
200mm				**872.PA200**	10
		872.PA02 [1]	1/20		

[1] Note: for 80x60 and 100x80 versions, use the specific bottom fixing accessory.

Switch holder and plate >> IEC socket holder

WADO Series - Cable Trunking

872.

Dimension	IEC socket holder		IEC socket holder		6 DIN modular switch plate	
80mm			**872.PC080**	20		
100mm			**872.PC100**	15		
150mm			**872.PC150**	15	**872.PD150**	10
200mm			**872.PC200**	10	**872.PD200**	10
	872.PC02	1/30				

Supports and ties

WADO Series - Cable Trunking

872.

Dimension	Apparatus support		Home installation support tie		Collar cable fastener		Cable fastening tie	
100mm			**872.TB100**	20			**872.TF100**	20
100x60mm					**872.TC10060**	10/120		
100x80mm					**872.TC10080**	10/120		
150mm			**872.TB150**	20			**872.TF150**	20
200mm							**872.TF200**	20
60-80mm	**872.TA02**	1/10						

Complements

WADO Series - Cable Trunking

872.

Dimension	Separator (1 meter)		Wall shelf		Fasteners for fixing components to the base	
40÷100mm			**872.MP01**	20/80		
100mm					**872.TE100**	20
150÷200mm			**872.MP02**	1/20		
40mm	**872.CS40** [1]	100				
60mm	**872.CS60** [1]	72			**872.TE060**	20
80mm					**872.TE080**	20

[1] Standard bar length: 2m.

			WADO Series - Slotted Cable			
			874.			
			Short pitch [4/6/4] (1 meter)		Standard pitch [8/12/8 - 6/8/6] (1 meter)	
Dimension	**N° compt.**	**Quarry height**				
80x60mm	1	50mm	**874.R8060**	24	**874.8060**	24
100x40mm		30mm	**874.R0040**	24	**874.0040**	24
100x60mm		50mm	**874.R0060**	20	**874.0060**	20
100x80mm		68mm	**874.R0080**	16	**874.0080**	16
120x40mm		30mm	**874.R0240**	20	**874.0240**	20
120x60mm		50mm	**874.R0260**	14	**874.0260**	14
120x80mm		68mm	**874.R0280**	12	**874.0280**	12
25x30mm		23,5mm	**874.R2530**	58	**874.2530** [1]	58
25x40mm		30mm	**874.R2540**	48	**874.2540**	48
25x60mm		50mm	**874.R2560**	34	**874.2560**	34
25x80mm		68mm	**874.R2580**	28	**874.2580**	28
40x30mm		23,5mm	**874.R4030**	38	**874.4030** [1]	38
40x40mm		30mm	**874.R4040**	30	**874.4040**	30
40x60mm		50mm	**874.R4060**	22	**874.4060**	22
40x80mm		68mm	**874.R4080**	36	**874.4080**	36
60x40mm		30mm	**874.R6040**	40	**874.6040**	40
60x60mm		50mm	**874.R6060**	32	**874.6060**	32
60x80mm		68mm	**874.R6080**	24	**874.6080**	24
80x40mm		30mm	**874.R8040**	32	**874.8040**	32
80x80mm		68mm	**874.R8080**	16	**874.8080**	16

[1] For trunking h 30 pitch 6/8/6.

- Standard bar length: 2m.

PITCH
Standard pitch

PITCH
Short pitch

		WADO Series - Conditioning	
		871.	
Colour	Dimension	Trunking (1 meter)	
	60x45mm	**871.060**	24
	80x60mm	**871.080**	16
	110x75mm	**871.110**	8

- Standard bar length: 2m.

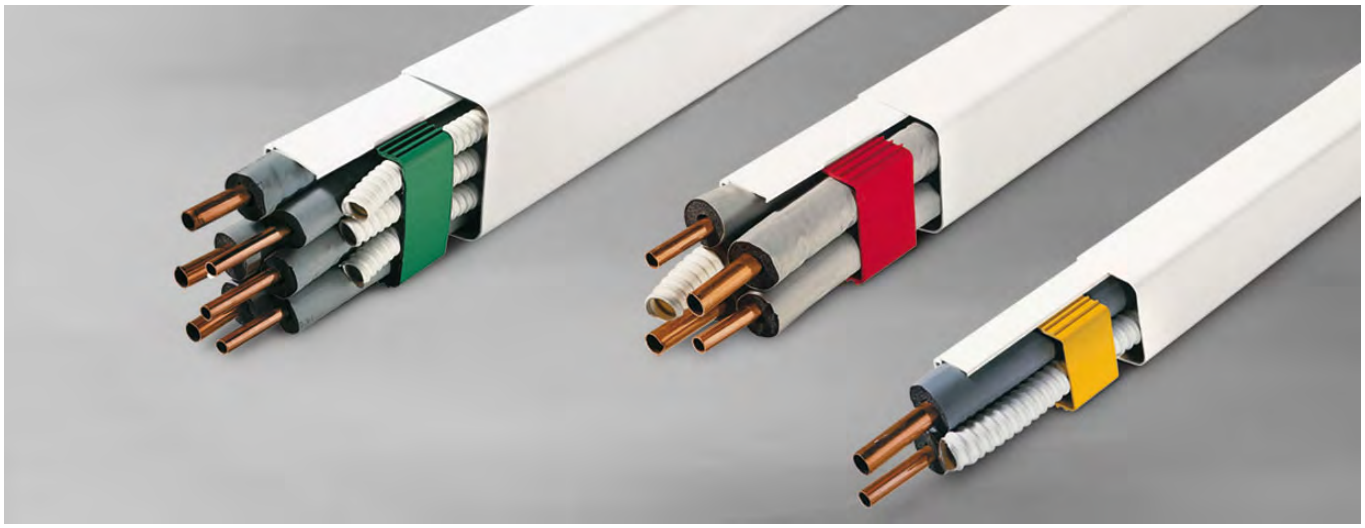

Trunking systems

WADO Series - Trunking for air conditioning systems

Angles (internal-external)

WADO Series - Conditioning

871.

Colour	Dimension	External angle		Variable external angle		Internal angle		Variable internal angle	
	60x45mm	**871.AE060**	12	**871.AEV060**	8	**871.AI060**	8	**871.AIV060**	6
	80x60mm	**871.AE080**	9	**871.AEV080**	6	**871.AI080**	6	**871.AIV080**	4
	110x75mm	**871.AE110**	6			**871.AI110**	4		

Angles (flat-vertical)

WADO Series - Conditioning

871.

Colour	Dimension	Flat angle		Variable flat angle		Vertical right angle		Vertical left angle	
	60x45mm	**871.AP060**	10	**871.APV060**	8	**871.AVD060**	6	**871.AVS060**	6
	80x60mm	**871.AP080**	8	**871.APV080**	6	**871.AVD080**	4	**871.AVS080**	4
	110x75mm	**871.AP110**	6						

Joint

WADO Series - Conditioning

871.

Colour	Dimension	Wall bend		Flexible coupling		Flat tees		Joint cover	
	60x45mm	**871.CM060**	9	**871.GF060**	6			**871.GU060**	30
	80x60mm	**871.CM080**	6	**871.GF080**	4	**871.GT080**	4	**871.GU080**	30
	110x75mm	**871.CM110**	4			**871.GT110**	2	**871.GU110**	20

Terminals

		WADO Series - Conditioning 871.			
Colour	Dimension	Through-wall terminal		End cap	
	60x45mm	**871.TM060**	10	**871.TT060**	12
	80x60mm	**871.TM080**	8	**871.TT080**	9
	110x75mm	**871.TM110**	8		

		WADO Series - Conditioning 871.	
Colour	Dimension	Tube fixing sleeper	
	80x60mm	**871.TF080**	30
	60x45mm	**871.TF060**	30
	110x75mm	**871.TF110**	20

Complements

		WADO Series - Conditioning					
		871.					
Colour	**Dimension**	**Coupling**		**Flush mounting box**		**Reduction**	
	540x85mm			**871.PA85** [2]	15		
		871.GY16 [1]	20	**871.PK85** [3]	5		
	110-->80mm					**871.RD080**	8
	80-->60mm					**871.RD060**	12

[1] Two ways for spring pipe
[2] With condensate discharge
[3] Box cover

Fixing

		WADO Series - Conditioning	
		871.	
Colour	**Dimension**	**Basis**	
	U-0350mm	**871.SP035**	2
	U-0450mm	**871.SP045**	2
	U-1000mm	**871.SP100**	4
		871.SP001	24

Fixing

		WADO Series - Conditioning 871.			
Colour	**Dimension**	**Stirrup (standard fixing)**			
	max 100kg	**871.MP100**	1		
	max 140kg			**871.MP140**	1

- 2 parts

		WADO Series - Conditioning 871.			
Dimension	**Ø**	**Vibration damper kit**			
h20mm	ø30mm	**871.AV101**	1		
h40mm	ø40mm			**871.AV201** **871.AV202**	1 1

- 4 parts

4

DOMESTIC

Electrical components for domestic and similar applications

4.1	Plugs and sockets	PAG. 538
4.2	Adaptors	PAG. 544
4.3	Multi sockets	PAG. 554
4.4	Cable reels	PAG. 572
4.5	Lampholders and switches	PAG. 578
4.6	TV/SAT - TEL - DATA	PAG. 590
4.7	Wiring accessories	PAG. 604

4.1

Plugs and sockets

- AZZURRA Series
  Plugs and trailing sockets
- BLUELINE Series
  Plugs and trailing sockets
- QUICK Series
  Plugs and trailing sockets
- UNEL Series
  Plugs and sockets with side earth contact

SCAME

Plugs and sockets
AZZURRA Series

Plugs and trailing sockets

				AZZURRA Series		
				104.		
				Plugs with straight cable outlet	**Trailing sockets with straight cable outlet**	**Flat plugs with 90° angled cable outlet**
Poles	**Current**	**Standard**	**Colour**	PLUG	SOCKET	PLUG
2P	10A				**104.4010** 50/500	
					104.4010/N 50/500	
				104.4000 [1] 50/500		
				104.4000/N [1] 50/500		
					104.4011 50/500	
					104.4011/N 50/500	
2P+E				**104.4001** [1] 50/500		**104.4068** [1] 100
				104.4001/N [1] 50/500		**104.4068/N** [1] 100
	16A			**104.4003** [1] 50/500		**104.4070** [1] 100
				104.4003/N [1] 50/500		**104.4070/N** [1] 100
					104.4013 50/500	
					104.4013/N 50/500	

[1] Sleeved pin

\- Individual packing

ITALIAN STANDARD
P10 - 10A
Shuttered socket CEI 23-50

ITALIAN STANDARD
P11 - 10A
Shuttered socket CEI 23-50

ITALIAN STANDARD
S10 - 10A
Plug

ITALIAN STANDARD
S11 - 10A
Plug

ITALIAN STANDARD
S17 - 16A
Plug

ITALIAN STANDARD
P11/P17 - 16A
(bivalente)
Shuttered socket CEI 23-50

Plugs and trailing sockets

BLUELINE Series

				106.		116.	
				Plugs with straight cable outlet	**Trailing sockets with straight cable outlet**	**Flat plugs with 90° angled cable outlet**	
Poles	**Current**	**Standard**	**Colour**	PLUG	SOCKET	PLUG	
2P	10A				**106.3010** 50/500		
					106.3010/N 50/500		
				106.3000 [1] 50/500			
				106.3000/N [1] 50/500			
					106.3011 50/500		
					106.3011/N 50/500		
2P+E	10A			**106.3001** [1] 50/500		**116.68** [1] 100	
				106.3001/N [1] 50/500		**116.68/N** [1] 100	
	16A			**106.3003** [1] 50/500		**116.70** [1] 100	
				106.3003/N [1] 50/500		**116.70/N** [1] 100	
					106.3013 50/500		
					106.3013/N 50/500		

[1] Sleeved pin

\- Individual packing

Plugs and sockets
QUICK Series

Plugs and trailing sockets

				QUICK Series		
				110.		
				Rubber housing		**Thermoplastic housing**
Poles	**Current**	**Standard**	**Colour**	CONNECTOR	PLUG	PLUG
2P+E	13A					**110.3000** [1] 20/400
	15A					**110.3010** 20/400
	16A				**110.3100** 10/150	
				110.3150 10/150		
				110.3160 10/150		

[1] Fused

BRITISH STANDARD 2P+E 13A
Plug

BRITISH STANDARD 2P+E 15A
Plug

FRENCH-GERMAN STANDARD 2P+E 16A
Plug

GERMAN STANDARD 2P+E 16A
Shuttered socket

FRENCH STANDARD 2P+E 16A
Shuttered socket

ITALIAN STANDARD P30 2P+E 16A
Shuttered socket CEI 23-50

PLURISTANDARD P40 2P+E 16A
Shuttered socket

GERMAN STANDARD 2P+E 16A
Plug

Plugs and sockets with side earth contact

				UNEL Series		
				130.		
				Plugs with straight cable outlet	**Trailing sockets with straight cable outlet**	**Plugs with 90° angled cable outlet**
Poles	**Current**	**Standard**	**Colour**	PLUG	SOCKET	PLUG
2P+E	16A				**130.2084** 25/250	
					130.2084/N 25/250	
					130.2085 25/250	
					130.2085/N 25/250	
				130.2063 50/500		
				130.2063/N 50/500		
						130.83 50/500
						130.83/N 50/500
					130.2083 25/250	
					130.2083/N 25/250	

4.2 Adaptors

- AZZURRA Series
  Adaptors
- BLUELINE Series
  Adaptors

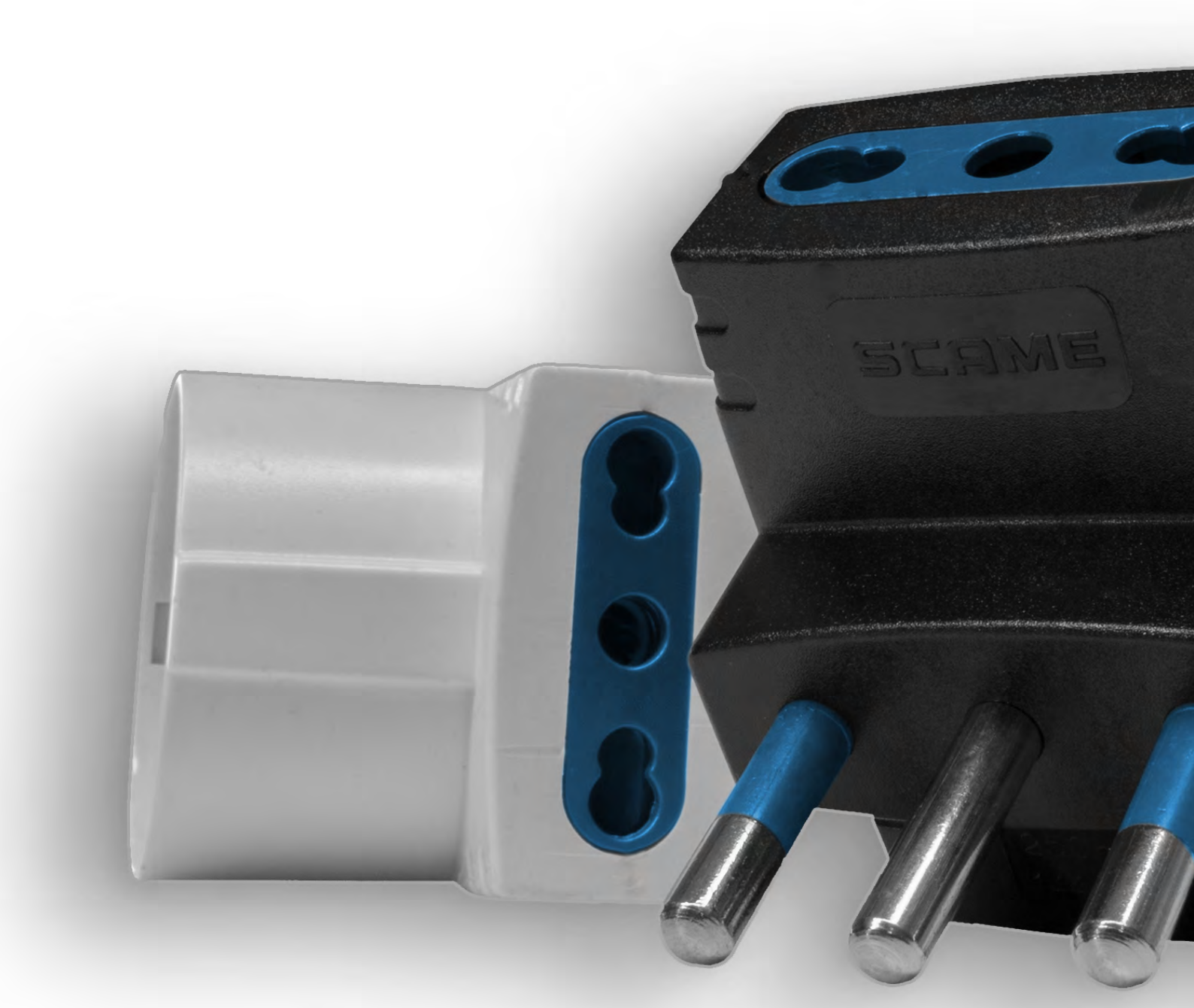

Adaptors
AZZURRA Series

One-way adaptors

Standard P30

Poles	Current	Plug	Standard	Sockets	Colour	AZZURRA Series 144. ONE-WAY ADAPTOR	
2P+E	10A			1x2P+E-16A-(P30)		**144.441**	50
						144.441/N	50
	16A					**144.451**	50
						144.451/N	50

- Sleeved pin
- Individual packing

Multi-way adaptors

3-way adaptors

Poles	Current	Plug	Standard	Sockets	Colour	AZZURRA Series 144. 3-WAY ADAPTOR	
2P+E	10A			3x2P+E-10A-(P11)		**144.455**	50
						144.455/N	50
	16A			3x2P+E-16A-(P17/11)		**144.450**	25/250
						144.450/N	25/250

- Sleeved pin
- Individual packing

ITALIAN STANDARD P11 - 10A
Shuttered socket CEI 23-50

ITALIAN STANDARD P11/P17 - 16A (bivalente)
Shuttered socket CEI 23-50

ITALIAN STANDARD P30 2P+E 16A
Shuttered socket CEI 23-50

2P+E-10A-(S11)

2P+E-16A-(S17)

ITALIAN STANDARD P17 - 16A
Shuttered socket CEI 23-50

PLURISTANDARD P40 2P+E 16A
Shuttered socket

Multi-way adaptors

3-way multi-standard adaptors

Poles	Current	Plug	Standard	Sockets	Colour	AZZURRA Series 144. 3-WAY ADAPTOR	
2P+E	10A			1x2P+E-16A-(P30) 2x2P+E-10A-(P11)		**144.457**	25
						144.457/N	25
	16A			2x2P+E-16A-(P17/11) 1x2P+T-16A-(P40)		**144.470**	25
						144.470/N	25
				1x2P+E-16A-(P30) 2x2P+E-16A-(P17/11)		**144.459**	25
						144.459/N	25

- Sleeved pin
- Individual packing

Adaptors
BLUELINE Series

One-way adaptors

Side earth P30

Poles	Current	Plug	Standard	Sockets	Colour	BLUELINE Series 146. ONE-WAY ADAPTOR	
2P+E	10A			1x2P+E-16A-(P30)		**146.641**	50
						146.641/N	50
	16A					**146.651**	50
						146.651/N	50

- Sleeved pin
- Individual packing

Side earth P30 - Spacesaver

Poles	Current	Plug	Standard	Sockets	Colour	BLUELINE Series 146. SPACE SAVER ADAPTER	
2P+E	10A			1x2P+E-16A-(P30)		**146.661**	50
						146.661/N	50

- Sleeved pin
- Individual packing

ITALIAN STANDARD P30 2P+E 16A
Shuttered socket CEI 23-50

2P+E-10A-(S11)

2P+E-16A-(S17)

ITALIAN STANDARD P11/P17 - 16A (bivalente)
Shuttered socket CEI 23-50

2P+E-16A-(FRENCH)

One-way adaptors

Poles	Current	Plug	Standard	Sockets	Colour	BLUELINE Series 146. ONE-WAY ADAPTOR
2P+E	16A			1x2P+E-16A-(P17/11)		**146.351** 50/500
						146.351/N 50/500

Aligned poles

- Sleeved pin
- Individual packing

Poles	Current	Plug	Standard	Sockets	Colour	BLUELINE Series 146. ONE-WAY ADAPTOR
2P+E	16A			1x2P+E-16A-(P17/11)		**146.361** 50
						146.361/N 50

French-german standard

- Individual packing

Adaptors
BLUELINE Series

Multi-way adaptors

BLUELINE Series
146.

3-way adaptors

Poles	Current	Plug	Standard	Sockets	Colour	3-WAY ADAPTOR	
2P+E	10A			3x2P+E-10A-(P11)		**146.555/3**	50
						146.555/3-N	50
	16A			3x2P+E-16A-(P17/11)		**146.550/3**	25/250
						146.550/3-N	25/250

- Sleeved pin
- Individual packing

BLUELINE Series
146.

3-way multi-standard adaptors

Poles	Current	Plug	Standard	Sockets	Colour	3-WAY ADAPTOR	
2P+E	10A			1x2P+E-16A-(P30) 2x2P+E-10A-(P11)		**146.557**	25
						146.557/N	25
	16A			1x2P+E-16A-(P30) 2x2P+E-16A-(P17/11)		**146.559**	25
						146.559/N	25
				2x2P+E-16A-(P17/11) 1x2P+T-16A-(P40)		**146.570**	25
						146.570/N	25

- Sleeved pin
- Individual packing

ITALIAN STANDARD P11 - 10A
Shuttered socket CEI 23-50

ITALIAN STANDARD P11/P17 - 16A (bivalente)
Shuttered socket CEI 23-50

ITALIAN STANDARD P30 2P+E 16A
Shuttered socket CEI 23-50

PLURISTANDARD P40 2P+E 16A
Shuttered socket

2P+E-10A-(S11)

2P+E-16A-(S17)

ITALIAN STANDARD P17 - 16A
Shuttered socket CEI 23-50

Multi-way adaptors

BLUELINE Series
146.

3-way multi-standard adaptors (space saver)

Poles	Current	Plug	Standard	Sockets	Colour	SPACE SAVER ADAPTER	
2P+E	10A			1x2P+E-16A-(P30) 2x2P+E-10A-(P11)		**146.560**	25
						146.560/N	25
	16A			1x2P+E-16A-(P30) 2x2P+E-16A-(P17/11)		**146.561**	25
						146.561/N	25

- Sleeved pin
- Individual packing

BLUELINE Series
146.

4-way adaptors

Poles	Current	Plug	Standard	Sockets	Colour	4-WAY ADAPTOR	
2P+E	10A			4x2P+E-10A-(P11)		**146.534**	25/250
						146.534/N	25/250
	16A			4x2P+E-16A-(P17/11)		**146.530**	25/250
						146.530/N	25/250

- Sleeved pin
- Individual packing

Adaptors
BLUELINE Series

Multi-way adaptors

BLUELINE Series

146.

2-way adaptors with luminous indicator

Poles	Current	Plug	Standard	Sockets	Colour	2-WAY ADAPTOR	
2P+E	10A			2x2P+E-10A-(P11)		**146.500**	25/250
	16A			2x2P+E-16A-(P17/11)		**146.501**	25/250

- Sleeved pin
- Individual packing

BLUELINE Series

146.

2-way adaptors with USB

Poles	Current	Plug	Standard	Sockets	Colour	USB ADAPTOR	
2P+E	10A			2x2P+E-10A-(P11)		**146.510**	10
						146.510/N	10
	16A			2x2P+E-16A-(P17/11)		**146.511**	10
						146.511/N	10

- USB socket (Universal Serial Bus) for power supply of electronic devices (1,2A max)

ITALIAN STANDARD P11 - 10A
Shuttered socket CEI 23-50

ITALIAN STANDARD P17 - 16A
Shuttered socket CEI 23-50

ITALIAN STANDARD P11/P17 - 16A (bivalente)
Shuttered socket CEI 23-50

2P+E-10A-(S11)

2P+E-16A-(S17)

USB
USB (Universal Serial Bus)

Lighting protection
With special device to protect against voltage overload in the electrical supply.

Adaptors

	BLUELINE Series - Lighting pr.
	146.

Lightning protection

Poles	Current	Plug	Standard	Sockets	Colour	LIGHTNING PROTECTION
2P+E	10A			1x2P+E-10A-(P11)		**146.360** 12/48

With lightning protection

- Sleeved pin
- Individual packing

4.3 Multi sockets

- TREND Series
  Multi sockets
- BLUELINE Series
  Multi sockets
- SICURA Series
  Multi sockets
- Serie SPYROS
  Extension cords for domestic applications

Multi sockets

TREND Series
165.

With cable and plug - Without luminous switch

Current	Plug	Standard	no.	Sockets	Cable section	Max power	Colour	MULTI SOCKET	
16A			3	1x2P+E-16A-(P30) 2x2P+E-16A-(P17/11)	1mm²	MAX 3.600W		**165.10401.N**	10
								165.10401.R	10
			6	2x2P+E-16A-(P30) 4x2P+E-16A-(P17/11)				**165.20401.N**	10
								165.20401.R	10
			9	3x2P+E-16A-(P30) 6x2P+E-16A-(P17/11)				**165.30401.N**	10
								165.30401.R	10

With 1,5m H05VV-F (PVC) cable and plug

TREND Series
165.

With cable and plug - With luminous switch

Current	Plug	Standard	no.	Sockets	Cable section	Max power	Colour	MULTI SOCKET	
16A			12	4x2P+E-16A-(P30) 8x2P+E-16A-(P17/11)	1mm²	MAX 3.600W		**165.40411.N**	10
								165.40411.R	10
			6	2x2P+E-16A-(P30) 4x2P+E-16A-(P17/11)				**165.20411.N**	10
								165.20411.R	10
			9	3x2P+E-16A-(P30) 6x2P+E-16A-(P17/11)				**165.30411.N**	10
								165.30411.R	10

With 1,5m H05VV-F (PVC) cable and plug

ITALIAN STANDARD P11/P17 - 16A (bivalente)
Shuttered socket CEI 23-50

ITALIAN STANDARD P30 2P+E 16A
Shuttered socket CEI 23-50

2P+E-16A-(S17)

2P+E-10A-(S11)

Multi sockets

								TREND Series
								165.
								With cable and plug - With luminous switch [SAFETY SWITCH]
Current	**Plug**	**Standard**	**no.**	**Sockets**	**Cable section**	**Max power**	**Colour**	MULTI SOCKET
10A			6	2x2P+E-16A-(P30) 4x2P+E-16A-(P17/11)	0,75mm²	MAX 2.300W		**165.20441.N** 10
								165.20441.R 10

With 1,5m H05VV-F (PVC) cable and plug

- SAFETY-SWITCH: Luminous switch with overload protection device

APPLICATION EXAMPLE

Multi sockets
TREND Series

Multi sockets

Current	Plug	Standard	no.	Sockets	Cable section	Max power	Colour	TREND Series 165. MULTI SOCKET
16A			6	2x2P+E-16A-(P30) 4x2P+E-16A-(P17/11)	1mm²	MAX 3.600W		**165.20421.T** 10
			9	3x2P+E-16A-(P30) 6x2P+E-16A-(P17/11)				**165.30421.T** 10

With lightning protection - With luminous switch

With 1,5m H05VV-F (PVC) cable and plug

- Transparent case

TREND Series
Multi-outlet socket with lighting protection

ITALIAN STANDARD P11/P17 - 16A (bivalente)
Shuttered socket CEI 23-50

ITALIAN STANDARD P30 2P+E 16A
Shuttered socket CEI 23-50

2P+E-16A-(S17)

Lighting protection
With special device to protect against voltage overload in the electrical supply.

2P+E-16A-(GERMAN)

USB
USB (Universal Serial Bus)

Multi sockets

TREND Series
165.

USB socket - With luminous switch

Current	Plug	Standard	Sockets	Cable section	Max power	Colour	MULTI SOCKET WITH USB	
16A			1x2P+E-16A-(P30) 2x2P+E-16A-(P17/11)	1mm²	MAX 3.600W		**165.20431.N**	10
							165.20431.R	10
							165.20431.ND	10
							165.20431.RD	10

With 1,5m H05VV-F (PVC) cable and plug

- USB socket (Universal Serial Bus) for power supply of electronic devices (1,2A max)

Multi sockets
BLUELINE Series

Multi sockets

BLUELINE Series - Lighting pr.

160.

With lightning protection - With luminous switch

Current	Plug	Standard	no.	Sockets	Cable section	Max power	Colour	MULTI SOCKET	
10A				6x2P+E-10A-(P11)		MAX 2.300W		**160.237/C**	10
								160.237/C-F [1]	10
								160.237/C-T [1]	10
			6	6x2P+E-16A-(P17/11)				**160.232/C**	10
								160.232/C-F [1]	10
								160.232/C-T [1]	10
				3x2P+E-16A-(P17/11) 3x2P+E-16A-(P30)	1mm²			**160.233/C**	10
								160.233/C-F [1]	10
								160.233/C-T [1]	10
			4	4x2P+E-16A-(P30)				**160.240/C**	10
								160.240/C-F [1]	10
								160.240/C-T [1]	10
16A			6	3x2P+E-16A-(P17/11) 3x2P+E-16A-(P30)		MAX 3.600W		**160.233/D**	10
								160.240/D	10
				4x2P+E-16A-(P30)				**160.240/D-F** [1]	10
								160.240/D-T [1]	10
								160.243/D	10
			4	4x2P+E-16A-(GERMAN)				**160.243/D-F**	10
								160.243/D-T	10
								160.249/C	10
				4x2P+E-16A-(FRENCH)	1mm²			**160.249/C-F** [1]	10
								160.249/C-T [1]	10

With 1,5m H05VV-F (PVC) cable and plug
With luminous switch
With lightning protection
[1] Transparent case

ITALIAN STANDARD P11 - 10A
Shuttered socket CEI 23-50

ITALIAN STANDARD P11/P17 - 16A (bivalente)
Shuttered socket CEI 23-50

ITALIAN STANDARD P30 2P+E 16A
Shuttered socket CEI 23-50

GERMAN STANDARD 2P+E 16A
Shuttered socket

FRENCH STANDARD 2P+E 16A
Shuttered socket

2P+E-10A-(S11)

2P+E-16A-(S17)

2P+E-16A-(GERMAN)

Multi sockets

BLUELINE Series

160.

With cable and plug - With luminous switch

Current	Plug	Standard	no.	Sockets	Cable section	Max power	Colour	MULTI SOCKET	
10A				6x2P+E-10A-(P11)	0,75mm²	MAX 2.300W		**160.250/C**	10
								160.250/C-N	10
				6x2P+E-16A-(P17/11)				**160.229/C**	10
								160.229/C-N	10
			6					**160.229/C-F** [1]	10
								160.229/C-T [1]	10
				3x2P+E-16A-(P17/11) 3x2P+E-16A-(P30)				**160.230/C**	10
								160.230/C-N	10
								160.230/C-F [1]	10
								160.230/C-T [1]	10
					1mm²			**160.239/C**	10
			4	4x2P+E-16A-(P30)				**160.239/C-N**	10
								160.239/C-F [1]	10
								160.239/C-T [1]	10
16A			6	3x2P+E-16A-(P17/11) 3x2P+E-16A-(P30)		MAX 3.600W		**160.230/D**	10
								160.230/D-N	10
								160.239/D	10
				4x2P+E-16A-(P30)				**160.239/D-N**	10
								160.239/D-F [1]	10
								160.239/D-T [1]	10
								160.242/C	10
			4	4x2P+E-16A-(GERMAN)				**160.242/C-N**	10
								160.242/C-F	10
								160.242/C-T	10
								160.248/C	10
				4x2P+E-16A-(FRENCH)	1mm²			**160.248/C-N**	10
								160.248/C-F [1]	10
								160.248/C-T [1]	10

With 1,5m H05VV-F (PVC) cable and plug

With luminous switch

[1] Transparent case

2P+E-16A-(FRENCH)

Lighting protection
With special device to protect against voltage overload in the electrical supply.

Multi sockets

Without cable and plug - With luminous switch

Current	Standard	no.	Sockets	Max power	Colour	BLUELINE Series 160. MULTI SOCKET	
16A		6	6x2P+E-16A-(P17/11)	MAX 3.600W		**160.229**	10/100
						160.229/N	10/100
						160.229/F[1]	10/100
						160.229/T[1]	10/100
			3x2P+E-16A-(P17/11) 3x2P+E-16A-(P30)			**160.230**	10/40
						160.230/N	10/40
						160.230/F[1]	10/40
						160.230/T[1]	10/40
			4x2P+E-16A-(P30)			**160.239**	10/50
						160.239/N	10/50
						160.239/F[1]	10/50
						160.239/T[1]	10/50
		4	4x2P+E-16A-(GERMAN)			**160.242**	10/50
						160.242/N	10/50
						160.242/F	10/50
						160.242/T	10/50
			4x2P+E-16A-(FRENCH)			**160.248**	10/50
						160.248/N	10/50
						160.248/F[1]	10/50
						160.248/T[1]	10/50

With luminous switch

[1] Transparent case

ITALIAN STANDARD P11/P17 - 16A (bivalente)
Shuttered socket CEI 23-50

ITALIAN STANDARD P30 2P+E 16A
Shuttered socket CEI 23-50

GERMAN STANDARD 2P+E 16A
Shuttered socket

FRENCH STANDARD 2P+E 16A
Shuttered socket

ITALIAN STANDARD P11 - 10A
Shuttered socket CEI 23-50

2P+E-10A-(S11)

2P+E-16A-(S17)

Multi sockets

With cable and plug - Without luminous switch (Italian plug)

Current	Plug	Standard	no.	Sockets	Cable section	Max power	Colour	BLUELINE Series 160. MULTI SOCKET	
10A			4	4x2P+E-10A-(P11)	0,75mm²	MAX 2.300W		**160.219/C**	10
								160.219/C-N	10
								160.219/C-F[1]	10
								160.219/C-T[1]	10
								160.224/C	10
			6	6x2P+E-10A-(P11)				**160.224/C-N**	10
								160.224/C-F[1]	10
								160.224/C-T[1]	10
16A			3	3x2P+E-16A-(P17/11)	1mm²	MAX 3.600W		**160.220/C**	10
								160.220/C-N	10
								160.220/C-F[1]	10
								160.220/C-T[1]	10
			4	4x2P+E-16A-(P17/11)				**160.223/C**	10
								160.223/C-N	10
								160.223/C-F[1]	10
								160.223/C-T[1]	10
				6x2P+E-16A-(P17/11)				**160.225/C**	10
								160.225/C-N	10
								160.225/C-F[1]	10
								160.225/C-T[1]	10
			6	3x2P+E-16A-(P17/11) 3x2P+E-16A-(P30)				**160.231/C**	10
								160.231/C-N	10
								160.231/C-F[1]	10
								160.231/C-T[1]	10
			4	4x2P+E-16A-(P30)				**160.238/C**	10
								160.238/C-N	10
								160.238/C-F[1]	10
								160.238/C-T[1]	10

With 1,5m H05VV-F (PVC) cable and plug

[1] Transparent case

Multi sockets

With cable and plug - Without luminous switch (European plug)

Current	Plug	Standard	no.	Sockets	Cable section	Max power	Colour	BLUELINE Series 160. MULTI SOCKET	
16A			4	4x2P+E-16A-(P30)	1mm²	MAX 3.600W		**160.238/D**	10
								160.238/D-N	10
								160.238/D-F [1]	10
								160.238/D-T [1]	10
								160.241/C	10
				4x2P+E-16A-(GERMAN)				**160.241/C-N**	10
								160.241/C-F	10
								160.241/C-T	10
								160.247/C	10
				4x2P+E-16A-(FRENCH)	1mm²			**160.247/C-N**	10
								160.247/C-F [1]	10
								160.247/C-T [1]	10

With 1,5m H05VV-F (PVC) cable and plug

[1] Transparent case

ITALIAN STANDARD P30 2P+E 16A
Shuttered socket CEI 23-50

GERMAN STANDARD 2P+E 16A
Shuttered socket

FRENCH STANDARD 2P+E 16A
Shuttered socket

2P+E-16A-(GERMAN)

2P+E-16A-(FRENCH)

ITALIAN STANDARD P11 - 10A
Shuttered socket CEI 23-50

ITALIAN STANDARD P11/P17 - 16A (bivalente)
Shuttered socket CEI 23-50

Multi sockets

Without cable and plug - Without luminous switch

Current	Standard	no.	Sockets	Max power	Colour	BLUELINE Series 160. MULTI SOCKET	
10A		4	4x2P+E-10A-(P11)	MAX 2.300W		**160.219**	10/100
						160.219/N	10/100
						160.219/F [1]	10/100
						160.219/T [1]	10/100
		6	6x2P+E-10A-(P11)			**160.224**	10/120
						160.224/N	10/120
						160.224/F [1]	10/120
						160.224/T [1]	10/120
		3	3x2P+E-16A-(P17/11)			**160.220**	10/100
						160.220/N	10/100
						160.220/F [1]	10/100
						160.220/T [1]	10/100
		4	4x2P+E-16A-(P17/11)			**160.223**	10/100
						160.223/N	10/100
						160.223/F [1]	10/100
						160.223/T [1]	10/100
		6	6x2P+E-16A-(P17/11)			**160.225**	10/120
						160.225/N	10/120
						160.225/F [1]	10/120
						160.225/T [1]	10/120
16A			3x2P+E-16A-(P17/11) 3x2P+E-16A-(P30)	MAX 3.600W		**160.231**	10/40
						160.231/N	10/40
						160.231/F [1]	10/40
						160.231/T [1]	10/40
			4x2P+E-16A-(P30)			**160.238**	10/50
						160.238/N	10/50
						160.238/F [1]	10/50
						160.238/T [1]	10/50
		4	4x2P+E-16A-(GERMAN)			**160.241**	10/50
						160.241/N	10/50
						160.241/F	10/50
						160.241/T	10/50
			4x2P+E-16A-(FRENCH)			**160.247**	10/50
						160.247/N	10/50
						160.247/F [1]	10/50
						160.247/T [1]	10/50

[1] Transparent case

Multi sockets
BLUELINE Series

Multi sockets

BLUELINE Series

160.

Desk multi sockets

Current	Plug	Standard	no.	Sockets	Max power	Colour	MULTI SOCKET FOR DESK
16A			3	1x2P+E-16A-(P30) 2x2P+E-16A-(P17/11)	MAX 3.600W		**160.5013** 6/24
							160.5014 6/24

With 2m H05VV-F (PVC) 3x1mm² cable and plug 16A 2P+E

With luminous switch

BLUELINE Series

160.

Description	Colour	Support kit
MULTI SOCKET SUPPORT KIT		**160.001** 10/100

ITALIAN STANDARD P11/P17 - 16A (bivalente)
Shuttered socket CEI 23-50

ITALIAN STANDARD P30 2P+E 16A
Shuttered socket CEI 23-50

2P+E-16A-(S17)

PLURISTANDARD P40 2P+E 16A
Shuttered socket

Lighting protection
With special device to protect against voltage overload in the electrical supply.

Multi sockets

SICURA Series
161.

With lightning protection - With luminous switch

Current	Plug	Standard	no.	Sockets	Max power	Colour	MULTI SOCKET	
16A			4	4x2P+E-16A-(P40)	MAX 3.600W		**161.246/C-F**	10
							161.246/C-T	10

With 1,5m H05VV-F (PVC) cable and plug
With luminous switch
With lightning protection
\- Transparent case

SICURA Series
161.

With cable and plug - With luminous switch

Current	Plug	Standard	no.	Sockets	Max power	Colour	MULTI SOCKET	
16A			10	4x2P+E-16A-(P17/11) 6x2P+T-16A-(P40)	MAX 3.600W		**161.60511.N**	10
							161.60511.R	10
			4	4x2P+E-16A-(P40)			**161.40511.N**	10
							161.40511.F [1]	10
							161.40511.T [1]	10
							161.40511.R	10

With 1,5m H05VV-F (PVC) cable and plug
With luminous switch
[1] Transparent case

Multi sockets
SICURA Series

Multi sockets

SICURA Series

161.

With cable and plug - Without luminous switch

Current	Plug	Standard	no.	Sockets	Max power	Colour	MULTI SOCKET	
16A			10	4x2P+E-16A-(P17/11) 6x2P+T-16A-(P40)	MAX 3.600W		**161.60501.N**	10
							161.60501.R	10
			4	4x2P+E-16A-(P40)			**161.40501.N**	10
							161.40501.F[1]	10
							161.40501.T[1]	10
							161.40501.R	10

With 1,5m H05VV-F (PVC) cable and plug

[1] Transparent case

ITALIAN STANDARD P11/P17 - 16A (bivalente)
Shuttered socket CEI 23-50

PLURISTANDARD P40 2P+E 16A
Shuttered socket

2P+E-16A-(S17)

Multi sockets

						SICURA Series	
						161.	
						Without cable and plug - With luminous switch	
Current	**Standard**	**no.**	**Sockets**	**Max power**	**Colour**	MULTI SOCKET	
16A		10	4x2P+E-16A-(P17/11) 6x2P+T-16A-(P40)	MAX 3.600W		**161.60510.N**	10
						161.60510.R	10
		4	4x2P+E-16A-(P40)			**161.40510.N**	10
						161.40510.F [1]	10
						161.40510.T [1]	10
						161.40510.R	10

With luminous switch

[1] Transparent case

APPLICATION EXAMPLE

Multi sockets

Without cable and plug - Without luminous switch

Current	Standard	no.	Sockets	Max power	Colour	SICURA Series 161. MULTI SOCKET	
16A		10	4x2P+E-16A-(P17/11) 6x2P+T-16A-(P40)	MAX 3.600W		**161.60500.N**	10
						161.60500.R	10
		4	4x2P+E-16A-(P40)			**161.40500.N**	10
						161.40500.F [1]	10
						161.40500.T [1]	10
						161.40500.R	10

[1] Transparent case

Random colour
Random colour (.R) means casual “white base – grey lid” or “grey base – white lid”.

ITALIAN STANDARD P11/P17 - 16A (bivalente)
Shuttered socket CEI 23-50

PLURISTANDARD P40 2P+E 16A
Shuttered socket

Extension cords for domestic applications

				SPYROS Series 168.			
Description	**Cable length**	**Cable section**	**Colour**	**Without plug and connector**		**With plug and connector 2P+E 10A**	
EXTENSION CORD	3m	0,75mm²		**168.0072B-03**	10	**168.4272B-03**	10
				168.0072N-03	10	**168.4272N-03**	10
		1mm²		**168.0073B-03**	10	**168.4273B-03**	10
				168.0073N-03	10	**168.4273N-03**	10
	5m			**168.0073B-05**	10	**168.4273B-05**	10
				168.0073N-05	10	**168.4273N-05**	10

4.4

Cable reels

- TRIS (ENERGY) Series
  Cable reels - Low voltage versions with thermal switch
- TRIS Series (TV)
  Cable reels - TV versions
- TRIS (TEL) Series
  Cable reels - Telephone versions

SCAME
PREMERE PER RIATTIVARE
10m-3x1,5mm²
709.3310 230V~
3200W/ 230V~

Cable reels

TRIS (ENERGY) Series

Cable reels - Low voltage versions with thermal switch

Plug	Standard	no.	Sockets	Cable	Cable section	Cable length	
			2x2P+E-10A-(P11)		1mm²	5m	1200W
						10m	1100W
		2	2x2P+E-16A-(P17/11)			4m	1700W
						10m	
						15m	
						20m	
			1x2P+E-16A-(P30) 2x2P+E-16A-(P17/11)			5m	
		3				10m	
				H05VV-F	1,5mm²	15m	
						20m	1200W
			4x2P+E-16A-(P30)			10m	
						20m	
		4	4x2P+E-16A-(GERMAN)			10m	
						20m	
			4x2P+E-16A-(FRENCH)			10m	
						20m	
						5m	
		2	2x2P-10A-(P10)		1mm²	10m	1100W
						15m	

- After use rewind the cable carefully back into the reel.
- With thermal overload switch.
- The maximun power supply is shown on every single item.

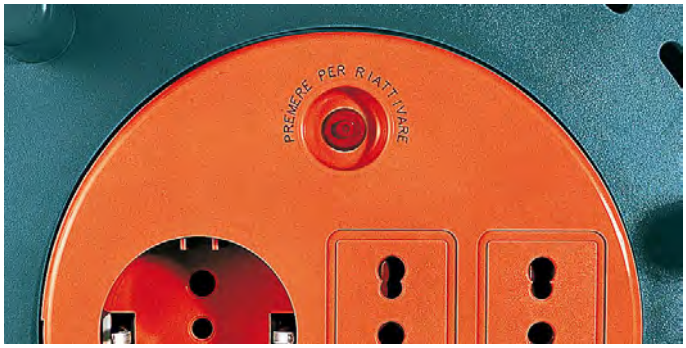

Thermal overload switch
A bimetallic device is put in close contact with the supply cable and protects it from excessive overheating resulting from the Joule effect. If activated, the device opens the circuit to the socket, interrupting the supply of electrical energy. Reactivation is only possible manually and if the temperature is below intervention threshold.
Warning: The thermal overload switch is not an isolator switch, therefore maintenance operations are carried out after having disconnected the circuit. The thermal overload switch does not protec

ITALIAN STANDARD P10 - 10A
Shuttered socket CEI 23-50

ITALIAN STANDARD P11 - 10A
Shuttered socket CEI 23-50

ITALIAN STANDARD P11/P17 - 16A (bivalente)
Shuttered socket CEI 23-50

ITALIAN STANDARD P30 2P+E 16A
Shuttered socket CEI 23-50

GERMAN STANDARD 2P+E 16A
Shuttered socket

FRENCH STANDARD 2P+E 16A
Shuttered socket

2P+E-10A-(S11)

2P+E-16A-(S17)

			TRIS Series 709.		
			TRIS 150 Series	**TRIS 190 Series**	**TRIS 230 Series**
	Volt	**Colour**		DOMESTIC CABLE REEL	
2200W			**709.2505** 1/12		
2300W				**709.3510** 1/6	
2850W			**709.2605** 1/12		
				709.3610 1/6	
					709.4615 1/6
					709.4620 1/6
				709.3705 1/6	
				709.3710 1/6	
					709.4715 1/6
3200W	250V				**709.4720** 1/6
				709.3310 1/6	
					709.4320 1/6
				709.3910 1/6	
					709.4920 1/6
				709.3810 1/6	
					709.4820 1/6
2200W			**709.2405** 1/12		
2300W				**709.3410** 1/6	
				709.3415 1/6	**709.4420** 1/6

2P-10A-(S10)

Wound cable power

Unwound cable power

Cable reels

TRIS Series (TV)

Cable reels - TV versions

						TRIS Series	
						707.	
						TRIS 130 Series	**TRIS 150 Series**
Plug	**no.**	**Sockets**	**Cable**	**Cable length**	**Colour**	DOMESTIC CABLE REEL	
TV Ø9,5	1	1xTV	COAXIAL	5m		**707.1105** 1/12	
				10m			**707.2110** 1/12
				15m			**707.2115** 1/12

- Rewind the cable completely after use.

Outlet to outlet connector - Plug to plug connector
Coaxial cable connector are available, as well as "outlet to outlet connector" and "plug to plug connector" for old adaptors and TV installations and ew TV installations according to CEI EN 50083.

TRIS Series
Cable reel for TV socket
IEC connector, diameter 9.5mm for coaxial cable.

Cable reels - Telephone versions

						TRIS Series 707.	
						TRIS 130 Series	**TRIS 150 Series**
Plug	**no.**	**Sockets**	**Cable**	**Cable length**	**Colour**	DOMESTIC CABLE REEL	
TELEPHONE 3P	2	1xTEL. 1xPLUG	TELEPHONE 3P	5m		**707.1205** 1/12	
				10m		**707.1210** 1/12	
				15m		**707.1215** 1/12	
				20m			**707.2220** 1/12

- Cable reels are provided with a 6/4 plug and line duplicator.
- Rewind the cable completely after use.

Plug
The telephone cable reels of the TRIS Series are provided with a 6/4 plug and a line duplicator.

TRIS Series
Plug to plug connector

4.5

Lampholders and switches

- LUX [Lampholders] Series
  Lampholders
- LUX [switches] Series
  Single pole switches
- LUX [celing] Series
  Ceiling accessories

Lampholders and switches

LUX [Lampholders] Series

For incandescent lamps

					LUX Series 190.	
Description	**Lamp holder**	**Dimension**	**Fixing**	**Colour**	**Plastic candles**	
CANDLE DRIP COVER	E14	h65mm			**190.CP70B**	50/300
					190.CP70A	50/300
		h85mm			**190.CP85B**	50/300
					190.CP85A	50/300
CANDLE LAMPHOLDER		h65mm	2 PARTS		**190.3570S**[1]	50/500
			HIGHER		**190.3570ES**[1]	50/500
		h85mm	2 PARTS		**190.3585S**[1]	50/500
			HIGHER		**190.3585ES**[1]	50/500

[1] Metal bracket.

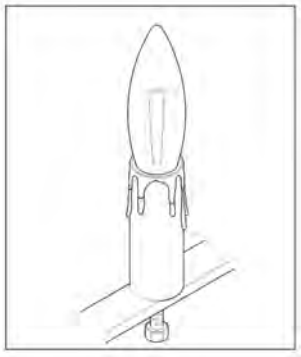

LUX Series
Fixing thread: M10x1mm

For incandescent lamps

				LUX Series 190.	
Description	Lamp holder	Cap	Colour	Lampholders - Skirt smooth	
LAMPHOLDER	E14	THREADED METAL ENTRY		**190.2000LNB**	100/600
				190.2000LN	100/600
		THREADED PLASTIC ENTRY		**190.2000LGB**	100/600
				190.2000LG	100/600
		THREADED METAL ENTRY AND EARTH		**190.2000LTB**	100/600
				190.2000LT	100/600
	E27	THREADED METAL ENTRY		**190.6000LNB**	50/300
				190.6000LN	50/300
		THREADED PLASTIC ENTRY		**190.6000LGB**	50/300
				190.6000LG	50/300
		THREADED METAL ENTRY AND EARTH		**190.6000LTB**	50/300
				190.6000LT	50/300

- Cable 2.5mm² (max).
- Entry: M10 x 1.

For incandescent lamps

Description	Lamp holder	Cap	Colour	LUX Series 190. Lampholders - Skirt threaded	
LAMPHOLDER	E14	THREADED METAL ENTRY		**190.2000FNB**	100/600
				190.2000FN	100/600
		THREADED PLASTIC ENTRY		**190.2000FGB**	100/600
				190.2000FG	100/600
				190.2000FGO	100/600
	E27	THREADED METAL ENTRY		**190.6000FNB**	50/300
				190.6000FN	50/300
		THREADED PLASTIC ENTRY		**190.6000FGB**	50/300
				190.6000FG	50/300
				190.6000FGO	50/300
		THREADED METAL ENTRY AND EARTH		**190.6000FTB**	50/300
				190.6000FT	50/300

- Cable 2.5mm² (max).
- Entry: M10 x 1.

Description	Lamp holder	Cap	Colour	LUX Series 190. Lampholders - Skirt partially threaded	
LAMPHOLDER	E14	THREADED METAL ENTRY		**190.2000FCNB**	100/600
				190.2000FCN	100/600
		THREADED PLASTIC ENTRY		**190.2000FCGB**	100/600
				190.2000FCG	100/600
	E27	THREADED METAL ENTRY		**190.6000FCNB**	50/300
				190.6000FCN	50/300
				190.7350Z	50/300
		THREADED PLASTIC ENTRY		**190.6000FCGB**	50/300
				190.6000FCG	50/300
		THREADED METAL ENTRY AND EARTH		**190.6000FCTB**	50/300
				190.6000FCT	50/300

- Cable 2.5mm² (max).
- Entry: M10 x 1.

For incandescent lamps

					LUX Series 190.	
Description	**Lamp holder**	**Dimension**	**Colour**	**Material**	**Shade ring**	
SHADE RING	E14	Ø43x15mm		THERMOPLASTIC	**190.31B**	50/500
					190.31	50/500
					190.31Z	50/500
		Ø43x8,5mm			**190.147B**	50/500
	E27	Ø48x8mm			**190.71B**	50/500
					190.71	50/500
		Ø58x13mm			**190.73B**	50/500
					190.73N	50/500
					190.73Z	50/500
		Ø65x12mm			**190.74B**	50/500
					190.74N	50/500

- To be used with threaded skirt lampholders.
- Lampshade holding ring.

					LUX Series 190.	
Description	**Lamp holder**	**Version**	**Colour**	**Material**	**Lampholder [Special T210°C]**	
LAMPHOLDER	E27	T210°C		THERMOPLASTIC	**190.5778/304T** ⏚	20/200
					190.5778/306L	20/200
					190.5778/311T	20/200
					190.5778/313T	20/200
					190.5778/348	20/200
					190.5778B	20/200

⏚ Earth terminal.
- Cable: 4mm² (max).
- 2 holes for screw fixing
- Screw terminals

Lampholders and switches

LUX [Lampholders] Series

For incandescent lamps

	LUX Series
	190.

Description	Lamp holder	Version	Colour	Material	Lampholder [Special T300°C]
LAMPHOLDER	E40	T300°C		CERAMIC	**190.5740B1** 10

- Cable section 1.5-4mm².
- Unscrewing brake.
- Screw terminals

	LUX Series
	190.

Description	Lamp holder	Version	Dimension	Cap	Colour	Material	Lampholders - Brass plated metal
SHADE RING	E27	T210°C	Ø58,5x15mm			BRASS PLATED METAL	**190.81** [1] [2] 50/500
LAMPHOLDER				THREADED METAL ENTRY			**190.8200** [3] [4] [5] [6] [7] 50/300
				THREADED METAL ENTRY AND EARTH			**190.8200T** [3] [4] [5] [6] [7] 50/300

[1] To be used with threaded skirt lampholders.
[2] Lampshade holding ring.
[3] With locking screw.
[4] With tube stop.
[5] Cable 2.5mm² (max).
[6] Entry: M10 x 1.
[7] Screw terminals

For incandescent lamps

						LUX Series	
						190.	
Description	Lamp holder	Colour	IP	Volt	Lamp power	Surface mounting lampholder	
LAMPHOLDER	E27		IP20	12V	60W	**190.100**	1/10
						190.5501/15TB	100

Total insulation e class II.

Suitable for being installed on usually flammable surface

- Surface mounting

For halogen lamps

		LUX Series	
		191.	
Dimension	Colour	For low voltage halogen lamps	
		LAMPHOLDER	
Ø17X10,2mm		**191.5031**	100/1000

- Type of coupling: G4/GZ4/GX5.3/GY6.35.
- Cable: Teflon-Fep 150mm.
- Made of steatite.
- Push-in terminals.

For halogen lamps

			LUX Series
			191.
			For halogen lamps - with bracket
Version	**Dimension**	**Colour**	LAMPHOLDER
LOW VOLTAGE HALOGEN LAMPS	140mm		**191.5122** 20/200

- Type of coupling: R7s.
- Cable: Teflon-Fep 200mm.
- Made of steatite.
- Profiled.
- Bracket with central hole and slots.

				LUX Series
				191.
				For halogen lamps
Version	**Dimension**	**Colour**	**Material**	LAMPHOLDER
HALOGEN LAMPS	Ø19x24,8mm		METAL	**191.5124** 50/500

- Type of coupling: R7s/RX7s/RX7s-24/RX7s-26/RX7s-32.
- Cable: Teflon-Fep 200mm.
- With fixing nut: M14 x 1.
- Made of aluminium and steatite.

Single pole switches

	LUX Series
	195.

Description	Colour	Volt	Current	Press switches - T 125°C
PUSH BOTTON SWITCH		250V	2A	**195.115B** [1][2][3][4] 100/1000 **195.135B** 3000

[1] NTR 1119/IMQ.
[2] Cable: 1mm² (max).
[3] With locknut.
[4] Push-in terminals.

	LUX Series
	195.

Description	Colour	Volt	Current	Pull switches - T 125°C
PULL SWITCH		250V	2A	**195.200B** 20/200

- Fixing Ø 3,2mm.
- Single pole switch with cord and white handle grip.

Lampholders and switches

LUX [switches] Series

Single pole switches

				LUX Series 195.	
Description	**Colour**	**Volt**	**Current**	**Slide in-line switches**	
SLIDE SWITCH		250V	2A	**195.450B**	20/200
				195.450N	20/200
				195.450P	20/200

- ASEV approved.
- Screw closed cover.
- Single pole switches.
- With neutral connection for flat cable.
- Cable: 0.75mm² (max).
- Also for inductive current.

				LUX Series 195.	
Description	**Colour**	**Volt**	**Current**	**Foot switches**	
FOOT SWITCH		250V	2A	**195.565B**	20/160
				195.565N	20/160
				195.565P	20/160

- Clip together case.
- Single pole foot switch.
- With neutral and earth terminals.
- Cable: 0.75mm² (max).
- Also for inductive current.

Ceiling accessories

			LUX Series 190.		
Description	**Colour**	**Material**	**Cylindrical ceiling rose**	**Conical ceiling rose**	**Spherical ceiling rose**
DECORATION		THERMOPLASTIC			**190.378** 500
CYLINDRICAL CUP			**190.363B** 50/500		
			190.363N 50/500		
CONICAL CUP				**190.366B** 50	
				190.366N 50	
SPHERICAL CUP					**190.376B** 50/250
					190.376N 50/250

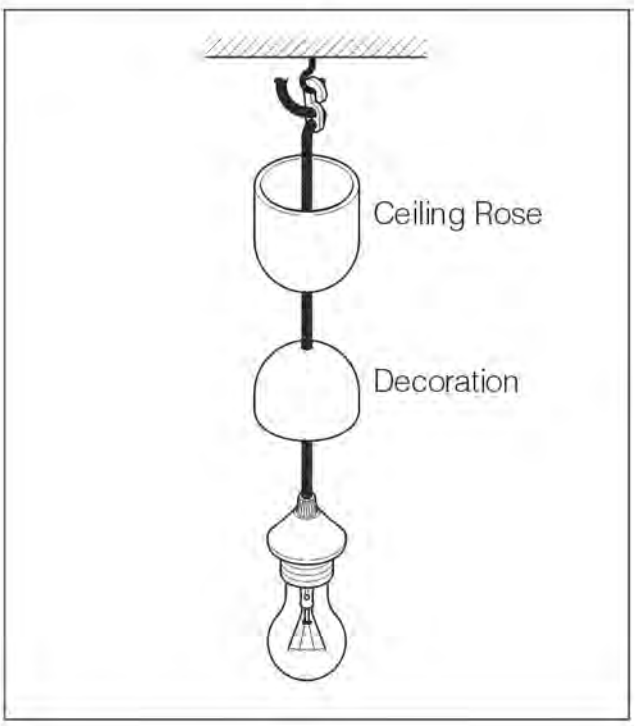

LUX Series
Ceiling Rose + Decoration

4.6

TV/SAT - TEL - DATA

- DATATEL-TEL Series
  Components for telephone installations
- DATATEL-DATA Series
  Component for structured cabling
- DATATEL-TV/SAT Series
  Plugs, sockets and accessories for tv installations

PLUG Standard

			DATATEL Series
			180.
Description	**Plug**	**Colour**	**Mobile plugs**
PLUG	PLUG 4/4	TRANSPARENT	**180.790** 100/1000
	PLUG 6/4		**180.791** 100/1000
	PLUG 6/6		**180.792** 100/1000
	PLUG 10/10		**180.793** 100/1000

- To be wired using the specially designed plug pincers.

				DATATEL Series			
				180.			
Description	**Installation**	**Sockets**	**Colour**	**Fixed telephone sockets**			
SOCKET	SURFACE MOUNTING	1xPLUG 6/4		**180.701** 12/60			
		1xPLUG 6/6			**180.702** 12/60		
	FLUSH/SURFACE MOUNTING	1xPLUG 6/4				**180.705** 12/60	
		2xPLUG 6/4					**180.706** 12/60

PLUG Standard

Description	Plug	Colour	DATATEL Series 180. RJ plug couplers	
COUPLER	PLUG 6/4		**180.794**	12/60
	PLUG 6/6		**180.795**	12/60
	PLUG 8/8		**180.7951**	60

- Suitable for connecting 2 cords with RJ plugs.

Description	Plug	Colour	DATATEL Series 180. Multiplier RJ plug	
DUPLICATOR	PLUG 6/4		**180.796**	12/60
TRIPLICATOR			**180.799**	12/60

- Doubles the connection capacity, allowing another appliance to be connected (eg. telephone + modem).

Description	Material	Dimension	DATATEL Series 180. Plug pincers			
PLUG PINCERS	METAL	4/4-6/6-8/8			**180.798**	10
	PLASTIC	4/4-6/4	**180.797**	1/10		
		4/4-6/6-8/8		**180.7971**	10	

- Suitable for wiring the RJ plugs.

PLUG Standard >> Telephone cords

DATATEL Series

180.

Plug	Cable length	Colour	Straight telephone cords with spade terminals and RJ plug	Straight telephone cords with RJ plugs	Extendable telephone cords with RJ plugs
			TELEPHONE CORD		
PLUG 4/4	2m				**180.741** [1] 12/60
					180.742 [1] 12/60
	4,8m				**180.743** [1] 12/60
					180.744 [1] 12/60
PLUG 6/4	2m		**180.723** 12/60	**180.724** 12/60	
				180.725 12/60	
	4,8m				**180.745** [1] 12/60
					180.746 [1] 12/60
	5m			**180.728** 12/60	
				180.729 12/60	
PLUG 6/6	2m			**180.726** 12/60	
				180.727 12/60	

[1] Plug with gold-plated contacts.

Components for telephone installations

DATATEL Series

180.

Flush mounting box

Dimension	Colour	SURFACE MOUNTING BOX	COVER PLAIN	SCREW-DOWN COVER
83,5mm		**180.690** 12/72	**180.691** 12/72	**180.692** 12/72

Telephone cable

Description	Poles	Cable length	Colour	DATATEL Series 180. Round telephone cable (1 meter)		Flat telephone cable (1 meter)	
ROUND TELEPHONE CABLE	3P	100m		**180.910**	100/1000		
				180.911	100/1000		
FLAT TELEPHONE CABLE	4P					**180.921** [1]	100/800
						180.920 [1]	100/800
	6P					**180.931** [1]	100/1000
						180.930 [1]	100/1000
	8P					**180.940** [1]	100/1000
	10P					**180.970** [1]	100/1000

[1] Suitable for RJ connectors.

- In coils of 100m.
- Not shuttered.

Component for structured cabling

Description	Plug	Version	Sockets	Colour	DATATEL Series 180. Free modular plugs for flexible cable	
SHELL					**180.800** 100/1000	
SHIELDED PLUG	CAT. 5 FTP	SHIELDED TYPE	RJ45			**180.813** 100/1000
		SHIELDED TYPE+INSERT				**180.814** 100/1000
UNSHIELDED PLUG	CAT. 5 UTP	UNSHIELDED TYPE				**180.811** 100/1000
		UNSHIELDED TYPE+INSERT				**180.812** 100/1000
	CAT. 6 UTP	UNSHIELDED TYPE				**180.815** 100/1000
	CAT. 3					**180.810** 100/1000

Description	N° outlets	Category of use	Version	Sockets	Colour	DATATEL Series 180. Wall telephone outlets - plug 8/8	
SURFACE MOUNTING SOCKET	1 INLETS	CAT. 5E	UNSHIELDED TYPE	CAT. 5E RJ45		**180.830**	10/100
			SHIELDED TYPE			**180.831**	10/100
	2 INLETS		UNSHIELDED TYPE			**180.832**	10/100
			SHIELDED TYPE			**180.833**	10/100

- Supplied with screws or both sides adhesive tape for wall fastening.

Component for structured cabling

					DATATEL Series 180.	
Description	**Category of use**	**Version**	**Sockets**	**Colour**	**Socket**	
RJ45 OUTLET	CAT. 5E FTP	SHIELDED TYPE 100Mbps	RJ45		**180.821**	25/100
	CAT. 5E UTP	UNSHIELDED TYPE 100 Mbps			**180.820**	25/100
	CAT. 6 FTP	SHIELDED TYPE 100Mbps			**180.823**	25/100
	CAT. 6 UTP	UNSHIELDED TYPE 100 Mbps			**180.822**	25/100

			DATATEL Series 180.	
Description	**N° outlets**	**Colour**	**Flush telephone outlets for 114x70mm built in box**	
COVER PLATE	1 INLETS		**180.841**	12/60
	2 INLETS		**180.842**	12/60
	3 INLETS		**180.843**	12/60
	4 INLETS		**180.844**	12/60
	6 INLETS		**180.846**	12/60
OUTLET COVERING CAP			**180.840**	50/1000

Component for structured cabling

Description	Cable length	Category of use	Version	Colour	DATATEL Series 180. Connecting patch cords - plug-plug 8/8	
PATCH CORD RJ45	1m	CAT. 5E FTP	FTP SHIELDED		**180.851**	12/60
		CAT. 5E UTP	UTP UNSHIELDED		**180.850**	12/60
		CAT. 6 FTP	FTP SHIELDED		**180.855**	12/60
		CAT. 6 UTP	UTP UNSHIELDED		**180.854**	12/60
	3m	CAT. 5E FTP	FTP SHIELDED		**180.853**	12/60
		CAT. 5E UTP	UTP UNSHIELDED		**180.852**	12/60
		CAT. 6 FTP	FTP SHIELDED		**180.857**	12/60
		CAT. 6 UTP	UTP UNSHIELDED		**180.856**	12/60

- Heat-sealed plugs

Description	Category of use	Dimension	Colour	DATATEL Series 180. Round rigid cable 24AWG cat.5 (1 meter)	
ROUND RIGID CABLE	CAT. 5 FTP	24AWG		**180.950**	100/500
	CAT. 5 UTP			**180.960**	100/500

- 4 pairs

For signals up to 2400 MHz

				DATATEL Series			
				180.			
Description	**Outlets type**	**Ø**	**Colour**	**Plugs and sockets ø9,5mm**			
CONNECTOR	STRAIGHT	ø9,5mm				**180.5520** 50	
	90°						**180.5521** 50
PLUG	STRAIGHT			**180.5510** 50			
	90°				**180.5511** 50		

- Impendance: 75Ω.
- For antenna system
- For signals up to 2,400 Mhz.

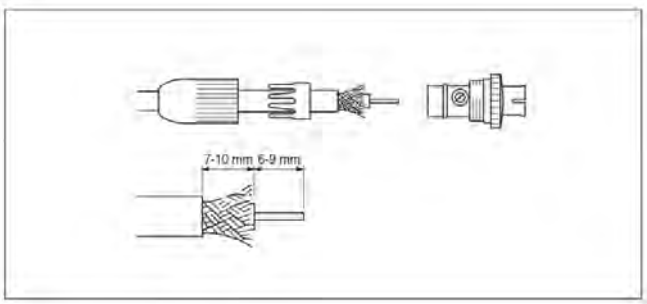

DATATEL-TV/SAT Series
PLUGS AND SOCKETS Ø 9,5mm (straight)
Wiring instructions

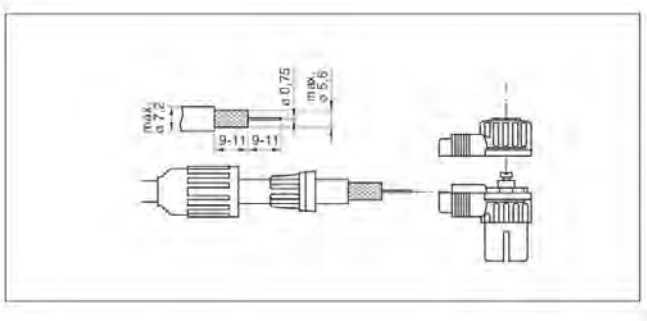

DATATEL-TV/SAT Series
PLUGS AND SOCKETS Ø 9,5mm (90°)
Wiring instructions

For signals up to 2400 MHz

Description	Version	DATATEL Series 180. Connector	
COUPLER	OUTLET TO OUTLET CONNECTOR	**180.5640** 10/100	
	PLUG TO PLUG CONNECTOR		**180.5641** 10/100

- Also suitable to connect old systems with new CEI EN 50083 systems.
- Impendance: 75Ω.
- For antenna system
- For signals up to 2,400 Mhz.

Description	Version	Ø	DATATEL Series 180. Accessories for television system with satellite receiver			
SCREW F-CONNECTOR	STANDARD LID	ø5,2mm		**180.4521** 100/1600		
		ø7mm				**180.4701** 100/1600
	HEAVY	ø5,2mm	**180.4520** 10/100			
		ø7mm			**180.4700** 10/100	

- Impendance: 75Ω.
- For antenna system
- For signals up to 2,400 Mhz.

For signals up to 862 MHz

				DATATEL Series 180.		
Description	**Version**	**Ø**	**Colour**	**Angled plugs 90° angled coaxial cable exit**	**Coaxial TV cable divider**	**Cable connectors Straight coaxial**
SOCKET						**180.60/CEI-P** [2] 200/2000
PLUG				**180.58/CEI** [1] 200/2000		**180.60/CEI-S** [2] 200/2000
PLUG/SOCKET		ø9,5mm				**180.60/CEI** [2] 200/2000
SPLITTER	1 SOCKET + 2 PLUGS				**180.563** [4] 10/50	
	1 PLUG + 2 SOCKETS				**180.561** [3] 50/500	

[1] 90° angled coaxial cable exit.
[2] Straight coaxial.
[3] 2 inductive side outlets.
[4] 2 resistive side outlets.

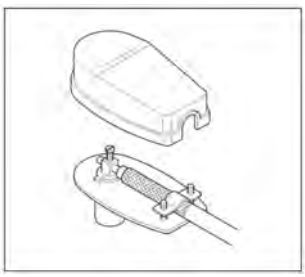

DATATEL-TV/SAT Series
Screw-down cable clamp

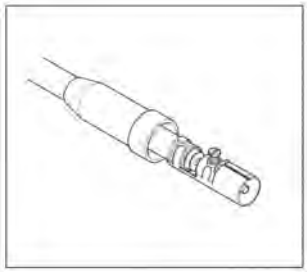

DATATEL-TV/SAT Series
Push in cable clamp

Plugs, sockets and accessories for tv installations

Description	Cable length	Colour	DATATEL Series 180. TV extension cords	
TV EXTENSION CORD 9.5mm	2m		**180.5902**	60
			180.5902/N	60

Description	Cable length	Colour	DATATEL Series 180. TV extension cords + adaptor	
TV EXTENSION CORD 9.5mm	2m		**180.5912**	60
	3m		**180.5913**	50
	5m		**180.5915**	35

Plugs, sockets and accessories for tv installations

Description	Plug	no.	Sockets	Cable	Cable length	Colour	TRIS Series 707. TV cable reel TRIS series	
DOMESTIC CABLE REEL	TV Ø9,5	1	1xTV	COAXIAL	5m		**707.1105**	1/12
					10m		**707.2110**	1/12
					15m		**707.2115**	1/12

- Rewind the cable completely after use.

Outlet to outlet connector - Plug to plug connector
Coaxial cable connector are available, as well as "outlet to outlet connector" and "plug to plug connector" for old adaptors and TV installations and ew TV installations according to CEI EN 50083.

TRIS Series
Cable reel for TV socket
IEC connector, diameter 9.5mm for coaxial cable.

4.7

Wiring accessories

- PROTECTA Series
  IP66 weatherproof switches & sockets
- UNIBOX Series [+EVOLUTION]
  Enclosures for wiring accessories
- EVOLUTION Series
  Plates and devices

Surface mounting - IP66 >> Control devices

Description	Version	Current	Dimension	PROTECTA Series 137. 1 GANG		2 GANG	
REVERSING SWITCH	WITH NEON	10AX	M95(95x95mm)	**137.5111**	1/12		
		20AX		**137.5112**	1/12		
DP SWITCH		20A		**137.5462**	1/12		
SP BELL PUSH SWITCH "BELL"		10A		**137.5311B**	1/12		
SP BELL PUSH SWITCH "PRESS"				**137.5311P**	1/12		
		20A		**137.5312P**	1/12		
SP ONE WAY SWITCH		10AX		**137.5011**	1/12	**137.5021**	1/12
		20AX		**137.5012**	1/12	**137.5022**	1/12
SP TWO WAY SWITCH		10AX		**137.5211**	1/12	**137.5221**	1/12
		20AX		**137.5212**	1/12	**137.5222**	1/12
PUSH BUTTON SINGLE POLE 2 GANG		10A				**137.5321**	1/12

Surface mounting - IP66

Description	Version	Current	Dimension	PROTECTA Series 137. Spur units	
SPUR UNIT	WITH FUSE AND SWITCH	13A	M115(115x115mm)	**137.5410**	1/12

IP66
Specifically high formulated gel seal to mantein protection degree when the plug is inserted

RJ45
Standard Ethernet

ITALIAN STANDARD P17/11 16A (bivalente)
Shuttered socket CEI 23-50

FRENCH STANDARD 16A
Shuttered socket

FRENCH-GERMAN STANDARD 16A
Shuttered socket

ITALIAN STANDARD P30 - 16A
Shuttered socket CEI 23-50

SWISS STANDARD 10A
Unshuttered socket SEV 1011:1998

ARGENTINIAN STANDARD 10A
Unshuttered socket

Surface mounting - IP66

Description	Version	Current	Dimension	PROTECTA Series 137. Modular socket outlets	
RJ45 OUTLET	RJ45		M95(95x95mm)	**137.6481.50** [2]	1/12
GERMAN STANDARD SOCKET	GERMAN	16A		**137.6407**	1/12
	GERMAN UNSHUTTER			**137.6412** [1]	1/12
ITALIAN P30 STANDARD SOCKET	ITALIAN P30			**137.6404**	1/12
ITALIAN P17/11 STANDARD SOCKET	ITALIAN P17/11 (DUAL USE)			**137.6403**	1/12
FRENCH STANDARD SOCKET	FRENCH			**137.6411**	1/12
ARGENTINIAN STANDARD SOCKET	ARGENTINE	10A		**137.6424**	1/12
NEOZELANDER STANDARD SOCKET	NEW ZELAND			**137.6427**	1/12
SWISS STANDARD SOCKET	SWISS			**137.6417**	1/12
BRAZILIAN STANDARD SOCKET	BRAZILIAN			**137.6421**	1/12

[1] Shutterless socket, subject to normative restrictions or prohibitions in Europe or in other geographical areas. Check the national laws prior to using or installing it.
[2] RJ45 - Cat.5E

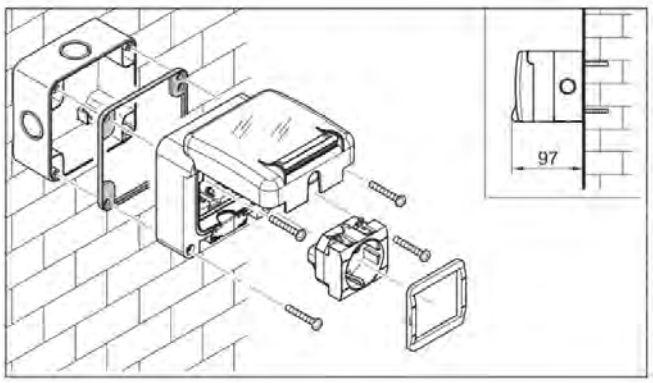

PROTECTA Series
Surface mounting

BRAZILIAN STANDARD 10A
Unshuttered socket ABNT NBR 14136:2002

NEW ZEALAND STANDARD 10A
Unshuttered socket AS/N25 3112

GERMAN STANDARD 16A
Unshuttered socket

Surface mounting - IP66

Description	Version	Current	Dimension	PROTECTA Series 137. BS socket outlets	
13A SOCKET + 20A DP SWITCH			M95x2(195x95mm)	**137.6003**	1/12
DOUBLE DP SWITCHSOCKET	BRITISH BS1363	13A	M195(195x115mm)	**137.6042**	1/12
				137.6043 [1]	1/12
DOUBLE UNSWITCHED SOCKET			M95x2(195x95mm)	**137.6002**	1/12
SINGLE DP SWITCHSOCKET			M115(115x115mm)	**137.6022**	1/12
SINGLE SP SWITCHSOCKET	BRITISH BS546	15A		**137.6111**	1/12
SINGLE UNSWITCHED SOCKET	BRITISH BS1363	13A	M95(95x95mm)	**137.6001**	1/12

[1] RCD protection (passive)

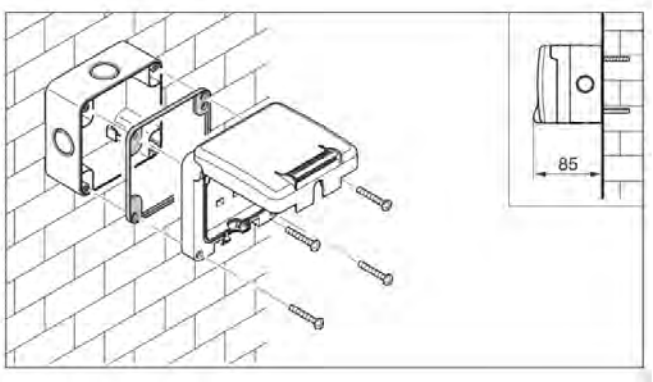

PROTECTA Series
Surface mounting

BRITISH STANDARD 15A
Shuttered socket BS 546

BRITISH STANDARD 13A
Shuttered socket BS 1363-2

IP66
Specifically high formulated gel seal to mantein protection degree when the plug is inserted

Surface mounting - IP66

		PROTECTA Series 137.			
Description	**Dimension**	**Surface mounting box**			
SURFACE MOUNTING BOX	M115(115x115mm)			**137.103** 1/12	
	M195(195x115mm)				**137.104** 1/12
	M95(95x95mm)	**137.101** 1/12			
	M95x2(195x95mm)		**137.102** 1/12		

Flush mounting - IP66 >> Control devices

				PROTECTA Series 137.			
Description	**Version**	**Current**	**Dimension**	**1 GANG**		**2 GANG**	
REVERSING SWITCH	WITH NEON	10AX	M95(95x95mm)	**137.3111**	1/12		
		20AX		**137.3112**	1/12		
DP SWITCH		20A		**137.3462**	1/12		
SP BELL PUSH SWITCH "BELL"		10A		**137.3311B**	1/12		
SP BELL PUSH SWITCH "PRESS"				**137.3311P**	1/12		
		20A		**137.3312P**	1/12		
SP ONE WAY SWITCH		10AX		**137.3011**	1/12	**137.3021**	1/12
		20AX		**137.3012**	1/12	**137.3022**	1/12
SP TWO WAY SWITCH		10AX		**137.3211**	1/12	**137.3221**	1/12
		20AX		**137.3212**	1/12	**137.3222**	1/12
PUSH BUTTON SINGLE POLE 2 GANG		10A				**137.3321**	1/12

- Flush mounting: box not included.

Flush mounting - IP66

				PROTECTA Series
				137.
Description	**Version**	**Current**	**Dimension**	**Spur units**
SPUR UNIT	WITH FUSE AND SWITCH	13A	M115(115x115mm)	**137.3410** 1/12

- Flush mounting: box not included.

IP66
Specifically high formulated gel seal to mantein protection degree when the plug is inserted

RJ45
Standard Ethernet

ITALIAN STANDARD P17/11 16A (bivalente)
Shuttered socket CEI 23-50

FRENCH STANDARD 16A
Shuttered socket

FRENCH-GERMAN STANDARD 16A
Shuttered socket

ITALIAN STANDARD P30 - 16A
Shuttered socket CEI 23-50

SWISS STANDARD 10A
Unshuttered socket SEV 1011:1998

ARGENTINIAN STANDARD 10A
Unshuttered socket

Flush mounting - IP66

Description	Version	Current	Dimension	Modular socket outlets	
RJ45 OUTLET	RJ45		M95(95x95mm)	**137.4481.50** [2]	1/12
GERMAN STANDARD SOCKET	GERMAN	16A		**137.4407**	1/12
	GERMAN UNSHUTTER			**137.4412** [1]	1/12
ITALIAN P30 STANDARD SOCKET	ITALIAN P30			**137.4404**	1/12
ITALIAN P17/11 STANDARD SOCKET	ITALIAN P17/11 (DUAL USE)			**137.4403**	1/12
FRENCH STANDARD SOCKET	FRENCH			**137.4411**	1/12
ARGENTINIAN STANDARD SOCKET	ARGENTINE	10A		**137.4424**	1/12
NEOZELANDER STANDARD SOCKET	NEW ZELAND			**137.4427**	1/12
SWISS STANDARD SOCKET	SWISS			**137.4417**	1/12
BRAZILIAN STANDARD SOCKET	BRAZILIAN			**137.4421**	1/12

PROTECTA Series
137.

[1] Shutterless socket, subject to normative restrictions or prohibitions in Europe or in other geographical areas. Check the national laws prior to using or installing it.
[2] RJ45 - Cat.5E
- Flush mounting: box not included.

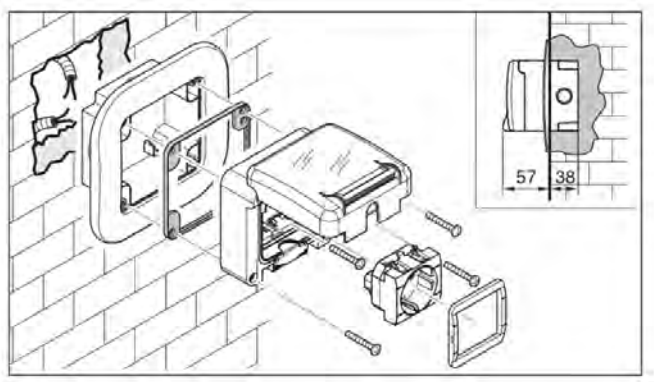

PROTECTA Series
Flush mounting

BRAZILIAN STANDARD 10A
Unshuttered socket ABNT NBR 14136:2002

NEW ZEALAND STANDARD 10A
Unshuttered socket AS/N25 3112

GERMAN STANDARD 16A
Unshuttered socket

Flush mounting - IP66

Description	Version	Current	Dimension	PROTECTA Series 137. BS socket outlets	
13A SOCKET + 20A DP SWITCH			M95x2(195x95mm)	**137.4003**	1/12
DOUBLE DP SWITCHSOCKET	BRITISH BS1363	13A	M195(195x115mm)	**137.4042**	1/12
				137.4043 [1]	1/12
DOUBLE UNSWITCHED SOCKET			M95x2(195x95mm)	**137.4002**	1/12
SINGLE DP SWITCHSOCKET			M115(115x115mm)	**137.4022**	1/12
SINGLE SP SWITCHSOCKET	BRITISH BS546	15A		**137.4111**	1/12
SINGLE UNSWITCHED SOCKET	BRITISH BS1363	13A	M95(95x95mm)	**137.4001**	1/12

[1] RCD protection (passive)

- Flush mounting: box not included.

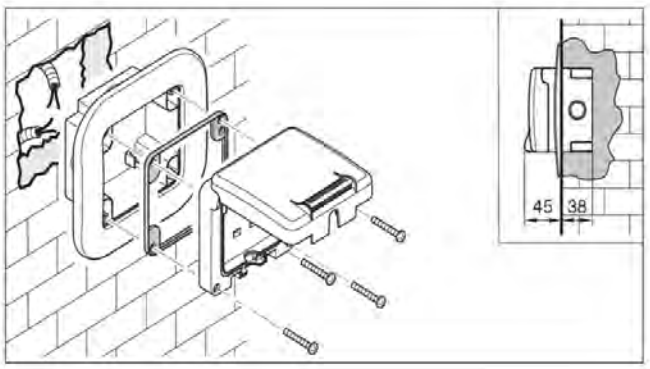

PROTECTA Series
Flush mounting (BS standard)

BRITISH STANDARD 15A
Shuttered socket BS 546

BRITISH STANDARD 13A
Shuttered socket BS 1363-2

IP66
Specifically high formulated gel seal to mantein protection degree when the plug is inserted

Flush mounting - IP66

PROTECTA Series

137.

Description	Dimension	Flush mounting box			
FLUSH MOUNTING BOX	M115(115x115mm)			**137.123** 1/12	
	M195(195x115mm)				**137.124** 1/12
	M95(95x95mm)	**137.121** 1/12			
	M95x2(195x95mm)		**137.122** 1/12		

APPLICATION EXAMPLE

Flush mounting - IP66

	PROTECTA Series
	137.
Description	**Dimension**	**Adapter M95**
ADAPTOR	M95(95x95mm)	**137.125** 12/120

- The IP55 degree of protection is obtained with the cover closed and with the item installed on smooth, impermeable walls without grooves (smooth tiles, marble).

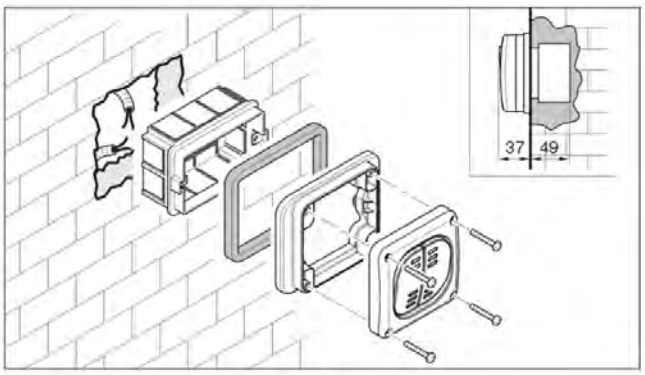

PROTECTA Series
Flush-mounting box adapter

Flush mounting - IP66

		PROTECTA Series 137.	
Description	**Dimension**	**Box**	
TOP POLE ENCLOSURE	M95(95x95mm)	**137.131** 1/12	
SIDE BY SIDE POLE			**137.141** 1/12

- Accepts SCAME EVOLUTION Series inserts.

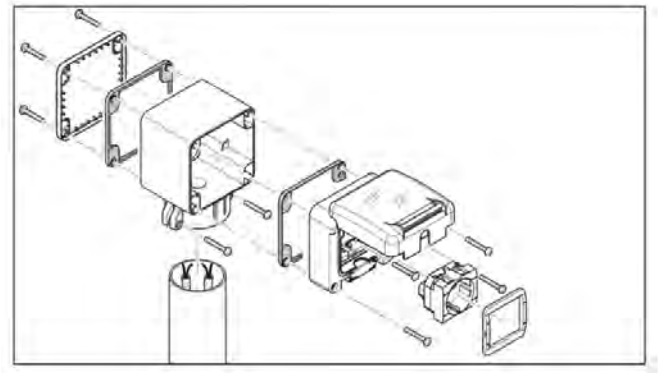

PROTECTA Series
Pole-top mounting

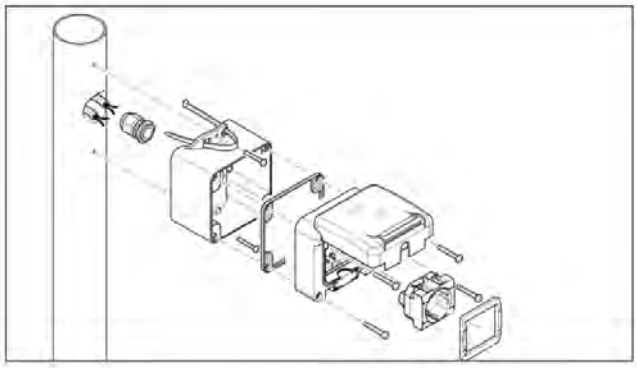

PROTECTA Series
Pole side by side mounting

Flush mounting - IP66

		PROTECTA Series
		137.
Description	**Dimension**	**Adapter 70x87mm**
PRE DRILLED COVER WITH FLANGE	M95(95x95mm)	**137.151** 1/12

- 70x87mm cut-outs

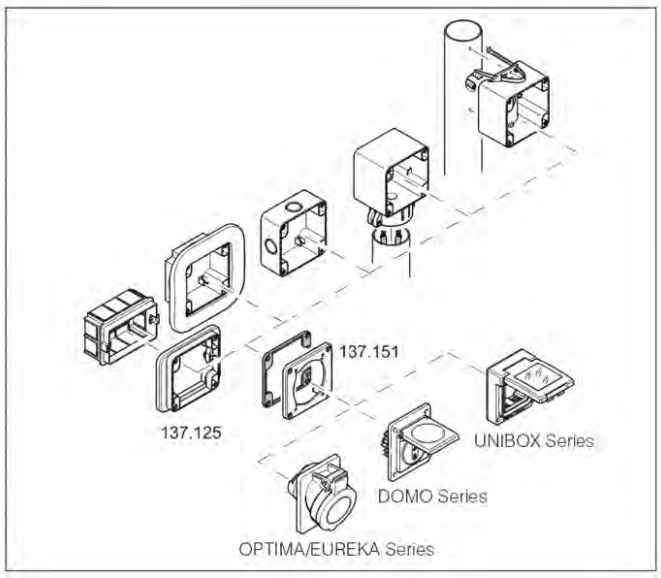

PROTECTA Series
Cover for M95 boxes with 70x87mm predrilling

Flush mounting - IP66

		PROTECTA Series	
		137.	
Description	**Dimension**	**Empty enclosure**	
EMPTY ENCLOSURE	M95(95x95mm)	**137.001** 1/12	**137.002** 1/12

- Accepts SCAME EVOLUTION Series inserts.

	PROTECTA Series		
	137.		
Description	**Accessories**		
EARTH TERMINAL		**137.201** 10/100	
LED 220V	**137.200** 10/100		
TPE SEAL			**137.202** 10/100

Empty box (surface mounting)

Without cover - IP40

		UNIBOX Series				
		136.				
		COVER FLANGE FOR MODULAR DEV.				
		IP40				
No. Modules	**Colour**	68x82x52mm		98x82x52mm	137x82x66mm	198x82x66mm
1 MOD.		**136.4121** 5/100				
2 MOD.			**136.4122** 5/100			
3 MOD.				**136.4123** 3/60		
2+2 MOD.					**136.4124** 1/24	
3+3 MOD.						**136.4126** 1/16

- Accepts SCAME EVOLUTION Series inserts.
- Glow-wire test: 650°C.
- Wall-mounting enclosures
- Cable inlet: 3 knock-outs Ø23 mm and one with cable gland PG16.
- Note: Versions pre-fitted with EVOLUTION Series inserts in RAL 7035 grey available upon request.

With cover - IP55 Soft transparent membrane

		UNIBOX Series				
		136.				
		COVER FLANGE FOR MODULAR DEV.				
		IP55				
No. Modules	**Colour**	68x82x66mm		98x82x66mm	137x82x66mm	198x82x66mm
1 MOD.		**136.5121** 5/80				
2 MOD.			**136.5122** 5/80			
3 MOD.				**136.5123** 3/60		
2+2 MOD.					**136.5124** 1/24	
3+3 MOD.						**136.5126** 1/16

- Accepts SCAME EVOLUTION Series inserts.
- Glow-wire test: 650°C.
- Wall-mounting enclosures
- Cable inlet: 3 knock-outs Ø23 mm and one with cable gland PG16.
- Note: Versions pre-fitted with EVOLUTION Series inserts in RAL 7035 grey available upon request.

Preassembled box

							UNIBOX Series
							136.
							IP40 - 3 MOD
IP	**Dimension**	**No. Modules**	**Colour**	**Volt**	**Switches**	**Sockets**	COVER FLANGE FOR MODULAR DEV.
IP40	98x82x52mm	3 MOD.		250V	1x16AX 1W S.P. SWITCH	1x13A BRITISH SOCKET	**136.4123-413** 50
						1x15A BRITISH SOCKET	**136.4123-414** 50
						1x16A FRENCH SOCKET	**136.4123-411** 50
						1x16A GERMAN SOCKET	**136.4123-412** 50

							UNIBOX Series
							136.
							IP55 - 1 MOD
IP	**Dimension**	**No. Modules**	**Colour**	**Volt**	**Switches**	**Sockets**	COVER FLANGE FOR MODULAR DEV.
IP55	68x82x66mm	1 MOD.		250V	1x16AX 1W S.P. SWITCH		**136.5121-303** 32/128
					1x16AX 2W S.P. SWITCH		**136.5121-323** 32/128
					1x16A S.P. PUSH BUTTON		**136.5121-333** 32/128
					1x20A D.P. SWITCH		**136.5121-302** 32/128
					1x20A D.P. SWITCH WITH NEON		**136.5121-304** 32/128
						1x16A SUISSE SOCKET	**136.5121-417** 32/128

Preassembled box

							UNIBOX Series 136.	
							IP55 - 2 MOD	
IP	**Dimension**	**No. Modules**	**Colour**	**Volt**	**Switches**	**Sockets**	COVER FLANGE FOR MODULAR DEV.	
					2x16AX 1W S.P. SWITCH		**136.5122-303**	32/128
					2x16AX 2W S.P. SWITCH		**136.5122-323**	32/128
						1x13A BRITISH SOCKET	**136.5122-413**	32/128
						1x15A BRITISH SOCKET	**136.5122-414**	32/128
IP55	68x82x66mm	2 MOD.		250V		1x16A FRENCH SOCKET	**136.5122-411**	32/128
						1x16A GERMAN SOCKET	**136.5122-412**	32/128
						1x16A GERMAN SHUTTERED SOCKET	**136.5122-407**	32/128
						1x10A NEW ZEALAND SOCKET	**136.5122-427**	32/128
						1x6-16A INDIAN SOCKET	**136.5122-429**	32/128

							UNIBOX Series 136.	
							IP55 - 3 MOD	
IP	**Dimension**	**No. Modules**	**Colour**	**Volt**	**Switches**	**Sockets**	COVER FLANGE FOR MODULAR DEV.	
					3x16AX 1W S.P. SWITCH		**136.5123-303**	24/96
					3x16AX 2W S.P. SWITCH		**136.5123-323**	24/96
						1x13A BRITISH SOCKET	**136.5123-413**	24/96
						1x15A BRITISH SOCKET	**136.5123-414**	24/96
IP55	98x82x66mm	3 MOD.		250V		1x16A FRENCH SOCKET	**136.5123-411**	24/96
						1x16A GERMAN SOCKET	**136.5123-412**	24/96
						1x16A GERMAN SHUTTERED SOCKET	**136.5123-407**	24/96
						1x6-16A INDIAN SOCKET	**136.5123-429**	24/96

Preassembled box

							UNIBOX Series	
							136.	
							IP55 - 2+2 MOD	
IP	**Dimension**	**No. Modules**	**Colour**	**Volt**	**Switches**	**Sockets**	COVER FLANGE FOR MODULAR DEV.	
IP55	137x82x66mm	2+2 MOD.		250V	1x16AX 1W S.P. SWITCH	2x13A BRITISH SOCKET	**136.5124-413**	1/24
						2x16A FRENCH SOCKET	**136.5124-411**	1/24
						2x16A GERMAN SOCKET	**136.5124-412**	1/24
						2x16A GERMAN SHUTTERED SOCKET	**136.5124-407**	24
					4x16AX 1W S.P. SWITCH		**136.5124-303**	1/24
					4x16AX 2W S.P. SWITCH		**136.5124-323**	1/24

							UNIBOX Series	
							136.	
							IP55 - 3+3 MOD	
IP	**Dimension**	**No. Modules**	**Colour**	**Volt**	**Switches**	**Sockets**	COVER FLANGE FOR MODULAR DEV.	
IP55	198x82x66mm	3+3 MOD.		250V	1x16AX 1W S.P. SWITCH	2x13A BRITISH SOCKET	**136.5126-413**	1/16
						2x16A FRENCH SOCKET	**136.5126-411**	1/16
						2x16A GERMAN SOCKET	**136.5126-412**	1/16
						2x16A GERMAN SHUTTERED SOCKET	**136.5126-407**	16
					6x16AX 1W S.P. SWITCH		**136.5126-303**	1/16
					6x16AX 2W S.P. SWITCH		**136.5126-323**	1/16

Empty box (panel mounting)

			UNIBOX Series	
			136.	
			[UNIBOX]	
			FLUSH MOUNTING FRAME	
Dimension	**No. Modules**	**Colour**	IP55	
120x98x28mm	3 MOD.		**136.5023**	85
			136.5023.AT	85

- The IP55 protection degree becomes IP20 when the cover is open.

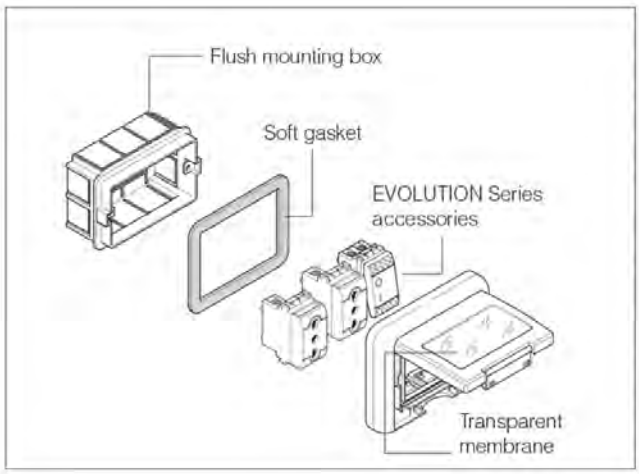

UNIBOX Series
Examples of installation (wall housing - IP55)

Empty box (panel mounting)

			ENCLOSURES ACCESSORIES
			654.
			[OMNIA]
			COVER WITH INSERT
Suitable for	**Colour**	**IP**	136x125mm
EVOLUTION		IP55	**654.0122** 6
BTICINO			**654.0121** [1] 6

[1] Manufactured with the autorization from Bticino spa company and is suitable to house “Living International”, “Luna”, “Light” and “Light Tech” modules which are registered trademarks owned by Bticino.

- Modules snap into place.

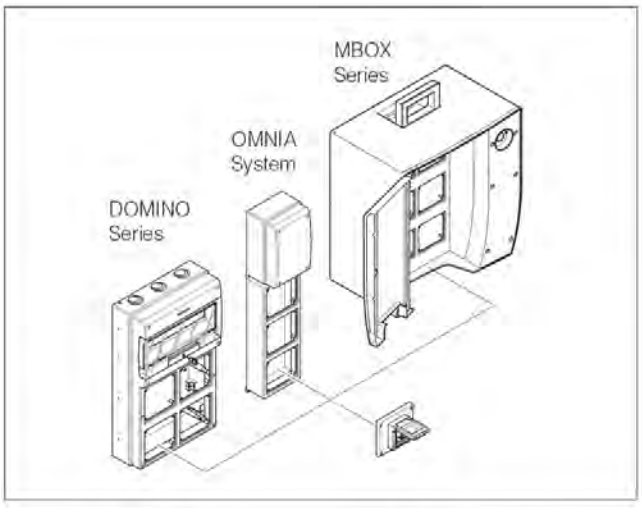

OMNIA Series
Examples of installation (flange 136x125mm)

Empty box (panel mounting)

			DOMO Series
			570.
			[DOMO]
			FLUSH MOUNTING FRAME
IP	**Suitable for**	**Colour**	70x87mm
IP55	EVOLUTION		**570.5052** 10/100
	BTICINO		**570.5012** [1] 10/100

[1] Manufactured with the autorization from Bticino spa company and is suitable to house “Living International”, “Luna”, “Light” and “Light Tech” modules which are registered trademarks owned by Bticino.

- Modules snap into place.

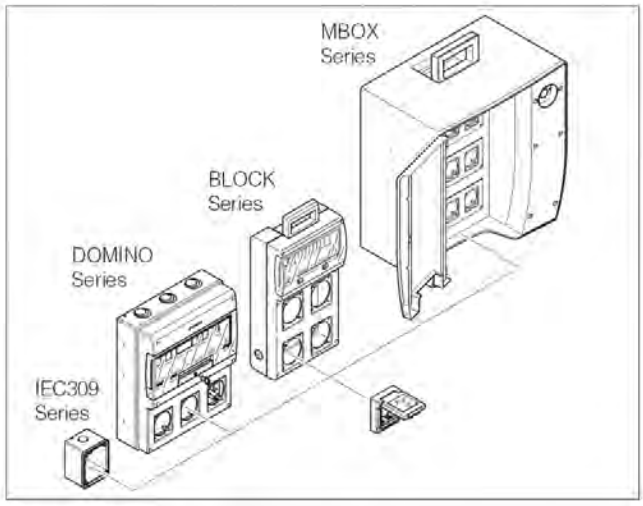

DOMO Series
Examples of installation (flange 70x87mm)

Enclosures for wiring accessories

	UNION Series	ENCLOSURES ACCESSORIES		UNIBOX Series
	805.	654.		136.

Accessories
For wall version

Colour	IP	Version	COUPLER	SEALING CAPS (12 pz.)	EARTH TERMINAL	WALL MOUNTING BRACKETS KIT
	IP66	LIGHT	**805.3334** 10/50			
				654.0080 [1] 10/100		**136.001** 10
					654.0376 20/200	

[1] For providing total insulation e according to EN 60439-1.

- Only for surface mounting enclosure.

Devices >> Covers and plates for push button

Description	Colour	EVOLUTION Series 101. Blank cover	Cable outlet
BLANK COVER 1 GANG		**101.6201.G** 100/800	
CABLE OUTLET 1 GANG			**101.6203.G** 100

Devices >> Control devices

Description	Version	Current	Volt	Colour	EVOLUTION Series 101. Switches
ONE WAY SWITCH	DOUBLE POLE	16AX	250V		**101.6302.G** 12/480
					101.6304.G 12/480
		20AX			**101.6302.20G** 12/480
					101.6304.20G 12/480
	SINGLE POLE	16AX			**101.6303.G** 12/480
		20AX			**101.6303.20G** 12/480
	SINGLE POLE WITH KEY	16A			**101.6301K.G** 6/240

Neon available as accessory.
Neon included

Description	Version	Current	Volt	Colour	EVOLUTION Series 101. Reversing switch
REVERSING SWITCH	SINGLE POLE	16AX	250V		**101.6311.G** 12/480

Neon available as accessory.

Devices >> Control devices

EVOLUTION Series

101.

Description	Version	Current	Volt	Colour	Two way switch
TWO WAY SWITCH	SINGLE POLE	16AX	250V		**101.6323.G** 12/480

Neon available as accessory.

EVOLUTION Series

101.

Description	Version	Current	Volt	Colour	Push button (NO)
PUSH BUTTON	DOUBLE POLE	16A	250V		**101.6332.G** 12/480 **101.6334.G** 12/480
	SINGLE POLE				**101.6333.G** 12/480
	FOR SHUTTERS - SINGLE POLE	10A			**101.63312.G** 12/480
	CORD OPERATED	16A			**101.6331T.G** 6/240

Neon available as accessory.

Neon included

EVOLUTION Series

101.

Description	Poles	Current	Volt	Colour	Miniature circuit breakers (MCB) 3kA
MCB	1P+N	6A	250V		**101.6340.06G** 12/480
		10A			**101.6340.10G** 12/480
		16A			**101.6340.G** 12/480

Devices >> Control devices

Description	Poles	Current	Volt	Colour	EVOLUTION Series 101. Miniature circuit breakers and residual current (RCBO) 3kA-10mA	
RCBO	1P+N	6A	250V		**101.6341.06G**	6/240
		10A			**101.6341.10G**	6/240
		16A			**101.6341.G**	6/240

Description	Volt	Colour	EVOLUTION Series 101. Fuse holder	
FUSE HOLDER	250V		**101.6345.G**	12/480

- Fuse 6,3x32

ITALIAN STANDARD P17/11 16A (bivalente)
Shuttered socket CEI 23-50

FRENCH STANDARD 16A
Shuttered socket

BRITISH STANDARD 15A
Shuttered socket BS 546

FRENCH-GERMAN STANDARD 16A
Shuttered socket

ITALIAN STANDARD P30 - 16A
Shuttered socket CEI 23-50

PLURISTANDARD P40 16A
Shuttered socket

BRITISH STANDARD 13A
Shuttered socket BS 1363-2

SWISS STANDARD 10A
Unshuttered socket SEV 1011:1998

Devices >> Socket-outlets

						EVOLUTION Series 101.	
Description	**Version**	**Poles**	**Current**	**Volt**	**Colour**	**For energy (european standard)**	
SOCKET	ITALIAN P17/11 (DUAL USE)	2P+E	16A	250V		**101.6403.R**	12/480
						101.6403.G	12/480
	FRENCH					**101.6411.G**	6/240
	BRITISH BS546		15A			**101.6414.G**	6/240
	GERMAN		16A			**101.6407.R**	6/240
						101.6407.G	6/240
	ITALIAN P30					**101.6404.R**	6/240
						101.6404.G	6/240
	ITALIAN P40					**101.6405.R**	6/240
						101.6405.G	6/240
	BRITISH BS1363		13A			**101.6413.G**	6/240
	SWISS		10A			**101.6417.G**	12/480
	ITALIAN P11					**101.6401.G**	12/480
	ITALIAN P17					**101.6402.G**	12/480
	GERMAN UNSHUTTER		16A			**101.6412.R** [1]	6/240
						101.6412.G [1]	6/240

[1] Shutterless socket, subject to normative restrictions or prohibitions in Europe or in other geographical areas. Check the national laws prior to using or installing it.

ITALIAN STANDARD
P11 - 10A
Shuttered socket CEI 23-50

ITALIAN STANDARD
P17 - 16A
Shuttered socket CEI 23-50

GERMAN STANDARD
16A
Unshuttered socket

Devices >> Socket-outlets

EVOLUTION Series

101.

Description	Version	Poles	Current	Volt	No. Modules	Colour	For energy (international standard)	
SOCKET	EUROAMERICAN	2P	15A	250V	1 MOD.		**101.6423.G**	12/480
ARGENTINIAN STANDARD SOCKET	ARGENTINE	2P+E	10A		1 MOD.		**101.6425.G**	12/480
							101.6424.G	6/240
			20A		2 MOD.		**101.6426.G**	6/240
NEOZELANDER STANDARD SOCKET	NEW ZELAND		10A				**101.6427.G**	6/240
SOUTH AFRICAN STANDARD SOCKET	SOUTH AFRICAN		16A				**101.6428.G**	6/240
INDIAN STANDARD SOCKET	INDIAN		6A 16A				**101.6429.G**	6/240
BRAZILIAN STANDARD SOCKET	BRAZILIAN		10A		1 MOD.		**101.6421.R**	12/480
							101.6421.G	12/480

EVOLUTION Series

101.

Description	Version	Current	Volt	No. Modules	Colour	DIN rail	
INDICATOR UNIT	DIN		250V	1 MOD.		**101.6541.2GD**	6
RJ45 OUTLET						**101.6481.50GD**	6
GERMAN STANDARD SOCKET		16A		2 MOD.		**101.6407.GD**	6
ITALIAN P40 STANDARD SOCKET						**101.6405.GD**	6
SINGLE UNSWITCHED SOCKET		13A				**101.6413.GD**	6
ITALIAN P17/11 STANDARD SOCKET		16A		1 MOD.		**101.6403.GD**	6
FRENCH STANDARD SOCKET						**101.6411.GD**	6
ARGENTINIAN STANDARD SOCKET		10A		2 MOD.		**101.6424.GD**	6
SOUTH AFRICAN STANDARD SOCKET		16A				**101.6428.GD**	6
SWISS STANDARD SOCKET		10A		1 MOD.		**101.6417.GD**	6

Neon available as accessory.

\- Insert mounted on DIN support.

EURO-AMERICAN STANDARD 15A
Shuttered socket

ARGENTINIAN STANDARD 10A
Unshuttered socket

BRAZILIAN STANDARD 10A
Unshuttered socket ABNT NBR 14136:2002

NEW ZEALAND STANDARD 10A
Unshuttered socket AS/N25 3112

SOUTH AFRICAN STANDARD 16A
Shuttered socket SANS 164:1 (2006)

INDIAN STANDARD 6/16A
Shuttered socket IS 1293:1988

Devices >> Socket-outlets

			EVOLUTION Series	
			101.	
Description	**Version**	**Colour**	**TV/SAT outlets**	
TV OUTLET	MALE		**101.6431.01G** [1]	12/480
			101.6431.10G [2]	12/480
			101.6431.G [3]	12/480
			101.6431.10 [2]	12/480
FM OUTLET	FEMALE		**101.6432.01G**	12/480
			101.6432.10G	12/480
			101.6432.G	12/480
SAT OUTLET			**101.6433.G**	12/480
TV-SAT OUTLET			**101.6434.G**	6/240

[1] Terminal 75Ω
[2] Attenuation 10dB
[3] Direct

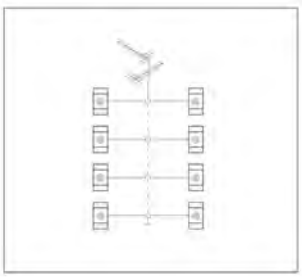

EVOLUTION Series
Terminal

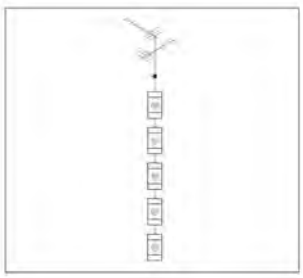

EVOLUTION Series
Attenuation

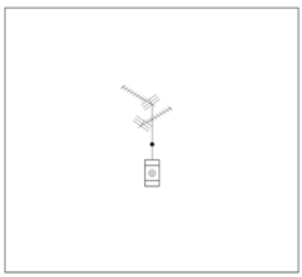

EVOLUTION Series
Direct

Devices >> Socket-outlets

Description	Version	Poles	Volt	Colour	EVOLUTION Series 101. Telephone outlets	
RJ11 OUTLET	TWIN				**101.6462.64G**	12/480
	6/4 PLUG				**101.6461.64G**	12/480
TELEPHONE OUTLET		2P	48V		**101.6464.G**	12/480

Description	Version	Colour	EVOLUTION Series 101. Data communication outlets (RJ45 - plug 8/8)	
RJ45 OUTLET	CAT.5 UNSHIELDED (UTP)		**101.6481.50G**	6/240
	CAT.5 SHIELDED (FTP)		**101.6481.51G**	6/240
	CAT.6 UNSHIELDED (UTP)		**101.6481.60G**	6/240
	CAT.6 SHIELDED (FTP)		**101.6481.61G**	6/240

Devices >> Signal devices

Description	Colour	EVOLUTION Series 101. Indicator units	
INDICATOR UNIT		**101.6541.1G**	12/480
		101.6541.2G	12/480
		101.6541.3G	12/480
		101.6542.G	12/480

Neon included

Support and accessories

			EVOLUTION Series	
			101.	
Description	**Volt**	**Colour**	**Neon lamps**	
NEON LAMPS	12V	NEUTRAL	**101.6200.12**	100
	24V		**101.6200.24**	100
	110V		**101.6200.11**	100
	230V		**101.6200**	100

Support and accessories

		ENCLOSURES ACCESSORIES	
		654.	
Description	**Suitable for**	**Support DIN**	
DIN RAIL BRACKET	1 x EVOLUTION	**654.0091** 12/120	
	2 x EVOLUTION		**654.0092** 12/120

EVOLUTION Series
EVOLUTION Series module mounted on DIN rail support

SCAME
electrical solutions

GENERAL CATALOGUE 2016-2018

technical sheets

Index

General technical informations
(in alphabetical order)

A

ADAPTO Series
Industrial adaptors

ADVANCE 2 Series
Interlocked switch socket outlets

ADVANCE 2 System
Modular system

ADVANCE-GRP System
Switched interlocked socket outlets

ADVANCE-GRP[AMR] System
Automated meter reading

ADVANCE-GRP[EX] Series

ADVANCE-GRP[GD] Series

ALUBOX Series
Junction boxes for electrical installations

ALUBOX-EX Series

AUTOROLLER Series
Cable reels with automatic rewind

AZZURRA Series
Domestic plugs, sockets, adaptors and multi-outlet sockets

B

BEEBOX Series
Empty distribution assemblies

BLOCK Series
Distribution assemblies

BLUELINE Series
Domestic plugs, sockets, adaptors and multi-outlet sockets

C

CABLO Series
Only available on the internet web site www.scame.com

COMMAND Series
Rotary switches

CONNECTO Series
Connecting accessories

CUBIK Series
Junction boxes forelectrical installations

CUBOX Series
Junction boxes for electrical installations

D

DATATEL Series
Components for TV/SAT, telephone installations and category 5E

DOMINO Series
Consumer units and enclosures

DOMO Series
Sockets for domestic applications

DOMOPLUS Series
Domestic standard sockets for industrial applications

E

EASYBOX Series
Weather-proof enclosures

EMERGENCY Series
Emergency call points

ENERBOX Series
Distribution assemblies

EUREKA Series
Industrial plugs and sockets

EUREKA[PIN&SLEEVE] Series
Heavy duty industrial
plugs and sockets

EVOLUTION Series
Plates and devices

EVOLVE Series

F

FASTY Series
Only available on the internet
web site www.scame.com

FIXER Series
Conduit fixing accessories

FIXO Series
Only available on the internet
web site www.scame.com

FLAT Series
Flush mounting
consumer units

G

GEA Series

G

GOMMA Series
Distribution assemblies

H

HALE Series
Light fittings

HYDRA Series
Light fittings

I

IEC309 Series
Only available on the internet
web site www.scame.com

INNOVA Series

ISOLATORS-AL Series
Aluminium enclosure
16A-160A

ISOLATORS-EX Series

ISOLATORS-EX[GD] Series

ISOLATORS-HD Series
Heavy duty engineering
plastic insulated enclosure
20A-40A

ISOLATORS-HR Series
High rating hinged sheet steel
enclosure - 200A-1600A

ISOLATORS-INOX Series
Stainless steel enclosure
16A-160A

ISOLATORS-PH Series
Photovoltaic/dc switch
disconnectors thermoplastic
insulated enclosure
10A-40A (800V DC)

See specific catalogue

Index

ISOLATORS-SWITCH Series
Enclosed change-over switches I/O/II - 16A-160A

ISOLATORS-TP Series
Thermoplastic insulated enclosure - 16A-160A

K

KIOSK Series
Distribution pedestals terminals

KOMPAS Series

L

LIBERA Series

LUX Series
Lampholder

LUXURY Series

LV-LUX Series
Only available on the internet web site www.scame.com

M

MBOX Series
Distribution assemblies

MEGA Series
Distribution assemblies

METALCLAD Series

MIZAR Series
Light fittings

N

NEXTA Series

O

OMNIA Series
Interlocked switch socket outlets

OMNIA System
Flush and surface mounting modular system

OMNIAPLUS Series
Domestic interlocked socket

OPTIMA Series
Industrial plugs and sockets

OPTIMA-BASE-TOP-COMBI Series
Industrial surface mounting socket outlets

OPTIMA-EX Series

OPTIMA-EX[GD] Series

OPTIMA-HD Series
Plugs and connectors for demanding applications

OPTIMA-METAL Series
Screened, dust and watertight metallic connectors

OPTIMA-REVERSE Series
Plugs with phase inverters

OPTIMA-SEVEN Series
Industrial plugs and sockets

P

PROTECTA Series
Weatherproof switches and sockets

R

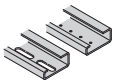

RAILDIN Series
Only available on the internet web site www.scame.com

ROLLER Series
Industrial cable reels

S

SALVAMOTORE Series
Only available on the internet web site www.scame.com

SCABOX Series
Junction boxes for electrical installations

SICURA Series
Multi-outlet sockets

SMART Series
Conduit installation accessories

SPYROS Series
Only available on the internet web site www.scame.com

T

TIES Series
Cable ties

TOP22 Series
Control and signalling accessories

TRANSFORMER Series
Only available on the internet web site www.scame.com

TREND Series
Multi-outlet sockets

TRIS Series
Domestic cable reels

TUBE Series
Conduit installation accessories

U

UNEL Series
Domestic plugs and sockets

UNIBOX Series
Enclosure for wiring accessories

UNION Series
Cable glands

UNION-EX Series

W

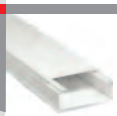

WADO Series
Trunking Systems

WBOX Series
Flush mounting boxes

X

XENIA Series
Industrial plugs and sockets

Z

ZENITH-P Series

Note: all technical sheets are also avilable on the internet web-site www.scame.com in the section “InfoTECH”.

See specific catalogue

General technical informations

DEGREES OF PROTECTION FOR ENCLOSURES (IP CODE) EN 60529

These standards apply to enclosures for electrical material with a rated voltage not exceeding 72.5 KV.

The second edition of these standards does generally change the IP degrees, but clarifies some aspects that were not completely clear in the previous edition.

According to these standards, the IP degree of protection should be used exclusively with the 2 defining numbers and the additional letters provided for by the standards.

These are defined as follows:

1ST NUMBER

Protection for people from contact with hazardous parts (see also ADDITIONAL LETTER) and protection of equipment from the entry of solid foreign bodies.

IP	Solid foreign objects	Access to hazardous parts	
0			No protection
1	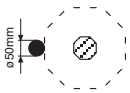	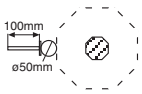	Protection from solid objects larger than 50 mm (eg accidental contact of the hand)
2	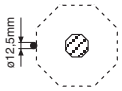	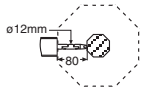	Protection from solid objects larger than 12 mm (eg the finger of a hand)
3	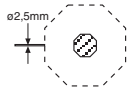	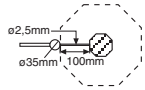	Protection from solid objects larger than 2.5 mm (eg tools, wires)
4	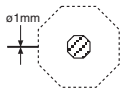		Protection from solid objects larger than 1 mm (eg fine tools and small wires)
5	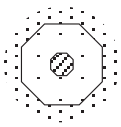	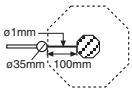	Protection from dust (no harmful deposits)
6	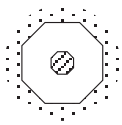		Completely protected from dust

2ND NUMBER

Protection of equipment from water entry.

IP	Test	
0		No protection
1		Protected from vertically falling water drops
2	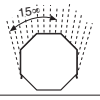	Protected from vertically falling water drops at up to 15° from the vertical
3	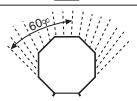	Protected from vertically falling water drops at up to 60° from the vertical (rain)
4	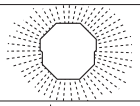	Protected from splashing water in all directions
5	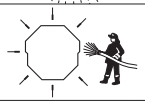	Protected from jets of water in all directions
6	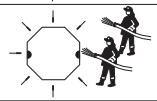	Protected from jets of water similar to heavy seas
7	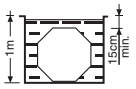	Protected from the effects of immersion
8		Protected from the effects of submersion
9		Protected from high pressure or high temperature jets of water

ADDITIONAL LETTER

To be used when the protection of people from hazardous parts is higher than that demanded by the first number for protection from the entry of solid objects.

Letter	Definition	
A	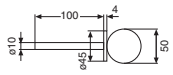	Protected from access with the back of the **hand**. The access probe, spherical 50 mm Ø, should have adequate clearance from hazardous parts.
B	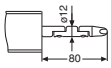	Protected from access with a **finger**. The joined test finger of 12 mm Ø and 80 mm long should have adequate clearance from hazardous parts.
C	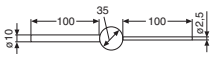	Protected from access with a **tool**. The access probe of 2.5 mm Ø, 100 mm length should have adequate clearance from hazardous parts.
D	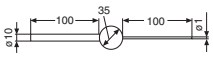	Protected from access with a **wire**. The access probe of 1.0 mm Ø, 100 mm length should have adequate clearance from hazardous parts.

SUPPLEMENTARY LETTER

Used to supply additional information about the material.

Letter	Definition
H	High-voltage apparatus
M	Tested for harmful effects due to water entry when the movable parts (eg the rotor of a rotating machine) are in motion.
S	Tested for harmful effects due to water entry when the movable parts (eg the rotor of a rotating machine) are stationary.
W	Suitable for use under specified weather conditions and provided with additional protective features or processes.

General technical informations

INDUSTRIAL PLUGS AND SOCKETS TO IEC 60309 RATED OPERATING VOLTAGE >50 V

Clock face position

Viewing the socket from the front, the clock face position h is established by observing the position of the earth contact with respect to the major keyway, which is always situated at 6 o'clock.

The different voltages are identified by conventional colour codes.

Clock reference:

All the versions required by the IEC 60309 standard are available, including the more specific:

Examples:

- standard use ..... **h 6**
- refrigerated container ..... **h 3**
- marine, port or ship installation ..... **h 11**
- direct current (2P + E) ..... **h 3 and 8**
- supply by isolation transformer (TST) ..... **h 12**
- high frequency, from 100 to 300 Hz ..... **h 10**
- high frequency, from 300 to 500 Hz ..... **h 2**
- specific voltages 100 - 130V ..... **h 4**
  480 - 500V ..... **h 7**
  600 - 690V ..... **h 5**

COLOUR CODE

The operating voltages are identified by conventional colours as shown in the table:

Rated operating voltage V	Colour 1)
from 20 to 25	Violet
from 40 to 50	White
from 100 to 130	Yellow
from 200 to 250	Blue
from 380 to 480	Red
from 500 to 1000	Black

1) Combinations of green with the colour of the rated operating voltage can be used to identify frequencies between 60 Hz and 500 Hz inclusive.

Clock position - IEC ratings - Series I

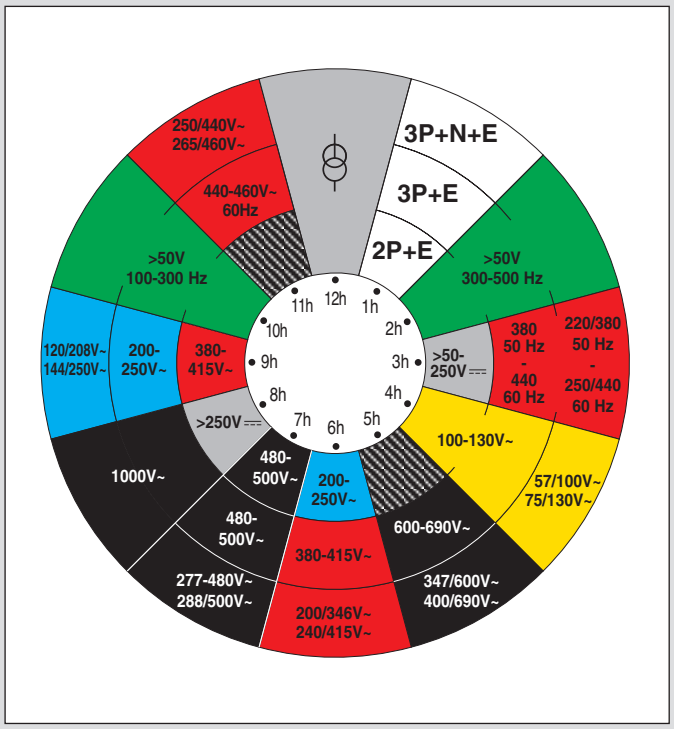

CLOCK DIAGRAM

Clock face position (**h**) of the earth pole of low voltage (>50 V) industrial plugs and sockets to IEC 60309-2 for different applications (polarity, voltage, frequency, current).

⎓ = Supply from isolation transformer

SOCKET (front view)

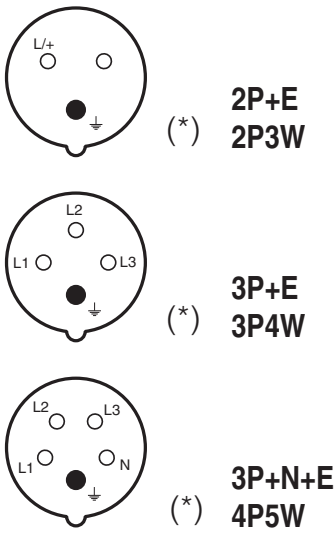

(*) Major keyway

SYNOPTIC TABLE OF STANDARD INDUSTRIAL PLUGS AND SOCKETS TO IEC 60309-2

Rated operating voltage > 50 V (LV)

Number of contact	Poles	Frequency Hz	Rated operating voltage V	Clock face pos. (h) Earth contact (1)		Colour code
				16/20A 32/30A	63/60A 125/100A	
3 Contact 2P3W	1P+N+E II Series	50 and 60	100÷130	4	4	
		60	277	5	5	
	2P+E I and II Series	50 and 60	100÷130	4	4	
			200÷250	6	6	
			380÷415	9	9	
			480÷500	7	7	
			suppl. by isol. transf.	12	12	- (5)
		100÷300	> 50	10	10	(4)
		>300÷500	> 50	2	2	(4)
		d.c.	>50÷250	3	3	- (5)
			> 250	8	8	- (5)
4 Contact 3P4W	2P+N+E II Series	50 and 60	125/250	12	12	
	3P+E I and II Series	50 and 60	100÷130	4	4	
			200÷250	9	9	
			380÷415	6	6	
		60	440÷460 (4)	11	11	
		50 and 60	480÷500	7	7	
			600÷690	5	5	
		50 60	380 440 (3)	3	3	
		50 and 60	1000	8	8	
		100÷300	> 50	10	-	(4)
		>300÷500	> 50	2	-	(4)
5 Contact 4P5W	3P+N+E I and II Series	50 and 60	57/100÷75/130	4	4	
			120/208÷144/250	9	9	
			200/346÷240/415	6	6	
			277/480÷288/500	7	7	
			347/600÷400/690	5	5	
		60	250/440÷265/460 (4)	11	11	
		50 60	220/380 250/440 (3)	3	3	
		50 and 60	1000	8	8	
		50 and 60	suppl. by isol. transf.	12	12	
		100÷300	> 50	10	10	(4)
		>300÷500	> 50	2	2	(4)
ALL TYPES		All types of voltage and/or frequency not within these standardised configurations		1	1	-

(1) The positions shown by a dash (-) are not standardised
(2) For ISO standard refrigerated containers
(3) Mainly for shipboard installations
(4) Combinations of green with the colour of the rated operating voltage can be used to identify frequencies between 60 Hz and 500 Hz inclusive.
(5) Plugs and sockets for which the IEC 60309-2 standard sets only the clock face position (h) of the earth contact and not the colour, are supplied by SCAME in RAL 7035 grey

SERIES I AND SERIES II

Series I and Series II have more or less the same dimensions, but are classified according to different rated currents. For Series I, currents are 16A, 32A, 63A, and 125A and for Series II, rated currents are 20A, 30A, 60A and 100A.
Series I products are used in all European countries and some countries in South America, Asia, Australia and Africa. On the contrary, Series II products are mainly marketed in North America (USA, Mexico and Canada) and some countries in South America.

NOTE

• SCAME plugs and sockets for specific uses other than 4 - 6 - 9 h are available only on demand and are therefore not kept in stock. Minimum order quantities: 50 pieces.

General technical informations

SYNOPTIC TABLE OF STANDARD INDUSTRIAL PLUGS AND SOCKETS TO IEC 60309-2

Rated operating voltage <50V~ (ELV)

Poles	Frequency Hz	Rated operating voltage V	Minor keyway (1) clock face position (h) 16A and 32A without reference	Colour code
2P	50 and 60	20÷25	without ref.	
	50 and 60	40÷50	12	
	100÷200	20÷25 e 40÷50	4	(2)
	300		2	(2)
	400		3	(2)
	>400÷500		11	(2)
	c.c.		10	
3P	50 and 60	20÷25	without ref.	
	50 and 60	40÷50	12	
	100÷200	20÷25 e 40÷50	4	(2)
	300		2	(2)
	400		3	(2)
	>400÷500		11	(2)
	c.c.	25	8	(3)

(1) 1, 8 and 9 h positions are reserved for future standards; 5, 6 and 7 h positions cannot be used for reasons connected with the design.
(2) Combinations of green with the colour of the rated operating voltage can be used to identify frequencies between 60 Hz and 500 Hz inclusive.
(3) Portable electric incubators - use at 12 Vd.c. or 24 Vd.c. on ambulances or helicopters.

SOCKET (front view)

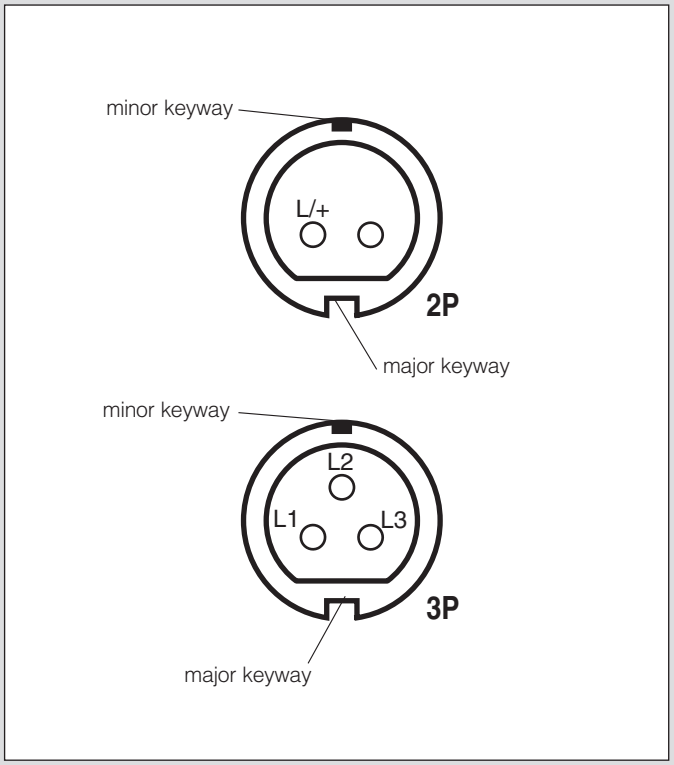

Clock face position
Viewing the socket from the front, the clock face position h is established by observing the position of the minor keyway with respect to the major keyway, which is always situated at 6 o'clock.
The different voltages are identified by conventional colour codes.

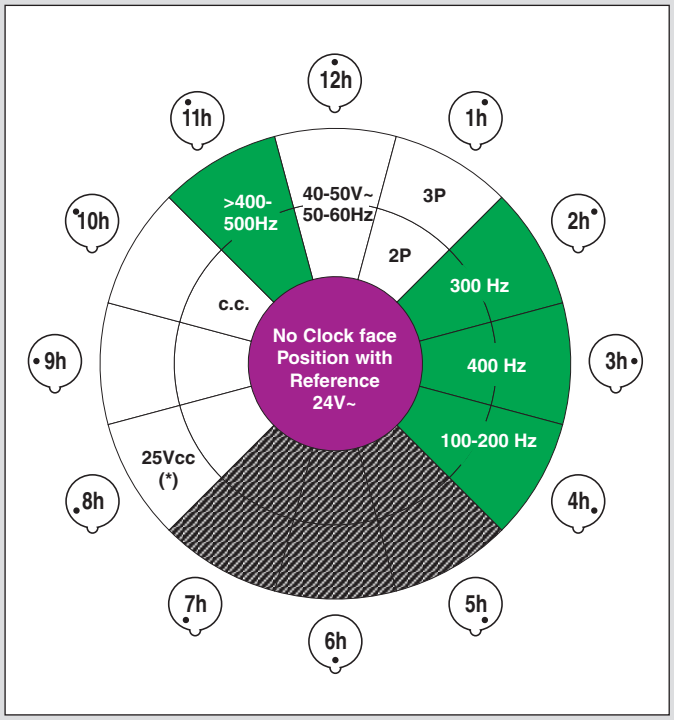

Clock diagram
Clock face position (h) of the minor keyway of extra-low voltage (<50 V) industrial plugs and sockets to IEC 309-2 for different applications (polarity, voltage, frequency, current).

(*)
Portable electric incubators - use at 12 Vd.c. or 24 Vd.c. on ambulances or helicopters.

APPLICATIONS OF INDUSTRIAL PLUGS AND SOCKETS

	IP44	IP67
Agriculture	Mobile or portable equipment or appliances used or stored on sheltered premises.	Outdoor installation of pumping, ventilation, drying equipment.
Chemical industry	Indoors on premises for storage and maintenance purposes where connections are not exposed to the risk of immersion or chemicals.	On premises without risk of explosions but where the connections are exposed to chemicals and subject to possible immersion.
Construction sites and shipyards	On covered construction sites sheltered against weathering but exposed to splashing with water.	On outdoor construction sites where the connections are left on damp ground exposed to freezing, dust and weathering.
Sports complexes and other places of public entertainment, TV and film studios	On sheltered premises protected against the weather, though exposed to splashing, without high connected loads.	Outdoor connections exposed to rain, snow, mud, freezing and other critical weather conditions. Where mated safety is required. Where high voltage for lighting installations, T.V. and audio are foreseen.
Food industry	In sheltered locations, on indoor premises used for storage and maintenance.	In locations subject to washing by hosing down and where connections are subject to heavy duty.
Heavy industry	In sheltered warehouses, maintenance workshops, assembly and moulding areas.	In rolling mills, foundries, blast furnaces, etc., where the connections are exposed to dust, metallic shavings, coolants and are subject to vibrations and impact.
Light industry	Locations without high humidity or ambient pollution serving for assembly, moulding, maintenance and storage	On premises subject to cleaning by means of chemical solvents. Also where heavy loads require high safety in connections.
Installations for IT centres	For electrical connections executed above floor level.	For electrical connections under raised floors with risk of immersion. Where heavy loads require high safety in connections.
Ports	In sheltered locations such as docks, repair shops, offices, etc.	Quays, docks, piers, etc. where there is risk of high waves and partial flooding.
Airports	In sheltered locations, hangars, repair shops, warehouses.	Outdoors for connection between mobile or portable appliances and aircraft.
Water treatment plants	Indoor use in repair shops, etc.	In all locations with risk of flooding and for outdoor use with pumps, aeration and ventilation systems.

Integrated systems

INTEGRATED SYSTEMS FOR ELECTRICAL INSTALLATIONS

Scame produces three integrated systems for assembling weatherproof electrical distribution and connection installations:
- **DOMINO System** a modular system of enclosures for distribution assemblies and consumer units
- **ADVANCE 2 System** a modular system for combination units
- **OMNIA System** a modular flush and surface mounting system

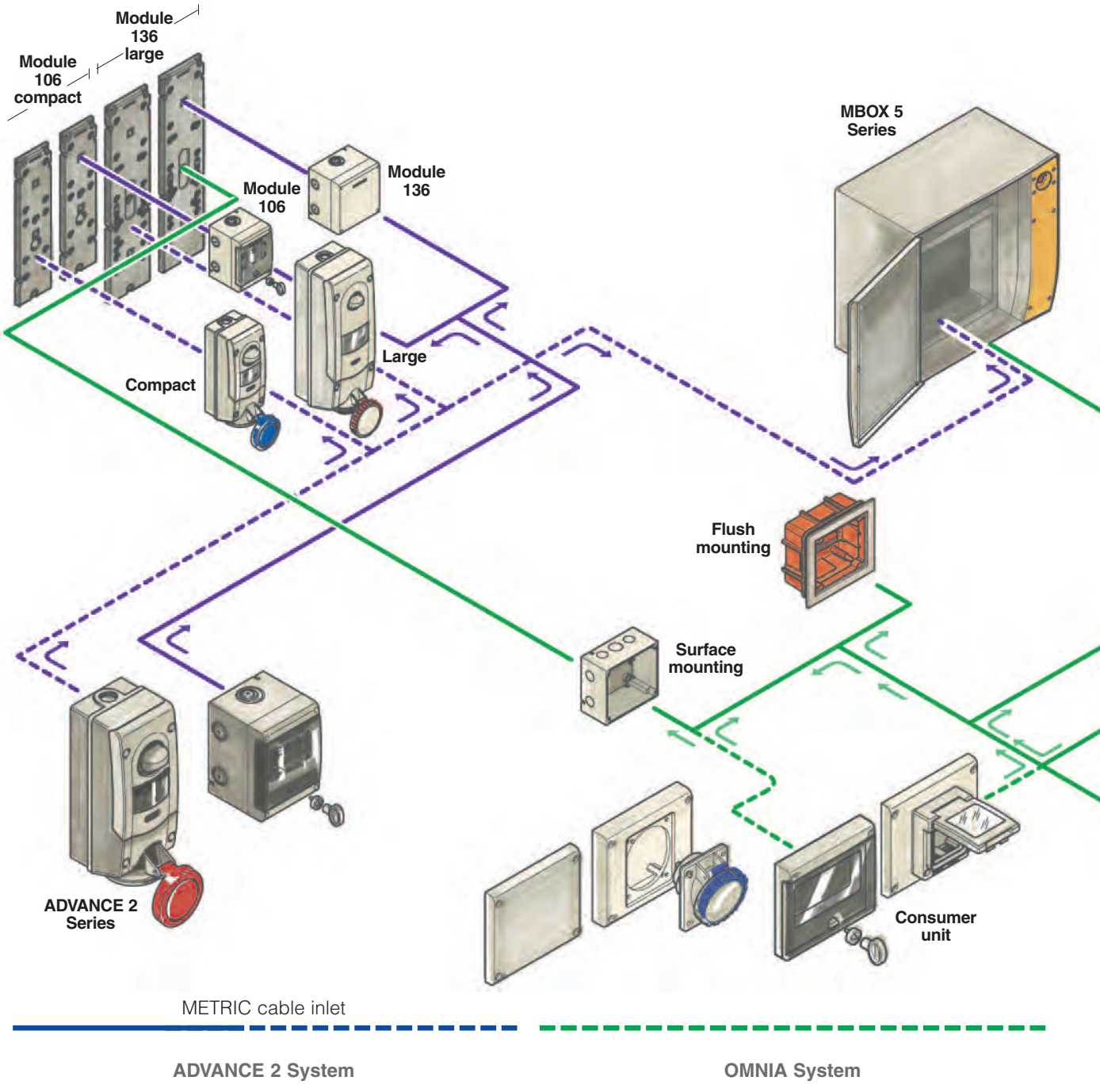

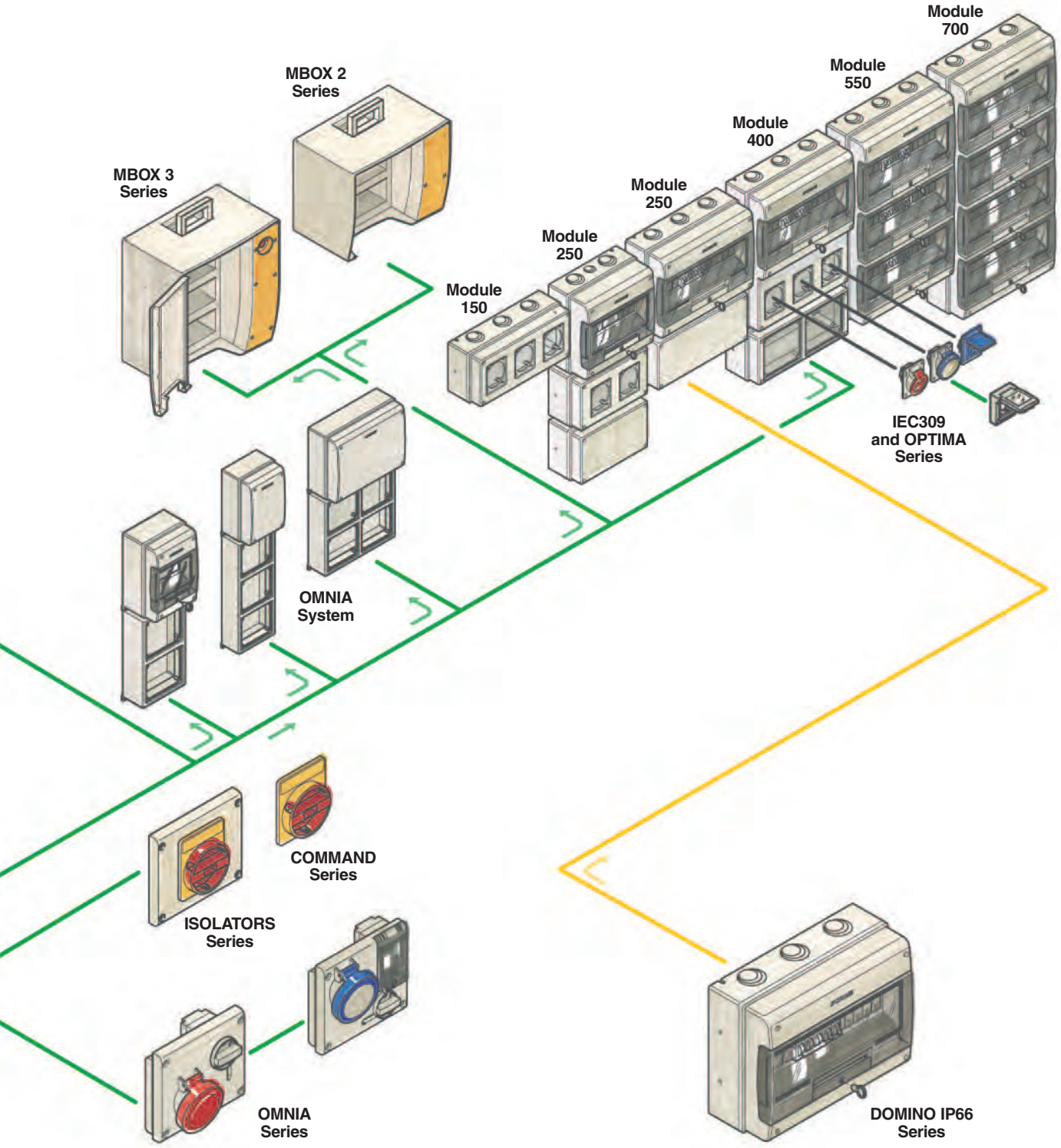

OMNIA Series

DOMINO System

Integrated systems

MBOX Series

MBOX2

656.0024-000

MBOX3

657.0035-000
657.0036-000
657.0037-000

MBOX5

658.0050-000
658.0051-000

DOMINO Series

8 DIN

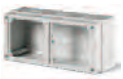

672.1200

672.2200

12 DIN

672.3200

16 DIN

672.4216

16 DIN

672.5316

16 DIN

672.5416

24 DIN

672.5522

24 DIN

672.5622

OMNIA Series

6 DIN

572.0311

572.0312

6 DIN

572.0313

572.0200

14 DIN

572.0314

572.0315

572.0316

572.0220

572.0310
572.M0310

572.M0308

572.0322

ADVANCE 2 Series

Module 106
(compact)

Module 136 (large)
HD Version

OMNIA Series

ADVANCE 2 System

STANDARD VERSION

Flange 70x87

Module 106 (compact)	12	576.4300	12	576.4303	12	576.4301	6	576.4304	6	576.4302	6	576.4305
Module 136 (large)	6	576.4340	12	576.4323	12	576.4321	6	576.4324	6	576.4322	6	576.4325

HEAVY DUTY VERSION

Module 106 (compact)	12	578.4300			12	578.4301	6	578.4304	6	578.4302	6	578.4305
Module 136 (large)	6	578.4340			12	578.4321	6	578.4324	6	578.4322	6	578.4325

MBOX Series

MBOX2

656.0026-000

MBOX3

657.0038-000
657.0039-000

DOMINO Series

672.1301

672.1300

8 DIN

672.2300

8 DIN

672.2301

12 DIN

672.3300

12 DIN

672.3302

16 DIN

672.4316

16 DIN

672.5616

24 DIN

672.5622

24 DIN

672.5822

OPTIMA Series

BLOCK Series

4 DIN

632.1500-000

6 DIN

632.3500-000

6 DIN

632.3520-000

6 DIN

632.3530-000

632.3501-000

10 DIN

632.4500-000

10 DIN

632.4520-000

10 ½ DIN

632.4530-000

14 DIN

632.5520-000

14 DIN

632.5500-000

INDUSTRIAL ADAPTORS

VERSIONS

One-way adaptors

2-way adaptors with interlocked-switch socket outlets

2-way adaptors

3/5-way adaptors

3-way adaptors with protection devices

4-way adaptors

TECHNICAL CHARACTERISTICS

Rated current:	**16A-32A**
Frequency:	**50Hz**
Insulating voltage:	**500/690V~**
Protection degree:	**IP20-IP44-IP66-IP67**
Operating ambient temperature according to the reference standard:	**-25°C +40°C**
Max. operating ambient temperature:	**60°C**
Glow Wire test:	**650°C/750°C/850°C**
Material:	**Engineering plastic**
IK degree at 20°C:	**IK06 - IK09**

BEHAVIOUR WITH CHEMICAL AND ATMOSPHERIC AGENTS

Saline solution	Acids		Bases		Solvents				Mineral oil	UV rays
	Concentrated	Diluted	Concentrated	Diluted	Hexane	Benzol	Acetone	Alcohol		
Resistant	Not Resistant	Not Resistant	Limited Resistance	Resistant	Not Resistant	Not Resistant	Not Resistant	Limited Resistance	Resistant	Resistant

AVAILABLE STANDARDS

ITALIAN STANDARD P17/11 - 16A
Shuttered socket
CEI 23-50

ITALIAN STANDARD P30 - 16A
Shuttered socket
CEI 23-50

PLURISTANDARD P40 - 16A
Shuttered socket
CEI 23-50

BRITISH STANDARD - 13A
Shuttered socket
BS 1363-2

FRENCH STANDARD - 16A
Shuttered socket
NFC 61-314

BRITISH STANDARD - 15A
Shuttered socket
BS 546

ARGENTINIAN STANDARD - 10A
Unshuttered socket
IRAM 2071

NEW ZEALAND STANDARD - 10A
Unshuttered socket
AS/N25 3112

SOUTH AFRICAN STANDARD - 16A
Shuttered socket
SANS 164:1 (2006)

APPLICATION EXAMPLES

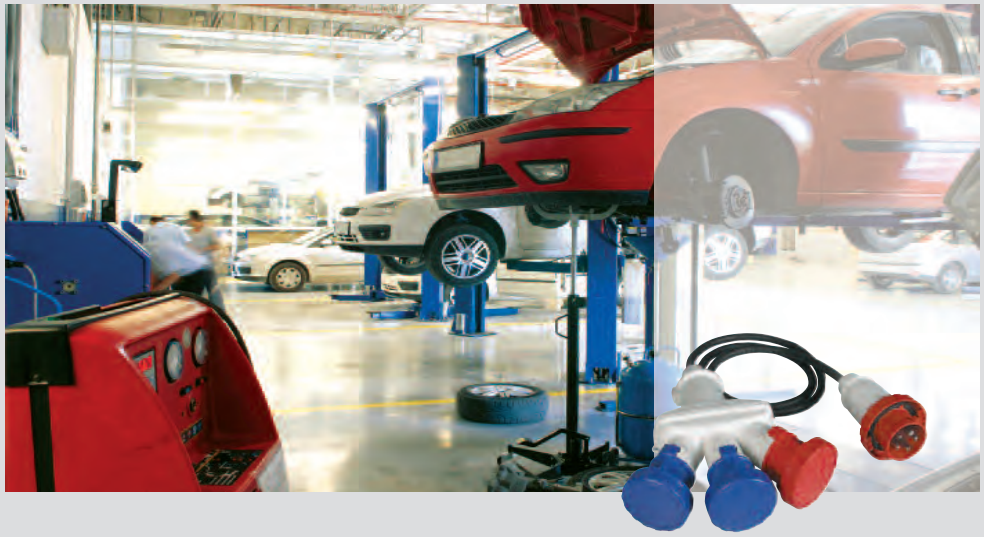

INTERLOCKED SWITCH SOCKET OUTLETS

VERSIONS

Without fuse carrier

With fuse carrier

With fuse carrier - HD

With DIN rail (6 modules)

With DIN rail (6 modules) - HD

REFERENCE STANDARDS

EN 60309-1
Plugs, socket outlets and couples for industrial purposes.
Part 1: general requirements.

EN 60309-2
Plugs, socket outlets and couples for industrial purposes.
Part 2: dimensional interchangeability requirements for pin and contact-tube accessories of harmonised configurations.

EN 60309-4
Plugs, socket-outlets and couplers for industrial purposes.
Part 4: switched socket-outlets and connectors with or without interlock.

QUALITY MARKS

TECHNICAL CHARACTERISTICS

Rated current:	**16A-32A-63A**
Rated voltage:	**100÷690V~**
Frequency:	**c.c. - 50÷500Hz**
Insulating voltage:	**500/690V~**
Protection degree:	**IP44-IP66/IP67**
Operating ambient temperature according to the reference standard:	**-25°C +40°C**
Max. operating ambient temperature:	**60°C**
Glow Wire test:	**650°C/850°C**
Material:	**Engineering plastic**
IK degree at 20°C:	**IK07 (Advance2)** **IK08 (Advance2-HD)**
Cable inlets:	**Metric**
Fuse-carriers:	**gG 10,3x38mm (16-32A)** **Neozed type D02 (63A)**
Colour:	**Standard socket** Grey RAL 7035 front side and smoke-grey plate **Heavy Duty socket** Blue RAL 5015 front side and dark-grey RAL 7004 body
Insulation class:	**Class II (double insulation)** ⧈

BEHAVIOUR WITH CHEMICAL AND ATMOSPHERIC AGENTS - STANDARD SOCKET

Saline solution	Acids		Bases		Solvents				Mineral oil	UV rays
	Concentrated	Diluted	Concentrated	Diluted	Hexane	Benzol	Acetone	Alcohol		
Resistant	Limited Resistance	Resistant	Limited Resistance	Resistant	Non Resiste	Non Resiste	Non Resiste	Limited Resistance	Limited Resistance	Resistant

BEHAVIOUR WITH CHEMICAL AND ATMOSPHERIC AGENTS - HD SOCKET

Saline solution	Acids		Bases		Solvents				Mineral oil	UV rays
	Concentrated	Diluted	Concentrated	Diluted	Hexane	Benzol	Acetone	Alcohol		
Resistant	Limited Resistance	Resistant	Limited Resistance	Resistant	Resistant	Limited Resistance	Non Resiste	Resistant	Resistant	Resistant

WIRING AND INSTALLATION

Wiring capacity of the terminals
Cross-section of the connectable conductors (mm²)

Rated current (A)	Socket outlets	
	Min	Max
16A	1,5	4
32A	2,5	10
63A	6	25

APPLICATION EXAMPLES

CABLE INLETS

Compact version 16A and 32A
1 M25 threaded on upper side
2 marks for M20 on lower side
1 mark on the back

Provided with cable gland M25

Large version 16A and 32A
1 M25 threaded on upper side
3 marks for M20-M32 on lower side
1 mark on the back

Provided with cable gland M25

Large version 63A
1 M40 threaded on upper side
3 marks for M20-M32 on lower side
1 mark on the back

Provided with cable gland M40

TECHNICAL DATA SWITCH DISCONNECTORS

						With fuse		Without fuse		
						16A	32A	16A	32A	63A
Rated insulation voltage **Ui**					Vac	690	690	690	690	690
					Vdc	600	600	600	600	-
Rated impulse withstand voltage **Uimp**					kV	4	4	4	4	8
Thermal current **Ith**					A	25	32	30	40	63
Thermal current **Ithe**					A	25	32	30	40	63
Nominal current rating IEC	**AC21A**	Resistite loads, inluding moderate overloads		400V	A	-	-	-	-	-
				500V	A	-	-	-	-	-
				690V	A	25	32	30	32	63
	AC22A	Mixed resistite and inductive loads, including moderate overloads		400V	A	-	-	-	-	-
				500V	A	-	-	-	-	-
				690V	A	30	32	20	32	63
	AC23A	Switching off motor loads or other highly inductive loads (3 phase/3 pole)		400V	A	-	-	20	32	50
				500V	A	-	-	-	-	40
				690V	A	16	25	16	25	30
	AC3	Squirrel-cage motor: starting, switching off motor during running (3 phase/ 3 pole)		400V	A	-	28,5	-	28,5	40
				690V	A	12	20	12	20	25
	DC21A	Resistite loads, including Moderate overloads		300V	A	25	32	25	32	-
	DC22A	Mixed resistite and inductive loads, including moderate overloads		250V	A	20	32	20	32	-
				600V	A	-	-	10(*)	10(*)	-
Rated short-time withstand current **Icw** (1s)					A	400	400	400	400	1500
Short-circuit protection:	Conditional short-circuit current				kA	10	10	10	10	10
	Associate fuse size for conditional short-circuit current - Type gG			500V	kA	16	32	16	32	63
	Rated short-circuit making capacity **Icm**				kA	1500	1500	1500	1500	2850
UL rating	General use single phase and 3 phase			600V	A	20	30	32	40	63
	AC motor starting break all line single phase			120V	Hp	1,5	2	1,5	2	3
				240V	Hp	3	5	3	5	7,5
	AC motor B, C, D starting break all lines three phase			240V	Hp	7,5	10	7,5	10	10
				480V	Hp	10	15	10	15	20
				600V	Hp	15	20	15	20	25
Permissible wire range	Flexible wire				mm^2	1.5-10	1.5-10	1.5-10	1.5-10	10-35
					AWG	16-8	16-8	16-8	16-8	10-2
	Rigid wire				mm^2	1.5-16	1.5-16	1.5-16	1.5-16	10-35
					AWG	16-8	16-8	16-8	16-8	10-2

(*) 2+2 poles in series

IMQ approved UL approved

INTERLOCKED SWITCH SOCKET OUTLETS

VERSIONS

Version with safety transformer
compact (module 106)
SELV transformer 230/24V

Version with safety transformer
large (module 136)
SELV transformer 230/24V

Version with RAIL DIN
6 modules compact
(module 106)

REFERENCE STANDARDS

EN 60309-1
Plugs, socket outlets and couples for industrial purposes.
Part 1: general requirements.

EN 60309-2
Plugs, socket outlets and couples for industrial purposes.
Part 2: dimensional interchangeability requirements for pin and contact-tube accessories of harmonised configurations.

QUALITY MARKS

TECHNICAL CHARACTERISTICS

Rated current:	**16A-32A**
Rated voltage:	**20÷50V~**
Frequency:	**c.c. - 50÷60Hz**
SELV trasformer 220/24V:	**150VA**
Insulating voltage:	**500/690V~**
Protection degree:	**IP44-IP66/IP67**
Operating ambient temperature according to the reference standard:	**-25°C +40°C**
Max operating ambient temperature:	**60°C**
Glow Wire test:	**650°C/850°C**
Material:	**Engineering plastic**
IK degree at 20°C:	**IK07 (Advance2)** **IK08 (Advance2-HD)**
Cable inlets:	**Metric**
Fuse-carriers:	**gG 10,3x38mm**
Colour:	**Standard socket** Grey RAL 7035 front side and smoke-grey plate **Heavy duty socket** Blue RAL 5015 front side and dark Grey RAL 7004 body
Insulation class:	**Class III**

BEHAVIOUR WITH CHEMICAL AND ATMOSPHERIC AGENTS - STANDARD SOCKET

Saline solution	Acids		Bases		Solvents				Mineral oil	UV rays
	Concentrated	Diluted	Concentrated	Diluted	Hexane	Benzol	Acetone	Alcohol		
Resistant	Limited Resistance	Resistant	Limited Resistance	Resistant	Not Resistant	Not Resistant	Not Resistant	Limited Resistance	Limited Resistance	Resistant

BEHAVIOUR WITH CHEMICAL AND ATMOSPHERIC AGENTS - HD SOCKET

Saline solution	Acids		Bases		Solvents				Mineral oil	UV rays
	Concentrated	Diluted	Concentrated	Diluted	Hexane	Benzol	Acetone	Alcohol		
Resistant	Limited Resistance	Resistant	Limited Resistance	Resistant	Resistant	Limited Resistance	Not Resistant	Resistant	Resistant	Resistant

WIRING AND INSTALLATION

Wiring capacity of the terminals
Cross-section of the connectable conductors (mm²)

Rated current (A)	Socket outlets	
	Min	Max
16A	4	4
32A	4	10

PROTECTIONS FOR THE VERSION WITH TRANSFORMER

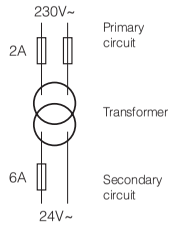

Fuses included

APPLICATION EXAMPLES

MODULAR SYSTEM

VERSIONS

Modular bases
- Standard
- Heavy duty

One module enclosure with cut-out
- Standard

Enclosure with plain lid
- Standard
- Heavy duty

Consumer unit
- Standard
- Heavy duty

REFERENCE STANDARDS

EN 60670-1
Boxes and enclosures for electrical accessories for household and similar fixed electrical installations.
Part 1: general requirements.

CEI 23-49
Enclosure for accessories for household and similar fixed electrical installations.
Part 2: particular requirements for enclosures for protection devices and accessories dissipating a considerable power in normal use.

QUALITY MARKS

TECHNICAL CHARACTERISTICS

Protection degree:	**IP66**
Operating ambient temperature according to the reference standard:	**-25°C +35°C**
Max operating ambient temperature:	**60°C**
Dissipable power according to the reference standard:	**8-17W**
Glow wire test:	**650°C/850°C**
Cable inlets:	**Metric**
Material:	**Engineering plastic**
IK degree at 20°C:	**IK07 (Advance2)** **IK08 (Advance2-HD)**
Colour:	**Grey RAL 7035 (standard)** **Grey RAL 7004 (Heavy duty)**
Insulation class:	**Class II (double insulation)** ⧈

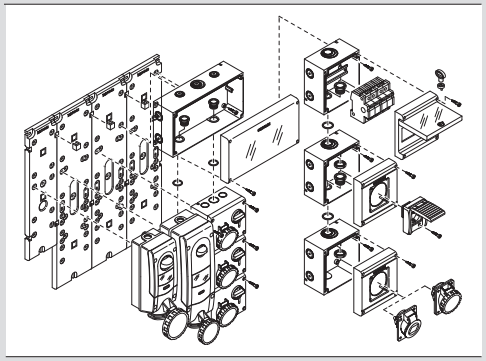

BEHAVIOUR WITH CHEMICAL AND ATMOSPHERIC AGENTS - STANDARD SYSTEM

Saline solution	Acids		Bases		Solvents				Mineral oil	UV rays
	Concentrated	Diluted	Concentrated	Diluted	Hexane	Benzol	Acetone	Alcohol		
Resistant	Limited Resistance	Resistant	Limited Resistance	Resistant	Not Resistant	Not Resistant	Not Resistant	Limited Resistance	Limited Resistance	Resistant

BEHAVIOUR WITH CHEMICAL AND ATMOSPHERIC AGENTS - HD SYSTEM

Saline solution	Acids		Bases		Solvents				Mineral oil	UV rays
	Concentrated	Diluted	Concentrated	Diluted	Hexane	Benzol	Acetone	Alcohol		
Resistant	Limited Resistance	Resistant	Limited Resistance	Resistant	Resistant	Limited Resistance	Not Resistant	Resistant	Resistant	Resistant

APPLICATION EXAMPLES

SWITCHED INTERLOCKED SOCKET OUTLETS 16-32-63A

VERSIONS WITH MECHANICAL INTERLOCK

	With switch-disconnector
	With switch-disconnector and fuse
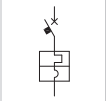	Molded case circuit breaker with thermal magnetic trip unit

REFERENCE STANDARDS

EN 60309-1
Plugs, socket outlets and couplers for industrial purposes.
Part 1: general requirements.

EN 60309-2
Plugs, socket outlets and couplers for industrial purposes.
Part 2: dimensional interchangeability requirements for pin and contact-tube accessories of harmonised configurations.

EN 60309-4
Plugs, socket-outlets and couplers for industrial purposes.
Part 4: switched socket-outlets and connectors with or without interlock.

TECHNICAL CHARACTERISTICS

Rated current:	**16A-32A-63A**
Rated voltage:	**100÷690V~**
Frequency:	**50÷60Hz**
Insulating voltage:	**500/690V~**
Protection degree:	**IP66/IP67/IP69**
Operating ambient temperature according to the reference standard:	**-25°C +40°C**
Minimum operating ambient temperature:	**-40°C**
Max. operating ambient temperature:	**+60°C**
Self-extinguishing GW test:	**960°C**
Self-extinguishing UL94:	**V0**
Material:	**Thermosettting**
IK degree at 20°C:	**IK10 (20J)**
Switch-disconnectors 16A-32A-63A:	**COMMAND Series**
Fuse: 16A-32A 63A	 **gG 10,3x38mm** **gG 22x58mm**
Colour:	**Grey RAL7037**
Insulation class:	**Class II (double insulation)** ⧈

BEHAVIOUR WITH CHEMICAL AND ATMOSPHERIC AGENTS

Saline solution	Acids		Bases		Solvents				Mineral oil	UV rays
	Concentrated	Diluted	Concentrated	Diluted	Hexane	Benzol	Acetone	Alcohol		
Resistant	Limited Resistance	Resistant	Limited Resistance	Resistant	Resistant	Resistant	Resistant	Resistant	Resistant	Resistant

CABLE ENTRY

Maximum entry with cable glands

Rated current (A)	Single socket		Socket with switchboard		
	Upper	Lower	Upper	Lower	Side
16A / 32A	M32	M32	M32	M32	M32
63A	M40	M40	M40	M40	M32

WIRING OPERATIONS

Wiring capacity of the terminals (mm²)

Rated current (A)	Socket outlets	
	Min	Max
16A	1,5	4
32A	2,5	10
63A	6	25

PADLOCK TO BE USED

Choice of padlock for socket knob, fuse door and switchboard door

Rated current (A)	Padlock arc diameter (mm)
16A-32A	5
63A	6,3

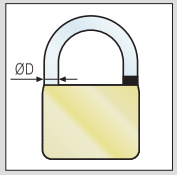

SPECIAL CHARACTERISTICS

ADVANCE-GRP CHARACTERISTICS

The **ADVANCE-GRP** product line includes a series of 16A, 32A, 63A, 125A interlocked sockets (compliant with EN60309-4 standards) and the casings to contain them. It's the most complete range of interlocked sockets produced in GRP (*Glass Reinforced Polyester*) thermosetting material.

A unique feature which enhances the exceptional mechanical strength of **ADVANCE-GRP** products is the **SMC** (*Sheet Moulding Compound*) production process used for the casings.
SMC is a technology which uses exclusively non-woven sheets, pre-impregnated with polyester resin. This method consists in preparing the sheet material inside a mould which, equipped with a negative mould, presses the composite so as to allow compaction.

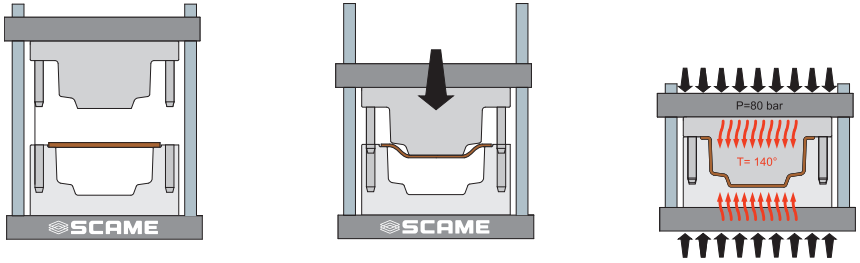

SMC is an advanced technology which enhances the quality of the raw material without reducing the high-strength characteristics during transformation; it's a high-performing technology in terms of the mechanical performance of the resultant product (glass fibre length, homogeneity of the material, integrity of the fibres).
On the contrary, the **BMC** (*Bulk Moulding Compound*) technology is a technology for moulding composite materials which uses a raw material available in "blocks" (short, charged fibres) which are subjected to high thermomechanical stress during the transformation process, consequently diminishing the mechanical properties of the details, thereby reducing the impact strength and flexural strength.

The glass-fibre reinforced polyester used in **ADVANCE-GRP** guarantees excellent mechanical strength and a long lifetime: this material is highly resistant to contamination, completely corrosion resistant and suited for applications requiring the use of components with low smoke emission and no halogens, **LSOH** (*Low Smoke Zero Halogen*) components. The outstanding properties of the material are also guaranteed over time, thanks to the high **RTI** value (*Relative Temperature Index*), measured to be 20,000h. Numerous verifications and tests have been carried out, even UV resistance tests, in order to guarantee the long duration of the material's initial performance.
The thickness of the walls is sufficient to offer an excellent alternative to aluminium, stainless steel or cast iron.

OUTSTANDING HEAT AND FIRE RESISTANCE

The glass-fibre reinforced polyester used in **ADVANCE-GRP** guarantees excellent heat and fire resistance: it does not propagate flames, emit halogens or smoke.
This material has outstanding flame retardancy: Glow Wire 960°C according to EN 60695-2-1; V0 according to UL94. It's suited for applications requiring the use of components with low smoke emission and no halogens, LSOH (*Low Smoke Zero Halogen*).

OUTSTANDING IMPACT RESISTANCE

The glass-fibre reinforced polyester used in **ADVANCE GRP** and the high thickness of the casing walls guarantee an excellent mechanical resistance to impacts.
The **SMC** technology used to produce the casings makes **ADVANCE-GRP** an indestructible product.
The impact resistance of the casings is higher than 20J (IK10) according to EN50102, even under limit temperature conditions (-40°C +60°C).

RESISTANCE TO CHEMICAL AGENTS

The **ADVANCE-GRP** interlocked sockets and casings, thanks to the glass-fibre reinforced polyester with which they are produced, have excellent resistance to aggressive chemical substances, saline solutions, diluted acids, hydrocarbons, mineral oils, alcoholic substances. They are ideal for use in highly corrosive atmospheres.

RESISTANCE TO ATMOSPHERIC AGENTS

The structure and materials used also make **ADVANCE-GRP** a product suited for the most extreme environmental conditions.
The double degree of protection IP66 and IP67 (IP66 for 125A), guarantees an excellent seal against the entry of solid objects or liquids into the casings.
Outstanding resistance to UV radiation, exceptional reliability under environmental stress and use at both low and high ambient temperatures (-40°C +60°C).

APPLICATION EXAMPLES

TECHNICAL DATA SWITCH DISCONNECTORS

					without fuse			with and without fuse
					16A	32A	63A	125A
Rated insulation voltage **Ui**				Vac	690	690	690	750
				Vdc	400	400	-	750
Rated impulse withstand voltage **Uimp**				kV	4	4	8	12
Thermal current **Ith**				A	30	40	63	200
Thermal current **Ithe**				A	30	40	63	-
Nominal current rating Ie	**AC21A**	Resistite loads, inluding moderate overloads		415V A	16	32	63	200
				500V A	16	32	63	-
				690V A	16	32	63	160
	AC22A	Mixed resistite and inductive loads, including moderate overloads		415V A	16	32	63	200
				500V A	16	32	63	-
				690V A	16	32	63	160
	AC23A	Switching off motor loads or other highly inductive loads (3 phase/3 pole)		415V A	16	32	63	135
				500V A	16	32	40	125
				690V A	16	25	30	80
	AC3	Squirrel-cage motor: starting, switching off motor during running (3 phase/ 3 pole)		400V A	-	28,5	40	-
				690V A	12	20	25	-
	DC21A	Resistite loads, including Moderate overloads		300V A	20(*)	32(*)	-	160(*)
	DC22A	Mixed resistite and inductive loads, including moderate overloads		250V A	25(*)	32(*)	-	160(*)
				600V A	10(*)	10(*)	-	-
Rated short-time withstand current **Icw** (s)				A	400	400	1500	4000
Short-circuit protection	Conditional short-circuit current			kAeff	10	10	10	24
	Associate fuse size for conditional short-circuit current - Type gG			A	16	32	63	
	Rated short-circuit making capacity **Icm**			A	1500	1500	2850	24000
Rated current UL without fuse	General applications - Single-phase and Three-phase			600V A	32	40	63	125
	AC motor, all-pole interruption - Single-phase			120V Hp	1,5	2	3	7,5
				240V Hp	3	5	7,5	20
	AC motor, B, C, D, all-pole interruption - Three-phase			240V Hp	7,5	10	10	40
				480V Hp	10	15	20	75
				600V Hp	15	20	25	100
Permissible wire range	Flexible wire			mm^2	1,5-10	1,5-10	10-35	10-70
				AWG	16-8	16-8	10-2	8-1/10
	Rigid wire			mm^2	1,5-16	1,5-16	10-35	10-70
				AWG	16-8	16-8	10-2	8-1/10

(*) 2+2 poles in series

TECHNICAL CHARACTERISTICS 16A-32A-63A VERSIONS

WITH FUSES

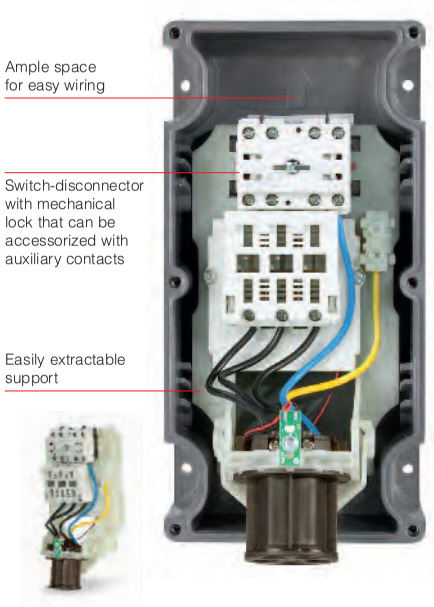

WITH MCB

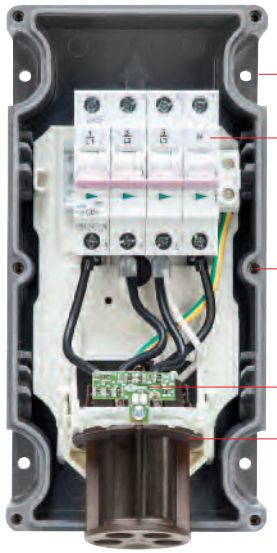

BOTTOM VIEW

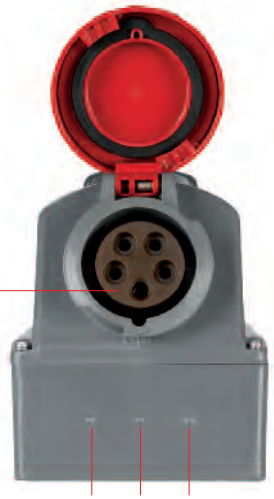

TOP VIEW

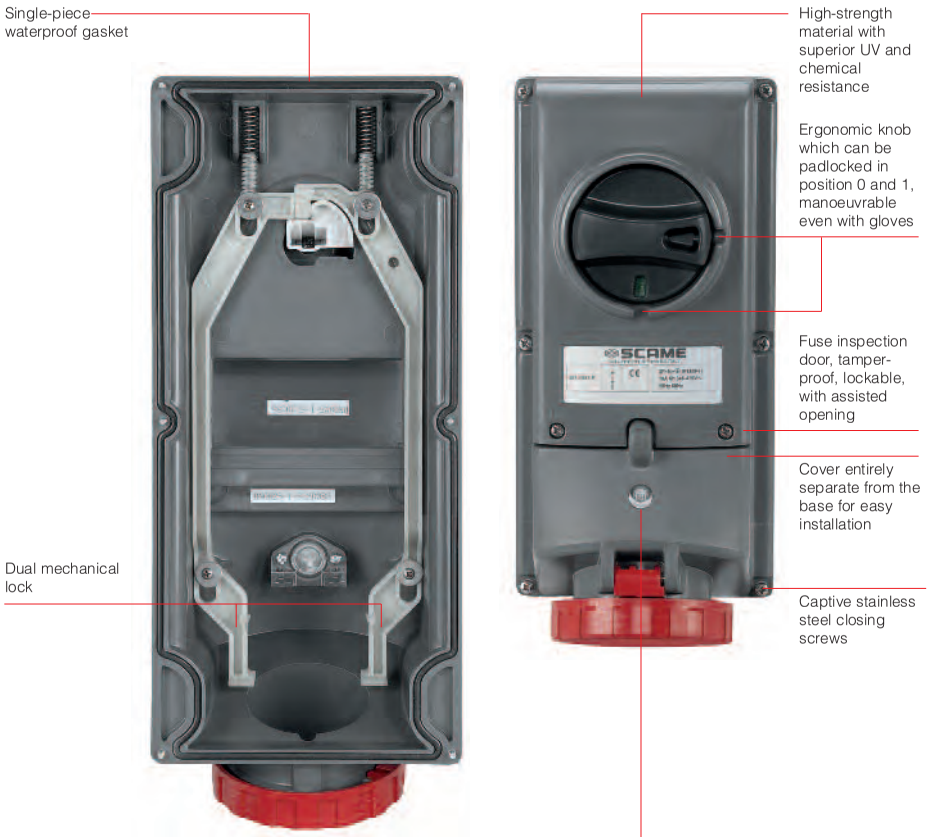

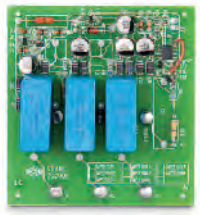

I-Device

An electronic device controls (*Intelligence Device*) the status of the interlocked socket, monitoring the electrical functionality:
- operation of the signalling and control card is guaranteed even when the load is not connected;

INDICATOR LIGHT ON
- indicates that the fuses are not open and all the phases are present;
- indicates that the socket outlet is powered correctly;

INDICATOR LIGHT FLASHING
- signals the interruption of one or more fuses;
- signals the absence of a phase*;

INDICATOR LIGHT OFF
- indicates that the socket outlet is not powered.

** for single-phase products in the event of phase/neutral loss led signaling appears off.*

ADVANCE-GRP Series <50V

SWITCHED INTERLOCKED SOCKET OUTLETS

REFERENCE STANDARDS

EN 60309-1
Plugs, socket outlets and couplers for industrial purposes.
Part 1: general requirements.

EN 60309-2
Plugs, socket outlets and couplers for industrial purposes.
Part 2: dimensional interchangeability requirements for pin and contact-tube accessories of harmonised configurations.

BEHAVIOUR WITH CHEMICAL AND ATMOSPHERIC AGENTS

Saline solution	Acids		Bases		Solvents				Mineral oil	UV rays
	Concentrated	Diluted	Concentrated	Diluted	Hexane	Benzol	Acetone	Alcohol		
Resistant	Limited Resistance	Resistant	Limited Resistance	Resistant	Resistant	Resistant	Resistant	Resistant	Resistant	Resistant

VERSIONS

Version with transformer.
SELV transformer 230/24V~ 150VA

Version without transformer.

TECHNICAL CHARACTERISTICS

Rated current:	**16A-32A**
Rated voltage:	**20÷50V~**
Frequency:	**50÷60Hz**
SELV transformer 220/24V:	**150VA**
Insulating voltage:	**500/690V~**
Protection degree:	**IP66/IP67/IP69**
Operating ambient temperature according to the reference standard:	**-25°C +40°C**
Minimum operating ambient temperature:	**-40°C**
Max. operating ambient temperature:	**+60°C**
Self-extinguishing GW test:	**850°C (socket housing)** **960°C (enclosure)**
Material:	**Thermosetting**
IK degree at 20°C:	**IK10**
Colour:	**Grey RAL7037**
Insulation class:	**Class III**

APPLICATION EXAMPLES

SWITCHED INTERLOCKED SOCKET OUTLETS 125A

VERSIONS WITH MECHANICAL INTERLOCK

	With switch-disconnector
	With switch-disconnector and fuse
	With fuse and switch-disconnector
	With molded case circuit breaker with thermal magnetic trip unit
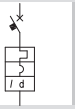	With molded case circuit breaker with thermal magnetic and residual current release trip units
	With contactor

REFERENCE STANDARDS

EN 60309-1
Plugs, socket outlets and couplers for industrial purposes.
Part 1: general requirements.

EN 60309-2
Plugs, socket outlets and couplers for industrial purposes.
Part 2: dimensional interchangeability requirements for pin and contact-tube accessories of harmonised configurations.

EN 60309-4
Plugs, socket-outlets and couplers for industrial purposes.
Part 4: Switched socket-outlets and connectors with or without interlock.

TECHNICAL CHARACTERISTICS

Rated current:	**125A**
Rated voltage:	**100÷690V~**
Frequency:	**50÷60Hz**
Insulating voltage:	**500/690V~**
Switched socket outlets with interlock degree of Protection:	**IP66**
Minimum operating ambient temperature:	**-40°C**
Maximum operating ambient temperature	**+60°C**
Self-extinguishing GW test:	**960°C**
Self-extinguishing UL94:	**V0**
Switched socket outlets with interlock material:	**Thermosetting**
Impact Resistance:	**IK10 (20J)**
Switch-disconnectors: 125A	**Switch ABB OT 160**
MCCB:	**ABB T-MAX**
Fuse: 16A-32A 63A 125A	**gG 10,3x38mm gG 22x58mm NH00**
Sockets colour:	**Grey RAL7037**
Insulation class:	**Class II (double insulation)** ⧈

BEHAVIOUR WITH CHEMICAL AND ATMOSPHERIC AGENTS

Saline solution	Acids		Bases		Solvents				Mineral oil	UV rays
	Concentrated	Diluted	Concentrated	Diluted	Hexane	Benzol	Acetone	Alcohol		
Resistant	Limited Resistance	Resistant	Limited Resistance	Resistant	Resistant	Resistant	Resistant	Resistant	Resistant	Resistant

CABLE ENTRY

Maximum entry with cable glands

Rated current (A)	Single socket	
	Upper	Lower
125A	M63	M63

WIRING OPERATIONS

Wiring capacity of the terminals (mm^2)

Rated current (A)	Socket outlets		Plugs	
	Min	Max	Min	Max
125A	50	95 (*)	25	50

(*) In case of flexible cable max 70 mm^2.

PADLOCK TO BE USED

Choice of padlock for socket knob, fuse door and switchboard door

Rated current (A)	Padlock arc diameter (mm)
125A	6,3

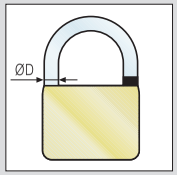

TECHNICAL CHARACTERISTICS VERSION 125A

WITH FUSES

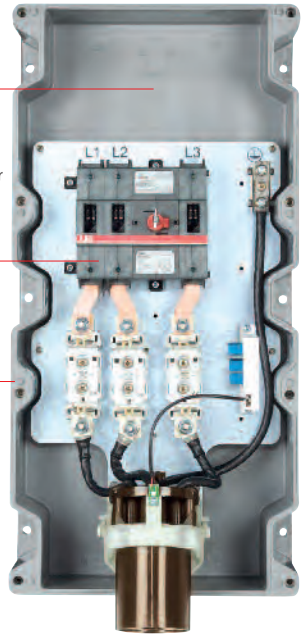

Ample space for easy wiring

Switch-disconnector with mechanical lock that can be accessorized with auxiliary contacts

Punched marks for easy closure of the cover

WITH MCCB + RCD

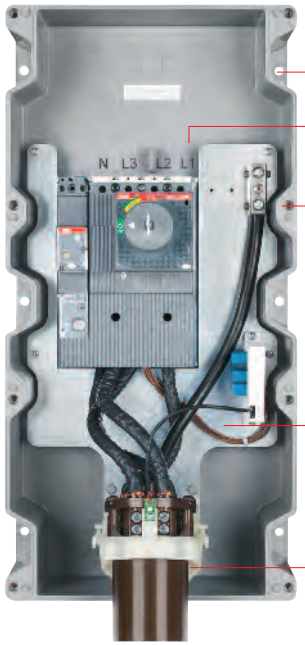

Outdoor wall fastening

Under-plate cable runway

Threaded metal inserts

Easily extractable bottom plate

Possibility to assemble microswitch

BOTTOM VIEW

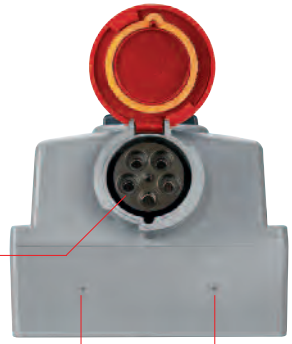

Module in high-temperature resistant engineering polymer

Possible entry from bottom side (input-output also)

TOP VIEW

Self-centering punch marks to facilitate drilling

Single-piece waterproof gasket

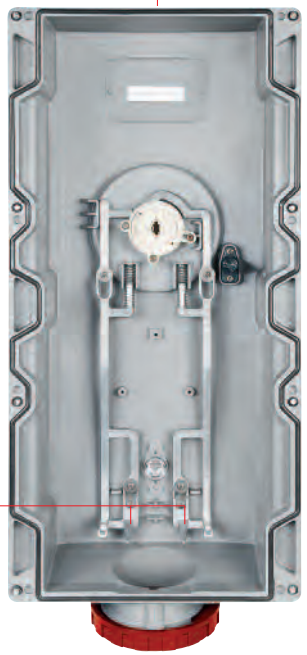

Dual mechanical lock

Rating on metal plate

Captive stainless steel closing screws

Ergonomic knob which can be padlocked in position 0 and 1, manoeuvrable even with gloves

High-strength material with superior UV and chemical resistance

Residual current release trip units test push button

Cover entirely separate from the base for easy installation

Thermal magnetic protection:	**Molded case circuit breaker ABB Tmax T1B (16kA) with thermal magnetic trip unit TMD (adjustable thermal threshold 0,7…1 x In fixed magnetic threshold 10 x In)**
Thermal-magnetic and residual current protection:	**Molded case circuit breaker ABB Tmax T1B (16kA) with thermal magnetic trip unit TMD (adjustable thermal threshold 0,7…1 x In fixed magnetic threshold 10 x In) + residual current release trip units RC221/1 (adjustable residual current trip 0,03 - 0,1 - 3A and time limit for non-trip instantaneous)**
Version with contactor:	**Contactor CL09 GE POWER CONTROL**

I-Device

An electronic device controls (*Intelligence Device*) the status of the interlocked socket, monitoring the electrical functionality:
- operation of the signalling and control card is guaranteed even when the load is not connected;

INDICATOR LIGHT ON
- indicates that the fuses are not open and all the phases are present;
- indicates that the socket outlet is powered correctly;

INDICATOR LIGHT FLASHING
- signals the interruption of one or more fuses;
- signals the absence of a phase*;

INDICATOR LIGHT OFF
- indicates that the socket outlet is not powered.

** for single-phase products in the event of phase/neutral loss led signaling appears off.*

AMR SYSTEM

SCAME, always focused on innovation and techno-logical research, has developed a smart system called **AMR SYSTEM** (Automated Meter Reading), to apply to its products. The SCAME products equipped with this smart system are the ADV GRP interlocked sockets and the DOMINO switch panels with two and four sockets.
A smart system features technology through which it is able to control and manage, on its own and in remote, industrial electrical systems aimed at improving the user's service.
In addition to being an effective solution for preventing failures and quickly resolving them, remote management systems are also a valid instrument for cost containment and for system monitoring and control.
This system is equipped with an extremely versatile and accurate energy analyser with microprocessor, designed to meet the needs of the most advanced applications for the monitoring of electrical parameters and for the management of energy consumption, allowing real-time reading via the Internet of all acquisition data and threshold management in automatic mode; moreover, it is possible to send, by e-mail, local alarms pertaining to anomalies or control of the status of manoeuvring switch and inserted plug.
The system is preset for load management. Preventing overload risks is important in order to avoid the tripping of circuit breakers and consequently the resulting malfunction (partial or total power failure), and to significantly reducing energy costs.
In fact, as everyone knows, exceeding certain limits and parameters pertaining to the supply of electricity agreed upon with the grid operator results in the application of penalties or higher rates.
Therefore, it will be possible to automatically disable or reinstate devices or loads connected to the ADV GRP AMR socket.
The various functions include the sending of commands. Commands can be sent to a single socket or to a group of sockets, in both local or remote mode. In the latter case, an Internet connection is required.
Lastly, it allows the Energy Manager to be informed in real time on the condition of the system through any device capable of displaying a web page.
Therefore, the product can be used to diagnose, command, control and manage remote units towards a central server through specific communication protocols. The system consists of one or more sockets and management software.
In order for the two parts to communicate one with the other, a basic communication infrastructure needs to be set up. The communication channels can be RS485, Canbus and wireless. The main carrier is the Wi-Fi.
In case the Wi-Fi connection is not working, the **AMR SYSTEM** can store processing reports in a circular buffer for over a month. Once communication is restored, it sends the stored data to the management software.
The system fitted to the GRP and DOMINO sockets is suited for applications on all kinds of electric grids, 3 and 4-wire three-phase, single-phase, low and medium voltage.
All operating parameters can be set through the software, including the input and output, the alarms, the Canbus/RS485 port.
The digital input is typically used as a status indicator for inserted plug and as an ON/OFF manoeuvre selector, as well as for earth presence signalling purposes.

DATA ACQUISITION AND MONITORING FROM A SINGLE POINT

The AMR system allows the management and monitoring of loads from a single "socket" point, ensuring the highest functionality, reliability and operating potential, in addition to simplifying installation.
In this case, the interlocked socket carries out a "multi-service", supplying electricity for proper operation to the connected load, at the same time performing monitoring and management functions.
This is a huge advantage in terms of installation costs and times.

- All energy-related data can be detected using a single card
- The card is located inside the socket
- No wiring required. Significant savings as far as time and materials are concerned.
- Accuracy class: 1% current/voltage, 1.5% power/energy
- Local and remote control with alarm and/or signalling of manoeuvre status and inserted plug
- Control with the signalling of anomalies and system status on the socket through a warning light
- Warning light on the socket for no earth
- Through the socket, the SCAME system can monitor refrigerated containers; however it is not designed for controlling the temperature inside the containers
- The SCAME system does not carry out checks other than electricity-related ones.

The products fitted with the AMR system (from the acronym **AMR "automated meter reading"**) feature advanced technology.
Through the AMR system, you can analyse the power grid for current and power consumption, as well as read all acquisition data in real time via the Internet;

PRODUCT RANGE – AMR SYSTEM

ADVANCE-GRP Series

DOMINO Series

OMNIA Series

Available functions

- Socket monitoring
- Monitoring of consumption
- Fuse check
- Internal temperature
- Plug presence
- Earth presence
- Energy management
- Data collection
- Graphs
- Alarms
- Reports
- Remote control
- Load management
- Notifications by e-mail
- Text messages (optional)

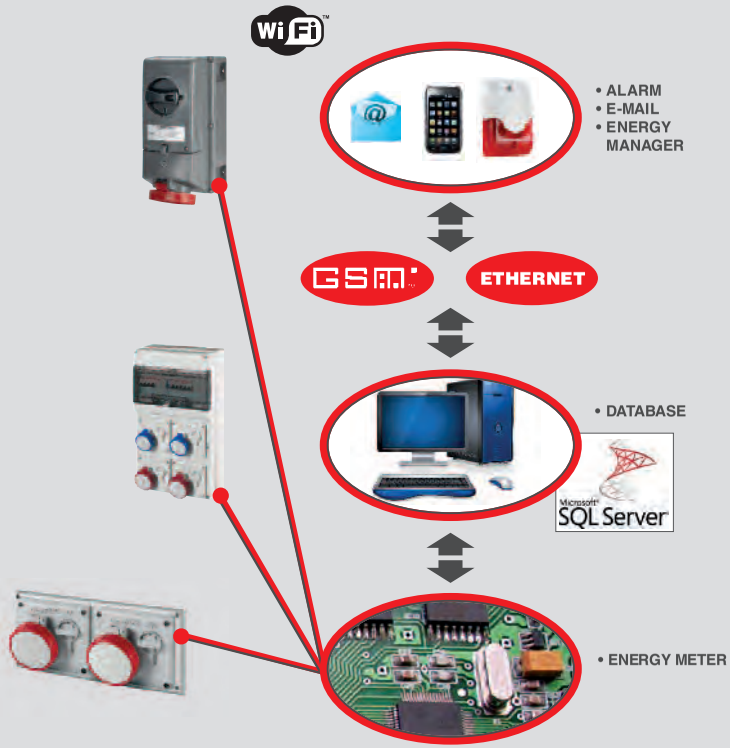

MANAGEMENT SOFTWARE

The system is also preset for communicating in local mode with other AMR devices through RS485 or Canbus channels (optional), while it communicates with the data collection server through a Wi-Fi connection.
The computer assigned the task of monitoring the devices, process their status and retaining it for a defined time period, issues notices in case of anomalous operating conditions. Through the sampling of energy data, the system is also able to process information on the energy and consumption profile as well as represent data in graph form.
The software can be structured according to the customer's needs. The system can carry out quality measurements, make decisions on its own and inform the Energy Manager in real time with regards to the system status.
It is also possible to **monitor** energy parameters so as to avoid penalties applied for a low COS-FI (power factor). **Eliminate waste** by checking motors, lighting, heating, air-conditioning, compressors, refrigerators, transformers, distribution lines and other utilities.

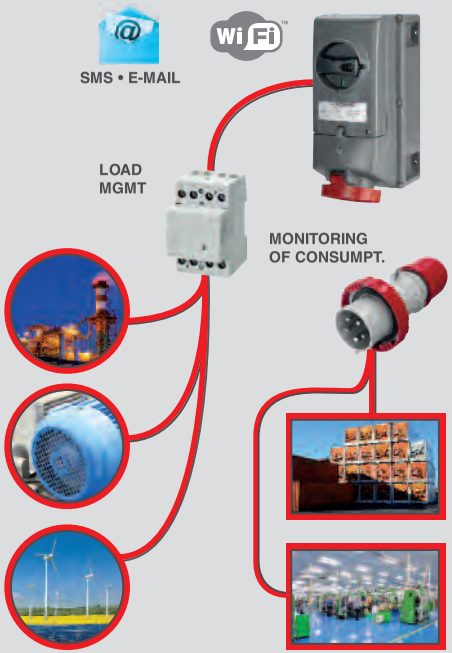

A few good reasons for choosing the AMR system

- **Small investment** that yields significant benefits at a reasonable cost.
- **Simple to install** and to manage, at the same time ensuring reliable performance.
- **User interface that is simple to use**, also suited for users with no prior experience.
- **Networked installation**, in order to share information and improve communication.
- **Flexible**, quick start-up and installation, with no additional installations required.
- **Improved service** to the system, thus reducing the number of failures and downtime.
- **More integrated functions** in a single instrument that can be used to both manage maintenance jobs and to control the systems quickly and directly.
- **It provides useful information**, constantly populating a database in order to subsequently carry out statistical analyses.
- **It handles emergencies** quickly and effectively, sending anomaly notices to the Energy Manager.
- **It cuts operator involvement down to a minimum.**
- **It oversees the processes,** with constant control of the systems being managed.

FIELDS OF APPLICATION

There are various application fields, from terminal containers to the shipyard sector to heavy industry. These are just some of the examples of possible applications.

Below are a few tables that list some application examples and the requested product type.

TERMINAL CONTAINER

Application	Decision maker	Product type	Problems	Suggested solution	Benefits
Reefer towers	Maintenance Manager	interlocked sockets 32A 3P+E 3H	Frequent failures and tripping of protections with possible/probable loss or deterioration of the reefer load	AMR system I/O	Real-time monitoring of failures and tripping of protections with alarm systems to the maintenance managers in order to implement the necessary operations
Energy management	Energy Manager	interlocked sockets 32A 3P+E 3H energy meter on transformer cabin	Uncontrolled consumption, with major waste due to the use of old reefers with high consumption	AMR system EM	Knowledge of exact consumption at the single socket level. Possibility to check anomalous consumption and modulate the service fees in addition to the incidence of consumption due to improper use
Container handling	Maintenance Manager	interlocked sockets 32A 3P+E 3H	Handling of the container with the plug inserted and consequent breaking of sockets and structures	AMR system I/O with relay output	Possibility to combine relay outputs and aux. contacts to acoustic or visual devices to provide consent to the handling

EXAMPLE OF CONTAINER TERMINAL APPLICATIONS

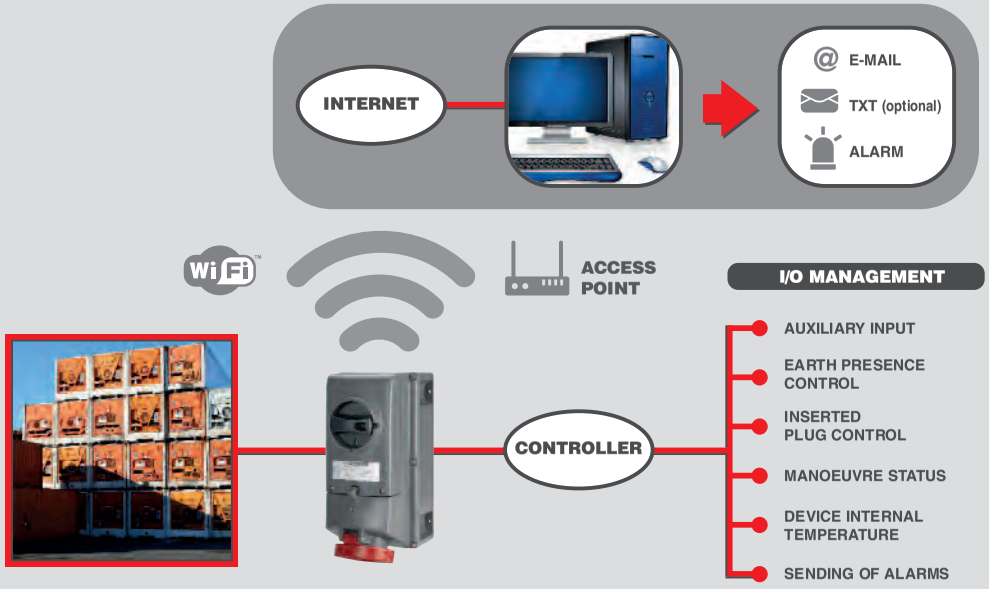

ADVANCE-GRP[AMR] System

SHIPYARD

Application	Decision maker	Product type	Problems	Suggested solution	Benefits
Worksite driving force units	Maintenance Manager	Groups of interlocked sockets	Long maintenance jobs and downtimes	I/O AMR system	Targeted management and scheduling of maintenance jobs, with consequent reduction of maintenance times and costs
External companies' equipment	Energy Manager	Groups of interlocked sockets	Waste due to improper use and management of the power supply	EM AMR system with relay outputs	Possibility for exact control of the consumptions of the individual sockets matched to the container or to external companies' equipment and possibility to manage and turn off unnecessary power supplies
Suction and lighting system in a water basin	Systems Manager	Power supply sockets or plugs to the equipment	Both suction and temporary lighting systems stay turned on even when no one is operating on board	I/O AMR system with relay output	The Manager is guaranteed that this type of equipment with high consumption work only when truly necessary, so as to be able to manage their proper operation in remote as well.

INDUSTRY

Application	Decision maker	Product type	Problems	Suggested solution	Benefits
Worksite driving force units	Maintenance Manager	Groups of interlocked sockets	Long maintenance jobs and downtimes	AMR system I/O	Targeted management and scheduling of maintenance jobs, with consequent reduction of maintenance times and costs
Large machinery and production plants	Energy Manager	Interlocked sockets	Uncontrolled machinery consumption and failure to check for proper operation of the loads (machinery) connected to the interlocked sockets	AMR system EM	Possibility for exact control over energy consumption and Efficiency, as well as checking the consumption log
Process management	Methods Manager	Interlocked sockets	Poor machinery utilisation management and poor work distribution	AMR system EM	The Methods Manager can check the absorption/utilisation of the machinery in order to make the production processes more efficient

SHIPYARD APPLICATION

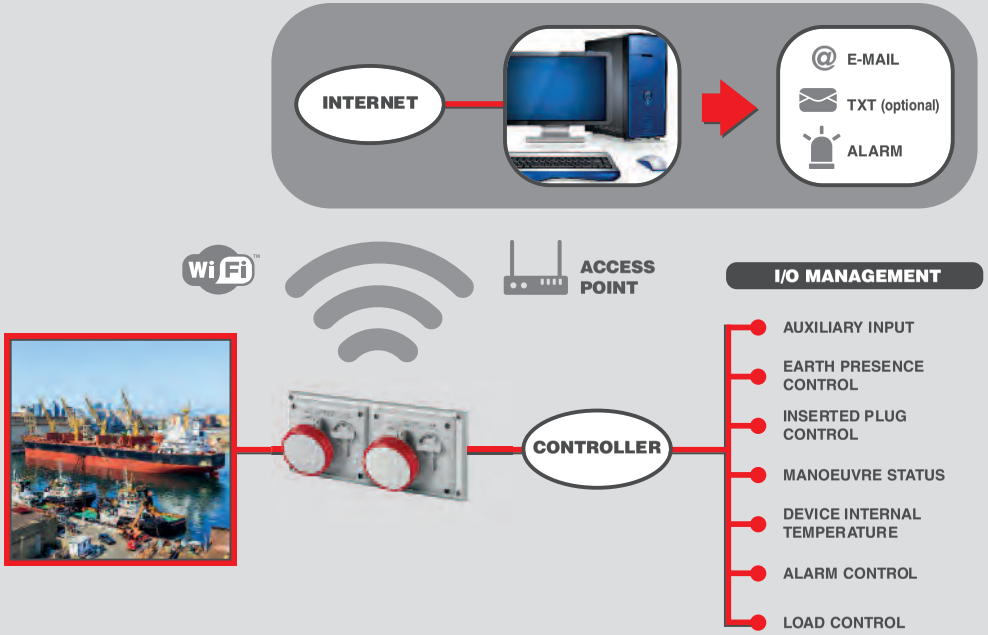

INDUSTRY APPLICATION

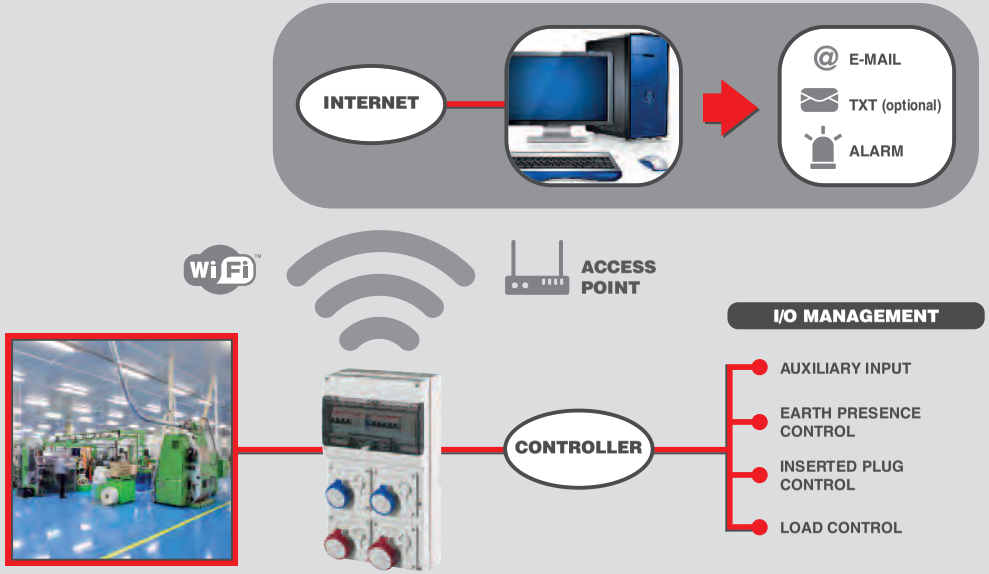

LOAD MANAGEMENT AND REMOTE CONTROLS

The system is pre-set for load management.
Preventing overload risks is important in order to avoid the tripping of circuit breakers and consequently the resulting malfunction (partial or total power failure), and to significantly reduce energy costs.
In fact, as everyone knows, exceeding certain limits and parameters pertaining to the supply of electricity agreed upon with the grid operator results in the application of penalties or higher rates.
Therefore, it will be possible to automatically disable or reinstate devices or loads connected to the ADV GRP AMR socket. The various functions include the sending of commands. Commands can be sent to a single socket or to a group of sockets, in local or remote mode.
In the latter case, an Internet connection is required.

CALENDAR FUNCTION

Through the calendar function, the user can program certain rules to activate/deactivate at an established date and time.

For example, deactivating the load connected to the socket, setting the day and time.

EXAMPLE

The example below shows an application in which the load applied to the socket is a motor. In case the AMR control and monitoring system detects a malfunction of the motor or the socket itself, it pilots an external relay/contactor, through a contact output (NO/NC), that starts a failure signalling siren or flashing light.

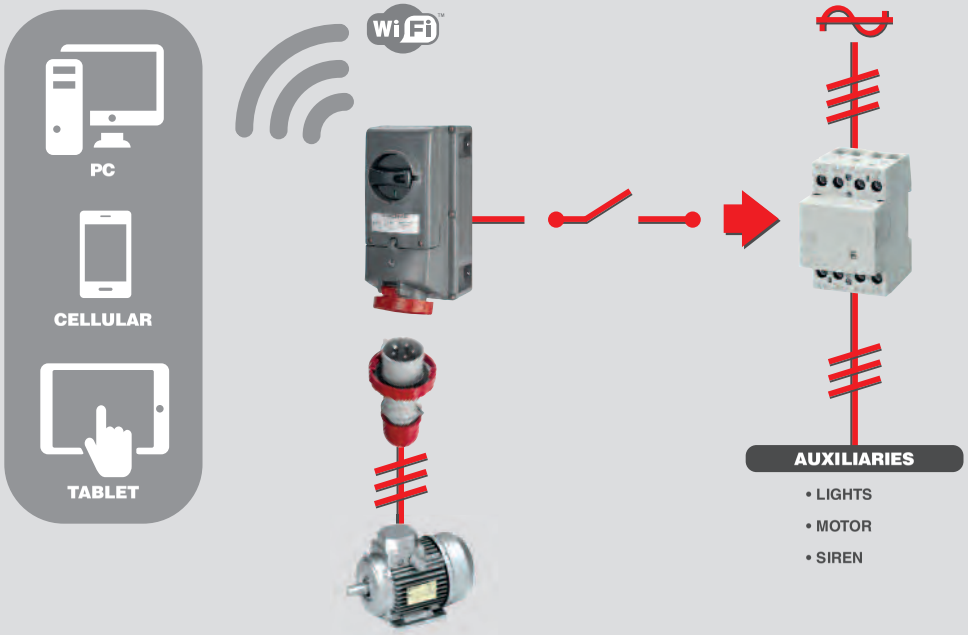

EXAMPLE: CONTROL OF LOAD CONNECTED TO THE SOCKET

With this installation, the motor can be piloted by the socket through the contact output (NO/NC) of the AMR system which, in turn, pilots an external relay to which the motor is connected.
This way, the motor can deactivated/activated depending on special events that have occurred, such as alarms, failures or simply to cut down on electricity consumption.
Moreover, this configuration allows the user to interact with the socket, activating/deactivating the motor in local or remote mode (through the web).

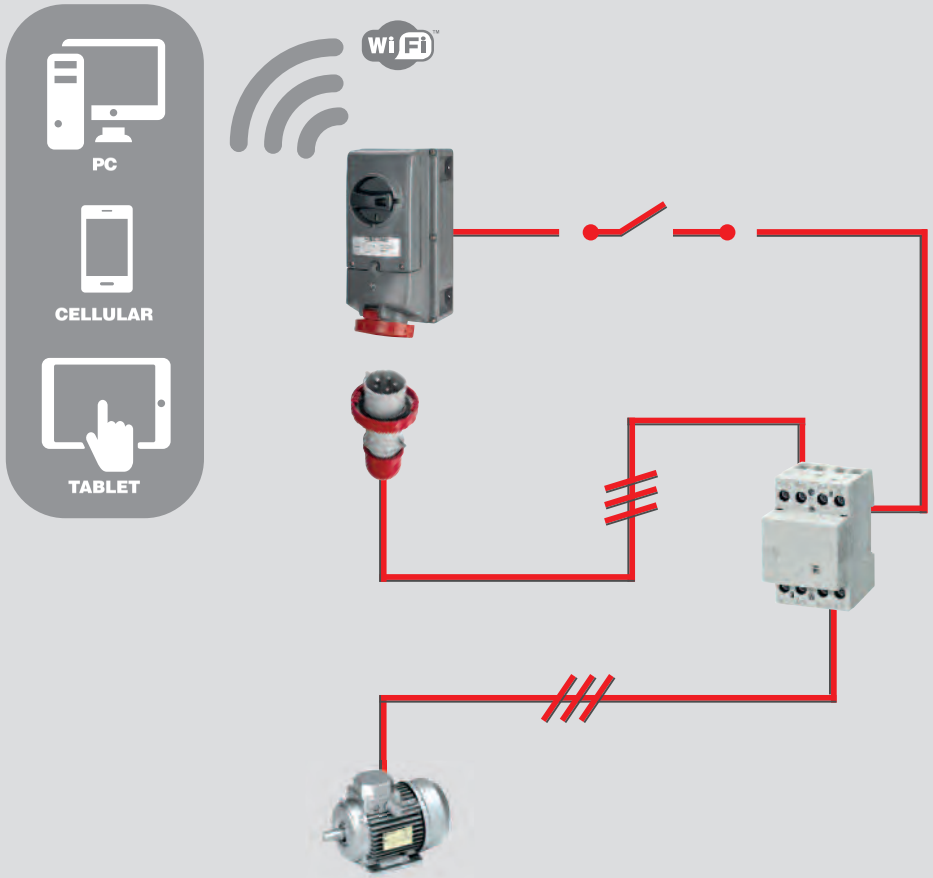

JUNCTION BOXES FOR ELECTRICAL INSTALLATIONS

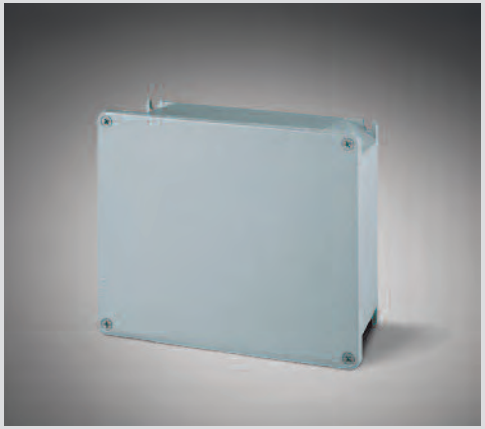

VERSIONS

Enclosure IP66

Mounting plates

DIN rail kit
(horizontal and diagonal fixing)

REFERENCE STANDARDS

EN 60670-22
Boxes and enclosures for electrical accessories for household and similar fixed electrical installations.
Part 22: particular requirements for connecting boxes and enclosures.

QUALITY MARKS

TECHNICAL CHARACTERISTICS

Protection degree:	**IP66/67**
Operating ambient temperature according to the reference standard:	**-25°C +60°C**
Max. operating ambient temperature (Short period):	**-40°C +90°C**
Material:	**Alluminium alloy**
IK degree at 20°C:	**IK08**
Cable inlets:	**Blank sides**
DIN rail fixing	**Yes**
Colour:	**Grey RAL 9006 with metallic pigments**

Heavy duty appliance for internal industrial applications.

BEHAVIOUR WITH CHEMICAL AND ATMOSPHERIC AGENTS

Saline solution	Acids		Bases		Solvents				Mineral oil	UV rays
	Concentrated	Diluted	Concentrated	Diluted	Hexane	Benzol	Acetone	Alcohol		
Resistant	Limited Resistance	Resistant	Limited Resistance	Resistant	Limited Resistance	Limited Resistance	Limited Resistance	Resistant	Resistant	Resistant

Enclosures and covers in aluminium alloy with blank walls and covered.

Holding seal in expanded EPDM, already mounted in place on the cover.

Fixing to wall by brackets incorporated in the enclosure base.

APPLICATION EXAMPLES

CABLE REELS WITH AUTOMATIC REWIND

REFERENCE STANDARDS

EN 61242
Electrical accessories.
Cable reels for household
and similar purposes.

VERSIONS

Cable reel without plug and connector - IP41

Cable reel with domestic plug and trailing socket for domestic application - IP40

Cable reel with plug and portable lamp - IP20

Cable reel with plug and portable lamp - IP40

TECHNICAL CHARACTERISTICS

Rated current:	**2,5A-4A-6A-10A**
Rated voltage:	**12÷24V~ - 230V~**
Frequency:	**50Hz**
Insulating voltage:	**250V~**
SELV transformer 220/24V:	**60W**
Protection degree:	**IP20-IP40-IP41**
Operating ambient temperature according to the reference standard:	**-25°C +40°C**
Max operating ambient temperature:	**60°C**
Glow wire test:	**650°C/850°C**
Material:	**Tecnopolimero**
IK degree at 20°C:	**IK08**
Max load wound:	**2300W**
Cable:	**H07RN-F (cable reel with plug and portable lamp) H05VV-F**

BEHAVIOUR WITH CHEMICAL AND ATMOSPHERIC AGENTS

Saline solution	Acids		Bases		Solvents				Mineral oil	UV rays
	Concentrated	Diluted	Concentrated	Diluted	Hexane	Benzol	Acetone	Alcohol		
Resistant	Not Resistant	Not Resistant	Limited Resistance	Resistant	Not Resistant	Not Resistant	Not Resistant	Limited Resistance	Resistant	Resistant

Portable lamp: handle made of non-hygroscopic insulating material, guard, conforms to EN 60598-2-8 and all live parts are completely insulated. There is a hooking eye on the AUTOROLLER for hanging up the lamp when it is not in use.

Wall mounting bracket: allows the Autoroller to be secured onto any vertical surface. There is housing for the safety transformer and two cable clamps are fitted onto the rear of the bracket. When correctly installed, the bracket allows the unit to swivel 310 ° in the direction of the cable pull.

APPLICATION EXAMPLES

STRUCTURAL CHARACTERISTICS

1 - Wall mounting bracket
Made of an engineering plastic, it is designed to hold the cable reel and allow it to swivel through 310°.
2 - Automatic rewind unit
A sturdy casing made of engineering plastic contains the automatic cable rewind device, which is made up of a high-strength spring.
Electrical continuity is maintained at all times by means of an integral slip-ring configuration (rated at 10 A). Two rollers located at the cable outlet ensure kink-free rewinding.
3 - Transformer (SELV)
An isolating transformer can be fitted on the wall bracket.
A luminous two-pole switch connected to the primary winding indicates ON/OFF status, while a fuse on the secondary winding protects the transformer against overcurrents.
4 - Cable
Cable lengths up to 16 m can be wound onto the drum.
Problem-free winding of both PVC and rubber cables is assured.
5 - Power supply
Power can be supplied either through the rewind unit or through the reeling cable. Factory-wired units supplied by Scame come equipped with a plug connected to the drum casing by a cable, and with a connector or a portable lamp connected to the reeling cable.

CABLING NOTES
The versions supplied without connector and plug may be cabled directly to the appliances: correct installation requires a cable clamp capable of withstanding the pull forces and a cable sleeve to protect the cable from abrasion.

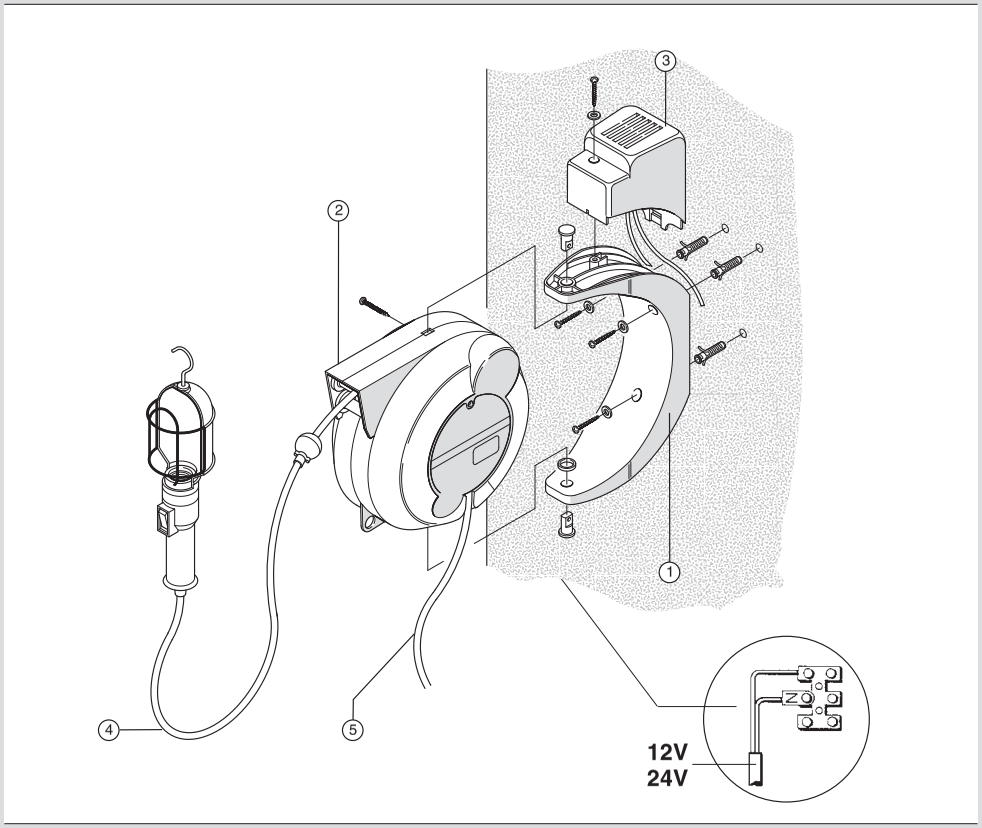

INSTRUCTIONS FOR USE

The cable coiler is equipped with a spring for cable winding. This mechanical device is constantly in operation; therefore make sure that both during winding and unwinding the cable is accompanied during its movement and NEVER left free.
If used on an automatic machine, appropriate guards shell be installed in order to prevent any damage to persons or things in the event of any cable or spring breakage.
The cable coiler is provided with cable blocking device at every turn of the coil.
When working with cable unwound and ratchet stop on, make sure that the cable is not accidentaly touched (the catch may be released and the cable may wind up uncontrolledly).

CABLE REEL WITH TRANSFORMER

The transformer has a power of 60 Watt, protected through circuit breakers against short circuits and overloads due to the use of bulbs with power above 60 Watt.
In case of overload, the circuit breaker breaks the circuit; before connecting it again wait a moment to allow the cooling of the circuit breaker and then press the button A for 12 Volt running and the botton B for 24 Volt.
For changing power it is necessary to disconnect the current supply unscrewing the screw Fand then connecting the G wire to the junction-box of requested power.

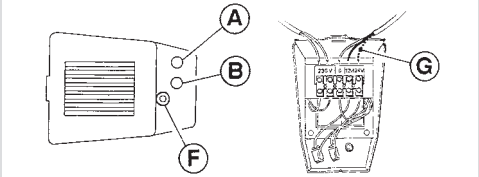

DOMESTIC PLUGS, SOCKETS AND MULTI-OUTLET SOCKETS

REFERENCE STANDARDS

CEI 23-50
Socket-outlets for household and similar purposes.
Part 1: general requirements.

QUALITY MARKS

VERSIONS

Plugs with straight outlet

Flat plugs with angled outlet

Trailing socket with straight outlet

TECHNICAL CHARACTERISTICS

Rated current:	**10A-16A**
Rated voltage:	**250V~**
Frequency:	**50Hz**
Insulating voltage:	**250V~**
Protection degree:	**IP20D**
Operating ambient temperature according to the reference standard:	**-15°C +35°C**
Max operating ambient temperature:	**60°C**
Cabling capacity of the terminals:	**10A: 0,75 - 1,5mm²** **16A: 0,75 - 2,5mm²**
Glow wire test:	**750°C**
Halogen free:	**Yes**
Material:	**Engineering plastic**
Colour:	**White RAL 9010** **Black RAL 9011**

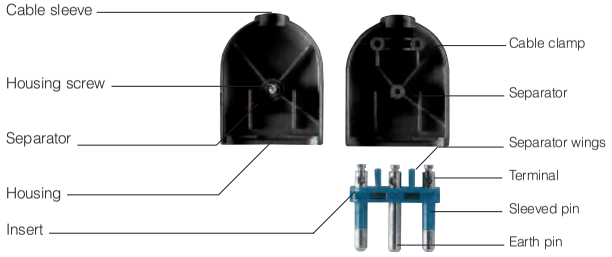

BEHAVIOUR WITH CHEMICAL AND ATMOSPHERIC AGENTS

Saline solution	Acids		Bases		Solvents				Mineral oil	UV rays
	Concentrated	Diluted	Concentrated	Diluted	Hexane	Benzol	Acetone	Alcohol		
Resistant	Limited Resistance	Resistant	Limited Resistance	Limited Resistance	Resistant	Not Resistant	Not Resistant	Resistant	Limited Resistance	Resistant

APPLICATION EXAMPLES

DOMESTIC ADAPTORS

VERSIONS

One-way adaptors

Multi-way adaptors

REFERENCE STANDARDS

CEI 23-57
Plugs and sockets for domestic and similar applications.
Part 2: specific requirements for adaptors.

QUALITY MARKS

TECHNICAL CHARACTERISTICS

Rated current:	**10A-16A**
Rated voltage:	**250V~**
Frequency:	**50Hz**
Insulating voltage:	**250V~**
Protection degree:	**IP20D**
Operating ambient temperature according to the reference standard:	**-15°C +35°C**
Max operating ambient temperature:	**60°C**
Glow wire test:	**750°C**
Halogen free:	**Yes**
Material:	**Engineering plastic**
Colour:	**White RAL 9010** **Black RAL 9011**

BEHAVIOUR WITH CHEMICAL AND ATMOSPHERIC AGENTS

Saline solution	Acids		Bases		Solvents				Mineral oil	UV rays
	Concentrated	Diluted	Concentrated	Diluted	Hexane	Benzol	Acetone	Alcohol		
Resistant	Limited Resistance	Resistant	Limited Resistance	Limited Resistance	Resistant	Not Resistant	Not Resistant	Resistant	Limited Resistance	Resistant

APPLICATION EXAMPLES

EMPTY DISTRIBUTION ASSEMBLIES

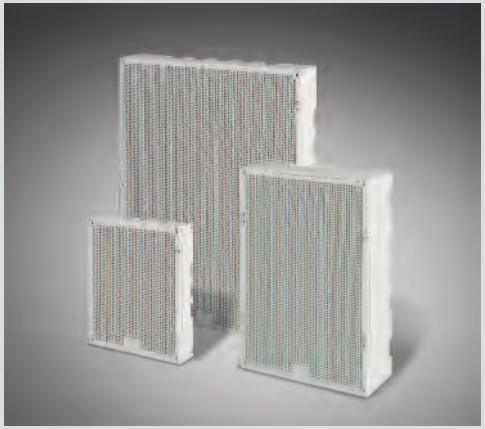

VERSIONS

1 module

2 module

4 module

REFERENCE STANDARDS

EN 60670-1
Boxes and enclosures for electrical accessories for household and similar fixed electrical installations.
Part 1: general requirements.

QUALITY MARKS

TECHNICAL CHARACTERISTICS

Protection degree:	**IP41**
Operating ambient temperature according to the reference standard:	**-15°C +35°C**
Max. operating ambient temperature	**60°C**
Glow Wire test:	**650°C**
Material:	**Engineering plastic**
IK degree at 20°C:	**IK08**
Insulation class:	**Class II (double insulation)**
Halogen free:	**Yes**
Colour:	**Grey RAL 7035**

BEHAVIOUR WITH CHEMICAL AND ATMOSPHERIC AGENTS

Saline solution	Acids		Bases		Solvents				Mineral oil	UV rays
	Concentrated	Diluted	Concentrated	Diluted	Hexane	Benzol	Acetone	Alcohol		
Resistant	Limited Resistance	Resistant	Resistant	Resistant	Resistant	Not Resistant	Not Resistant	Limited Resistance	Limited Resistance	Resistant

APPLICATION EXAMPLES

DISTRIBUTION ASSEMBLIES

VERSIONS

BLOCK1 (110x280x95mm)
- Portable or surface mounting empty units.

BLOCK3 (136x440x114mm)
- Surface mounting
- Panel mounting
- Mobile on appropriate stand
- Portable with cable and plug

BLOCK4 (212x415x114mm)
- Surface mounting
- Panel mounting
- Mobile on appropriate stand
- Portable with cable and plug

BLOCK5 (272x414x110mm)
- Portable or surface mounting empty units.

REFERENCE STANDARDS

EN 62208
Empty enclosure for low-voltage switchgear and controlgear assemblies.
Part 1: general requirements.

EN 60670-24
Boxes and enclosures for electrical accessories for household and similar fixed electrical installations.
Part 24: particular requirements for enclosures for housing protective devices and other power dissipating electrical equipment.

EN 61439-3
Low-voltage switchgear and controlgear assemblies.
Part 3: distribution boards intended to be operated by ordinary persons (DBO).

EN 61439-4
Low-voltage switchgear and controlgear assemblies.
Part 4: particular requirements for assemblies for construction sites (ACS)

EN 60670-1
Boxes and enclosures for electrical accessories for household and similar fixed electrical installations.
Part 1: general requirements.

CEI 23-49
Enclosure for accessories for household and similar fixed electrical installations.
Part 2: particular requirements for anclosures for protection devices and accessories dissipating a considerable power in normal use.

BEHAVIOUR WITH CHEMICAL AND ATMOSPHERIC AGENTS

Saline solution	Acids		Bases		Solvents				Mineral oil	UV rays
	Concentrated	Diluted	Concentrated	Diluted	Hexane	Benzol	Acetone	Alcohol		
Resistant	Limited Resistance	Resistant	Limited Resistance	Resistant	Not Resistant	Not Resistant	Not Resistant	Limited Resistance	Resistant	Resistant

BLOCK3 Series

BLOCK4: built-in foldaway handle.

BLOCK4: Metal stand.

TECHNICAL CHARACTERISTICS

Rated current:	**IP44-IP66**
Operating ambient temperature according to the reference standard:	**-25°C +35°C**
Max. operating ambient temperature:	**60°C**
Glow Wire test:	**650°C**
Material:	**Engineering plastic**
IK degree at 20°C:	**IK08**
Cable inlet:	**PG13,5 - PG21**
Insulation class:	**Class II (double insulation)** ⧈
Dissipable power according to CEI 23-49 standard:	**8-15W**
Colour:	**Grey RAL 7035**

QUALITY MARKS

DOMESTIC PLUGS, SOCKET AND MULTI-OUTLET SOCKETS

VERSIONS

Plugs with straight outlet

Flat plugs with angle outlet

Trailing socket with straight outlet

Multi-outlet sockets

REFERENCE STANDARDS

CEI 23-50
Plugs and socket outlets for household and similar purposes.
Part 1: general requirements.

CEI 23-124
Plugs and socket outlets for household and similar purposes.
Part 2-7: particular requirements for cord extension set.

QUALITY MARKS

TECHNICAL CHARACTERISTICS

Rated current:	**10A-16A**
Rated voltage:	**250V~**
Frequency:	**50Hz**
Insulating voltage:	**250V~**
Protection degree:	**IP20D**
Operating ambient temperature according to the reference standard:	**-15°C +35°C**
Max operating ambient temperature:	**60°C**
Cabling capacity of the terminals:	**10A: 0,75 - 1,5mm²** **16A: 0,75 - 2,5mm²**
Glow wire test:	**750°C**
Material:	**Engineering plastic**
Colour:	**White RAL 9010** **Black RAL 9011** **Anthracite RAL 7021** **Tinted (transparent)** **Turquoise (transparent)**

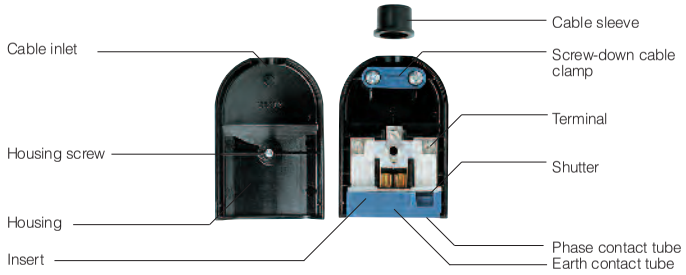

BEHAVIOUR WITH CHEMICAL AND ATMOSPHERIC AGENTS

Saline solution	Acids		Bases		Solvents				Mineral oil	UV rays
	Concentrated	Diluted	Concentrated	Diluted	Hexane	Benzol	Acetone	Alcohol		
Resistant	Limited Resistance	Resistant	Limited Resistance	Limited Resistance	Resistant	Not Resistant	Not Resistant	Resistant	Limited Resistance	Resistant

APPLICATION EXAMPLES

DOMESTIC ADAPTORS

REFERENCE STANDARDS

CEI 23-57
Plugs and sockets for domestic and similar applications.
Part 2: specific requirements for adaptors.

QUALITY MARKS

VERSIONS

One-way adaptors

Multi-way adaptors

With USB

TECHNICAL CHARACTERISTICS

Rated current:	**10A-16A**
Rated voltage:	**250V~**
Frequency:	**50Hz**
Insulating voltage:	**250V~**
Protection degree:	**IP20D**
Operating ambient temperature according to the reference standard:	**-15°C +35°C**
Max operating ambient temperature:	**60°C**
Glow wire test:	**750°C**
Halogen free:	**Yes**
Material:	**Engineering plastic**
Colour:	**White RAL 9010** **Black RAL 9011**

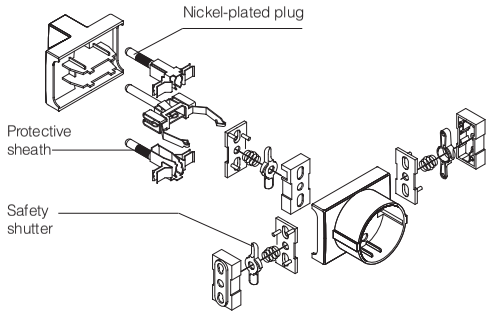

BEHAVIOUR WITH CHEMICAL AND ATMOSPHERIC AGENTS

Saline solution	Acids		Bases		Solvents				Mineral oil	UV rays
	Concentrated	Diluted	Concentrated	Diluted	Hexane	Benzol	Acetone	Alcohol		
Resistant	Limited Resistance	Resistant	Limited Resistance	Limited Resistance	Resistant	Not Resistant	Not Resistant	Resistant	Limited Resistance	Resistant

APPLICATION EXAMPLES

DOMESTIC ADAPTORS AND MULTI-OUTLET SOCKETS WITH OVERVOLTAGE PROTECTION

VERSIONS

Single adaptor socket with special device to protect against voltage overload in the electrical supply

Multi-outlet sockets with lighting protection

Lightning protection devices are fitted with an overload dissipater, a special electric circuit protected by a phase and neutral fast fuse protection having nominal tension of 250V~.
Maximum dissipation of overload energy: 21J.
Minimum overload tension at which dissipation is triggered off: 300V.
Discharge current: 1,2 kA (8/20µs).
When the pilot light is on it means that the overload dissipater is working efficiently.

REFERENCE STANDARDS

CEI 23-50
Plugs and sockets-outlets for household and similar purposes.
Part 1: general requirements.

CEI 23-57
Plugs and sockets for domestic and similar applications.
Part 2: specific requirements for adaptors.

QUALITY MARKS

TECHNICAL CHARACTERISTICS

Rated current:	**10A-16A**
Rated voltage:	**250V~**
Frequency:	**50Hz**
Insulating voltage:	**250V~**
Protection degree:	**IP20D**
Operating ambient temperature according to the reference standard:	**-15°C +35°C**
Max. operating ambient temperature:	**60°C**
Glow Wire test:	**750°C**
Material:	**Engineering plastic**
Colour:	**White RAL 9010** **Tinted (transparent)** **Turquoise blue transparent)**

BEHAVIOUR WITH CHEMICAL AND ATMOSPHERIC AGENTS

Saline solution	Acids		Bases		Solvents				Mineral oil	UV rays
	Concentrated	Diluted	Concentrated	Diluted	Hexane	Benzol	Acetone	Alcohol		
Resistant	Limited Resistance	Resistant	Limited Resistance	Limited Resistance	Resistant	Not Resistant	Not Resistant	Resistant	Limited Resistance	Resistant

APPLICATION EXAMPLES

SWITCH DISCONNECTORS - 16A-160A

VERSIONS

Switch size Y1
Rear panel version (R)
Rear panel mounting screws fixing

Switch size Y2
Rear panel version (R)
Rear panel mounting screws fixing

Switch size Y1
Box version (B)
Base mounting DIN rail fixing

Switch size Y2
Box version (B)
Base mounting DIN rail fixing

Switch size Y3
Box version (B)
Base mounting DIN rail fixing
or screws fixing

Switch size Y4
Box version (B)
Base mounting DIN rail fixing
or screws fixing

Switch size Y5
Box version (B)
Base mounting DIN rail fixing
or screws fixing

REFERENCE STANDARDS

EN 60947-3
Low voltage switchgear and controlgear.
Part 3: switches, disconnectors, switch-disconnectors and fuse-combination unit.

UL 508
Industrial control equipement.

QUALITY MARKS

For specific quality marks please contact our technical service.

TECHNICAL CHARACTERISTICS

Polarity:	**2P - 3P- 3P+N - 4P - 6P - 8P**
Rated current:	**16A* - 20A - 25A* - 32A - 40A - 63A - 80A - 100A - 125A - 160A**
Rated voltage:	**0÷690Vac - 0-600Vdc**
Frequency:	**50-60Hz**
Insulating voltage:	**690Vac**
Protection degree:	**IP65 (front operator)**
Operating ambient temperature according to the reference standard:	**-25°C+40°C**
Max operating ambient temperature:	**60°C**
Glow wire test:	**850°C**
DIN rail fixing:	**Yes**
Front panel fixing:	**Yes (only 16A-20A-32A-40A-63A-80A)**
Connectable auxiliary contacts:	**Yes**

3P+N with late break early make neutral pole.
Front operators box version equipped with door locking in ON position.
Padlockable handle.
* Only for 6 and 8 poles.

4P SWITCH LINKING FOR DC APPLICATION

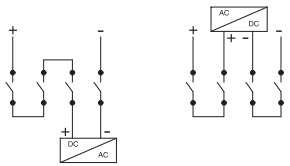

TECHNICAL CHARACTERISTICS 2P, 3P, 3P+N, 4P

Switch size				Y1				Y2		Y4	Y5	
Rated current In				16A	20A	32A	40A	63A	80A	100A	125A	160A
Rated insulation voltage	**Ui**		VAC	690	690	690	690	690	690	800	800	800
Rated impulse withstand voltage	**Uimp**		kV	4	4	4	4	4	4	8	8	8
Thermal current	**Ith/Ithe**		A	30	30	40	40	63	86	100	125	160
Rated operational current – Ie	**AC21A** Resistive loads, including moderate overloads	415V	A	16	20	32	40	63	80	100	125	160
		500V	A	16	20	32	32	63	80	100	125	160
		690V	A	16	20	32	32	63	80	100	125	160
	AC22A Mixed resistive and inductive loads, including moderate overloads	415V	A	16	20	32	40	63	80	100	125	160
		500V	A	16	20	32	32	63	80	100	125	160
		690V	A	16	20	32	32	63	80	-	125	160
	AC23A Switching of motor loads or other highly inductive loads (3 phase / 3 pole)	415V	A	16	20	32	35	63	67	100	125	160
		500V	A	16	20	25	25	40	67	-	125	125
		690V	A	16	20	25	25	30	38	-	100	100
	AC23 Rated operational power (°)	415V	Kw	7.5	9	15	18.5	33	37	46	55	69
	AC3 Squirrel-cage motor: starting, switching off motor during running (3 phase / 3 pole)	415V	A	18	18	25	28.5	40	55	-	-	-
		690V	A	-	12	18	20	25	32	-	-	-
	DC22A Mixed resistive and inductive loads, including moderate overloads	250V	A	-	25(*)	32(*)	32(*)	-	-	-	-	-
		600V	A	-	10(*)	10(*)	10(*)	-	-	-	-	-
Rated short time withstand current	**Icw** (1s)		A	400	400	400	400	1500	1500	1500	3000	3000
Conditional short circuit current			KAeff	10	10	10	10	10	10	30	50	50
Associate fuse size for conditional short circuit current - Type gG			A	16	20	32	40	63	80	100	125	125
Flexible wire			mm^2	1.5-10	1.5-10	1.5-10	1.5-10	10-35	10-35	10-50	10-70	10-70
Rigid wire			mm^2	1.5-16	1.5-16	1.5-16	1.5-16	10-35	10-35	10-50	10-70	10-70

(*) Only 4P with 2+2 poles in series.
(°) This values are given for guidance and may vary according to the specifics provided by the motor manufacturer.

TECHNICAL CHARACTERISTICS 6P, 8P

Switch size				Y3				Y4			Y5	
Rated current In				16A	25A	32A	40A	63A	80A	100A	125A	160A
Rated insulation voltage	**Ui**		VAC	800	800	800	800	800	800	800	800	800
Rated impulse withstand voltage	**Uimp**		kV	8	8	8	8	8	8	8	8	8
Thermal current	**Ith/Ithe**		A	16	25	32	40	63	80	100	125	160
Rated operational current – Ie	**AC21A** Resistive loads, including moderate overloads	415V	A	16	25	32	40	63	80	100	125	160
		500V	A	16	25	32	40	63	160	80	125	160
		690V	A	16	25	32	40	63	160	80	125	160
	AC22A Mixed resistive and inductive loads, including moderate overloads	415V	A	16	25	32	40	63	160	80	125	160
		500V	A	16	25	32	40	63	160	80	125	160
		690V	A	16	25	32	40	40	40	40	125	160
	AC23A Switching of motor loads or other highly inductive loads (3 phase / 3 pole)	415V	A	16	25	32	40	63	80	100	125	160
		500V	A	16	25	32	40	63	63	63	125	125
		690V	A	16	25	25	25	32	32	32	100	100
	AC23 Rated operational power (°)	415V	kW	7,5	11	15	18,5	35	37	46	55	69
Rated short time withstand current	**Icw** (1s)		A	1100	1100	1100	1100	1500	1500	1500	3000	3000
Conditional short circuit current			KAeff	50	50	50	50	50	50	30	50	50
Associate fuse size for conditional short circuit current - Type gG			A	16	25	32	40	63	80	100	125	125
Flexible wire			mm^2	4-25	4-25	4-25	4-25	10-50	10-50	10-50	10-70	10-70
Rigid wire			mm^2	4-25	4-25	4-25	4-25	10-50	10-50	10-50	10-70	10-70

(°) This values are given for guidance and may vary according to the specifics provided by the motor manufacturer.

HIGH RATING SWITCH DISCONNECTORS - 160A-1600A

REFERENCE STANDARDS

EN 60947-3

Low voltage switchgear and controlgear.
Part 3: switches, disconnectors, switch-disconnectors and fuse-combination unit.

VERSIONS

Switch size K2
Box version (B)
Base mounting screws fixing

Switch size K3
Box version (B)
Base mounting screws fixing

Switch size K4
Box version (B)
Base mounting screws fixing

Switch size K5
Box version (B)
Base mounting screws fixing

Switch size K6
Box version (B)
Base mounting screws fixing

TECHNICAL CHARACTERISTICS

Polarity:	**3P-3P+N**
Rated current:	**160A-200A-250A-315A-400A 500A-630A-800A-1000A 1250A-1600A (*)**
Protection degree:	**IP65 (front operator)**
Operating ambient temperature according to the reference standard:	**-25°C +40°C**
Max operating ambient temperature:	**+60°C**

3P+N with late break early make neutral pole.
Front operators box version equipped with door locking in ON position.
Padlockable handle.
Full current neutral pole up to 1250A.
(*) Neutral pole 1250A.
Full current neutral pole available on request.

TECHNICAL CHARACTERISTICS 3P, 3P+N

Switch size				K2			K3			K4	K5			K6
Rated current In				**160**	**200**	**250**	**315**	**400**	**500**	**630**	**800**	**1000**	**1250**	**1600 (*)**
Rated insulation voltage			(V)	1000	1000	1000	1000	1000	1000	1000	1000	1000	1000	1000
Impulse withstand voltage			(kV)	12	12	12	12	12	12	12	12	12	12	12
Rated thermal current			(A)	160	200	250	315	400	500	630	800	1000	1250	1600
Rated operational current - Ie	**AC21A** Resistive loads, including moderate overloads	415V	(A)	160	200	250	315	400	500	630	800	1000	1250	1600
		500V	(A)	160	200	250	315	400	500	630	800	1000	1250	1600
		690V	(A)	160	200	250	315	400	500	630	800	1000	1250	1250
	AC22A Mixed resistive and inductive loads, including moderate overloads	415V	(A)	160	200	250	315	400	500	630	800	1000	1250	1600
		500V	(A)	160	200	250	315	400	400	630	800	1000	1250	1250
		690V	(A)	160	200	250	315	400	400	630	800	1000	1250	400
	AC23A Switching of motor loads or other highly inductive loads (3 phase / 3 pole)	415V	(A)	160	200	250	315	400	500	630	800	1000	1250	1250
		500V	(A)	125	160	200	250	315	315	500	800	800	800	800
		690V	(A)	100	125	160	200	250	250	400	400	400	400	400
	AC23A Rated operational power (°)	415V	kW	85	105	130	165	200	210	330	420	525	630	630
Rated making capacity		415V AC23	(A)	1600	2000	2500	3150	4000	4000	6300	6300	6300	6300	6300
Rated breaking capacit		415V AC23	(A)	1280	1600	2000	2520	3200	3200	5040	5040	5040	5040	5040
Short circuit withstand current 1sec			(kA)	8	8	8	13	13	13	26.5	35	35	35	60
Short circuit withstand current 0.25 sec			(kA)	16	16	16	26	26	26	53	70	70	70	120
Short circuit making capacity		415V	(kA)	13.5	13.5	13.5	26	26	26	30	73.5	73.5	73.5	105
Rated fuse short-circuit current	Back up fuse		(A)	160	200	250	315	400	400	630	800	1000	1000	-
	R.M.S value		(kA)	100	50	50	50	50	50	50	100	100	100	-
	Peak value		(kA)	16	20	25	25	30	30	40	70	90	100	-
Flexible wire			mm^2	120	120	120	185	2x150	2x150	2x185	2x240	-	-	-
Bars dimension			mm	20x5	20x5	20x5	2x (25x4)	2x (25x4)	2x (25x4)	2x (32x6)	2x (50x5)	2x (50x6)	2x (50x8)	2x (80x102)

(*) Neutral pole 1250A
Full current neutral pole available on request.
(°) This values are given for guidance and may vary according to the specifics provided by the motor manufacturer.

CHANGE-OVER SWITCHES I/O/II - 16A-160A

REFERENCE STANDARDS

EN 60947-3

Low voltage switchgear and controlgear.
Part 3: switches, disconnectors, switch-disconnectors and fuse-combination unit.

VERSIONS

Switch size Y3
Box version (B)
Base mounting DIN rail fixing or screws fixing

Switch size Y4
Box version (B)
Base mounting DIN rail fixing or screws fixing

Switch size Y5
Box version (B)
Base mounting DIN rail fixing or screws fixing

TECHNICAL CHARACTERISTICS

Polarity:	**3P-3P+N**
Rated current:	**16A-25A-32A-40A-63A 80A-100A-125A-160A**
Protection degree:	**IP65**
Operating ambient temperature according to the reference standard:	**-25°C +40°C**
Max operating ambient temperature:	**+60°C**

3P+N with late break early make neutral pole.
Front operators box version equipped with door locking in ON position.
Padlockable handle.

TECHNICAL CHARACTERISTICS 3P, 3P+N

Switch size				Y3				Y4			Y5	
Rated current In				16A	25A	32A	40A	63A	80A	100A	125A	160A
Rated insulation voltage	**Ui**		VAC	800	800	800	800	800	800	800	800	800
Rated impulse withstand voltage	**Uimp**		kV	8	8	8	8	8	8	8	8	8
Thermal current	**Ith/Ithe**		A	16	25	32	40	63	80	100	125	160
Rated operational current - Ie	**AC21A** Resistive loads, including moderate overloads	415V	A	16	25	32	40	63	80	100	125	160
		500V	A	16	25	32	40	63	160	80	125	160
		690V	A	16	25	32	40	63	160	80	125	160
	AC22A Mixed resistive and inductive loads, including moderate overloads	415V	A	16	25	32	40	63	160	80	125	160
		500V	A	16	25	32	40	63	160	80	125	160
		690V	A	16	25	32	40	40	40	40	125	160
	AC23A Switching of motor loads or other highly inductive loads (3 phase / 3 pole)	415V	A	16	25	32	40	63	80	100	125	160
		500V	A	16	25	32	40	63	63	63	125	125
		690V	A	16	25	25	25	32	32	32	100	100
Rated short time withstand current	**Icw** (1s)		A	1100	1100	1100	1100	1500	1500	1500	3000	3000
Conditional short circuit current			KAeff	50	50	50	50	50	50	30	50	50
Associate fuse size for conditional short circuit current - Type gG			A	16	25	32	40	63	80	100	125	125
Flexible wire			mm²	4-25	4-25	4-25	4-25	10-50	10-50	10-50	10-70	10-70
Rigid wire			mm²	4-25	4-25	4-25	4-25	10-50	10-50	10-50	10-70	10-70

APPLICATION EXAMPLES

PHOTOVOLTAIC/DC SWITCH DISCONNECTORS - 450-800 DC

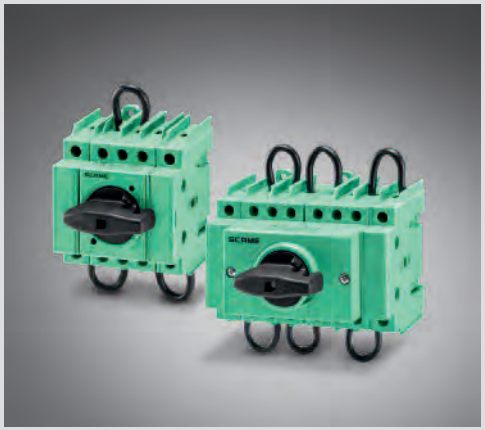

REFERENCE STANDARDS

EN 60947-3
Low voltage switchgear and controlgear.
Part 3: switches, disconnectors, switch-disconnectors and fuse-combination unit.

IEC 60364-7-712
Requirements for special installations or locations
Solar photovoltaic (RV) power supply systems.

VERSIONS

Switch size Y1
Box version (B)
Base mounting DIN rail fixing

Switch size Y3
Box version (B)
Base mounting DIN rail fixing
or screws fixing

Switch size Y5
Box version (B)
Base mounting DIN rail fixing
or screws fixing

TECHNICAL CHARACTERISTICS

Poles in series:	**4P-5P-6P-8P**
Rated current (800V):	**10A-15A-16A-20A-25A-30A-40A**
Protection degree:	**IP65 (front operator)**
Operating ambient temperature according to the reference standard:	**-25°C +40°C**
Max operating ambient temperature:	**+60°C**

Front operators box version equipped with door locking in ON position. Padlockable handle.

Scame embraces completely the renewable energy sources philosophy and the respect for the environment.
In our production plant and office building we have installed 250kWp of photovoltaic system. We follow up this field in several countries with a wide range of products.
From our experience is born the new range of DC Isolators specific for photovoltaic systems.
In according to the IEC 60364-7-712, in every photovoltaic installation it is necessary to isolate the photovoltaic panel from the rest of the system, DC Isolators must have a higher performance than the traditional AC Isolators because breaking direct current is more difficult than breaking alternating current, and furthermore in a photovoltaic system the voltage can reach even 800V.

The current and voltage values changes depending on the combination of the photovoltaic cells. DC Isolator range has been set up focusing on all of the main photovoltaic installations in order to get a range as essential as possible, simplify the choice of the customer and for have the maximum quality and technical characteristics. In the meantime we are improving and up grading constantly our products, following and anticipating the change that the market requires due to the incentives available. Scame ISOLATORS Series includes also a complete range of AC Isolators, essential to make a photovoltaic system in compliance with IEC 60364-7-712.
Finally in the photovoltaic range it is available a huge range of water tight cabinets and consumer unit suitable for make distribuition board & export control.

TECHNICAL CHARACTERISTICS 4P-5P-6P-8P

Switch size				Y1	Y3				Y5
Rated current In				16A	15A	20A	25A	30A	40A
Rated insulation voltage	**Ui**		VAC	690	1500	1500	1500	1500	1500
Rated impulse withstand voltage	**Uimp**		kV	4	8	8	8	8	8
Thermal current	**Ith/Ithe**		A	30	63	63	63	63	125
Number of poles in series				4	4	5	6	8	8
Rated operational current - Ie	**DC21A** Resistive loads, including moderate overloads	300V	A	32	-	-	-	-	-
		400V	A	-	30	35	40	60	80
		450V	A	16	-	-	-	-	-
		500V	A	-	30	35	40	45	65
		600V	A	-	20	25	40	40	60
		750V	A	-	15	20	25	30	40
		800V	A	-	15	20	25	30	40
Rated short time withstand current	**Icw** (1s)		A	400	1100	1100	1100	1100	3000
Flexible wire			mm^2	1.5-10	16	16	16	16	70
Rigid wire			mm^2	1.5-10	16	16	35	16	70

POSSIBLE CONTACT WIRINGS

SWITCH LINKING

In order to make easier the work of the installer, it is possible to choose the manner of wiring of the poles in series. In this way the incoming and the outgoing can be varied both on the top side and on the bottom side. In the packaging jumpers are supplied to cover the chosen configuration.

590.DC0815 - 590.DC0416 - (4 POLES IN SERIES) - 3 JUMPERS SUPPLIED

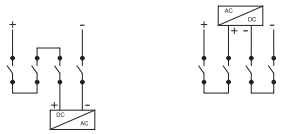

590.DC0820 - (5 POLES IN SERIES) - 4 JUMPERS SUPPLIED

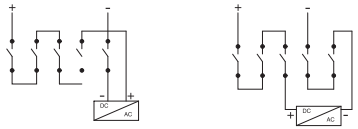

590.DC0825 - (6 POLES IN SERIES) - 5 JUMPERS SUPPLIED

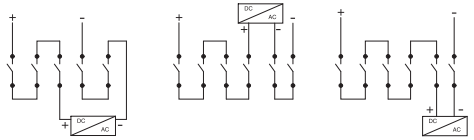

590.DC0830 - 590.DC0840 - (8 POLES IN SERIES) - 8 JUMPERS SUPPLIED

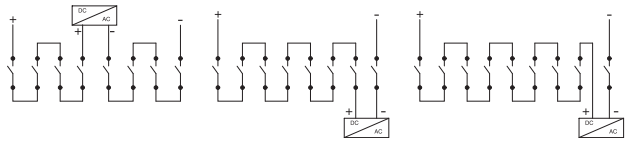

SWITCH DISCONNECTORS WITH FUSES - 16A-630A

REFERENCE STANDARDS

EN 60947-3

Low voltage switchgear and controlgear.
Part 3: switches, disconnectors, switch-disconnectors and fuse-combination unit.

VERSIONS

Switch size YF1
Box version (B)
Base mounting DIN rail fixing

Switch size KF1
Box version (B)
Base mounting screws fixing

Switch size KF2
Box version (B)
Base mounting screws fixing

Switch size KF3
Box version (B)
Base mounting screws fixing

Switch size KF4
Box version (B)
Base mounting screws fixing

Switch size KF5
Box version (B)
Base mounting screws fixing

TECHNICAL CHARACTERISTICS

Polarity:	**2P-3P-3P+N (16A-32A) 3P-3P+N (63A-100A-125A-160A-200A-250A-315A-400A-630A)**
Rated current:	**16A-32A-63A-100A-125A-160A-200A-250A-315A-400A-630A**
Protection degree:	**IP65 (front operator)**
Operating ambient temperature according to the reference standard:	**-25°C +40°C**
Max operating ambient temperature:	**+60°C**

3P+N with late break early make neutral pole.
Front operators box version equipped with door locking in ON position.
Padlockable handle.

TECHNICAL CHARACTERISTICS 2P,3P, 3P+N

Switch size				YF1		KF1		KF2			KF3		KF4		KF5
Rated current In				16A	32A	63A	80A	100A	125A	160A	200A	250A	315A	400A	630A
Rated insulation voltage	Ui		VAC	690	690	1000	1000	1000	1000	1000	1000	1000	1000	1000	1000
			VDC	400	400	1500	1500	1500	1500	1500	1500	1500	1500	1500	1500
Rated impulse withstand voltage	Uimp		kV	4	4	8	8	12	12	12	12	12	12	12	12
Thermal current	Ith/Ithe		A	25	32	63	80	100	125	160	200	250	315	400	630
Rated operational current - Ie	AC21A Resistive loads, including moderate overloads	400V	A	-	-	63	80	100	125	160	200	250	315	400	630
		500V	A	-	-	63	80	100	125	160	200	250	315	400	630
		690V	A	25	32	63	80	100	125	160	200	250	315	400	630
	AC22A Mixed resistive and inductive loads, including moderate overloads	400V	A	-	-	63	80	100	125	160	200	250	315	400	630
		500V	A	-	-	63	80	100	125	160	200	250	315	400	630
		690V	A	30	32	63	80	100	125	160	200	250	315	400	630
	AC23A Switching of motor loads or other highly inductive loads (3 phase / 3 pole)	400V	A	-	-	63	80	100	125	160	200	250	315	400	630
		500V	A	-	-	45	63	80	100	125	160	200	250	315	500
		690V	A	16	25	32	45	63	80	100	125	160	200	250	400
	DC21A Resistive loads, including moderate overloads	220V	A	25	32	63	80	100	125	160	200	250	315	400	630
		400V	A	-	-	-	-	100	125	160	200	250	315	400	630
		600V	A	-	-	-	-	-	-	-	-	-	315	400	630
	DC22A Mixed resistive and inductive loads, including moderate overloads	220V	A	20	32	63	80	100	125	160	200	250	315	400	630
		400V	A	-	-	-	-	100	125	160	200	250	315	400	630
		600V	A	-	-	-	-	-	-	-	-	-	315	400	630
	DC23A Switching of highly inductive loads (e.g. series motors)	220V	A	-	-	50	50	100	125	160	160	160	250	250	400
		400V	A	-	-	-	-	100	125	160	-	-	-	-	-
Short circuit protection	Conditional short circuit current		KAeff	10	10	100	100	50	50	50	50	50	50	50	50
	Associate fuse size for conditional short circuit current		A	16	32	63	80	100	125	160	200	250	315	400	630
	Fuse type			gG	gG	DIN/BS	DIN/BS	DIN/BS	DIN/BS	DIN/BS	DIN/BS	DIN/BS	DIN/BS	DIN/BS	DIN/BS
Rated making capacity at 420V c.a. cos 0,35 (0,45°)			A	160	320	630	800	1000	1250	1600	2000	2500	3150	4000	6300
Rated making capacity at 420V c.a. cos 0,35 (0,45°)			A	-	-	504	640	800	1000	1280	1600	2000	2520	3200	5040
Flexible wire			mm²	1,5-10	1,5-10	25	25	70	70	70	120	120	240	240	2x185
			AWG	16-8	16-8										
Bars dimension			mm	-	-	12x3	12x3	16x4	16x4	16x4	25x4	25x4	32x5	32x5	2x40x6

CONNECTING ACCESSORIES

VERSIONS

Insulated wire connectors

Multi-way wire connectors

Terminal strips

REFERENCE STANDARDS

IEC 60998-1
Connecting devices for low voltage circuits for household and similar purposes.
Part 1: general requirements.

IEC 60998-2-1
Connecting devices for low voltage circuits for household and similar purposes.
Part 2-1: particular requirements for connecting devices as separate entities with screw-type clamping units.

QUALITY MARKS

IK 03

TECHNICAL CHARACTERISTICS

Rated current:	**17,5A-125A**
Rated voltage:	**250V~/450V~/750V~**
T marking:	**T85 - T140**
Glow Wire test:	**850°C**
Material:	**Engineering plastic**
IK degree at 20°C:	**IK06 - IK07** **Insulated wire connector**
	IK07 - IK08 **Multi-way wire connectors**
	IK07 - IK09 **Terminal strips**
Colour:	**White - Black - Green Light Blue - Grey - Brown - Trasparent**

APPLICATION EXAMPLES

CONNECTION CAPACITY

Connec. capacity mm²	Rated current A	Type of conductor	T85 DOMINO CONNECTORS Conductors size (mm²) and number										
			0,75	1	1,5	2,5	4	6	10	16	25	35	50
10	57	rigid	-	-	1÷4	1÷3	1÷2	1	1	-			
		flexible	-	-	1÷4	1÷3	1÷2	1	-	-			
16	76	rigid	-	-	-	1÷4	1÷3	1÷2	1	1			
		flexible	-	-	-	1÷4	1÷3	1÷2	1	-			

Connec. capacity mm²	Fixing hole for cable Ø mm (•)	Rated current A	Type of conductor	INSULATED WIRE CONNECTORS - SINGLE AND IN STRIPS Conductors size (mm²) and number										
				0,75	1	1,5	2,5	4	6	10	16	25	35	50
1,5	3	17,5	rigid	2÷4	1÷3	1÷2	1							
			flexible	2÷4	1÷3	1÷2	1							
2,5	4	24	rigid		3÷5	2÷3	1÷2	1						
			flexible		2÷4	2÷3	1÷2	1						
4	4,6	32	rigid			3÷4	2÷3	1÷2	1					
			flexible			3÷4	2÷3	1÷2	1					
6	6	41	rigid			3÷5	2÷3	1÷2	1÷2	1				
			flexible			3÷4	2÷3	1÷2	1÷2	1				
10	8	57	rigid					3÷5	2÷4	1÷2	1			
			flexible					3÷4	2÷3	1÷2	1			
16	10	76	rigid						3÷5	2÷3	1÷2	1		
			flexible						3÷4	2÷3	1÷2	1		
25	12	101	rigid							2÷3	2÷3	2	1	
			flexible						3÷5	2÷3	2÷3	2	1	
35	14	125	rigid								2÷4	1÷3	1÷2	1
			flexible								2÷4	1÷3	1÷2	1

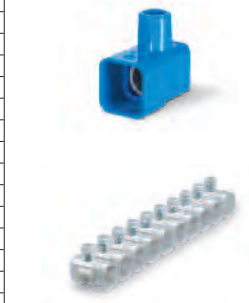

Connec. capacity mm²	Fixing hole for cable Ø mm (•)	Rated current A	Type of conductor	T140 AND T85 TERMINAL STRIPS Conductors size (mm²) and number									
				0,75	1	1,5	2,5	4	6	10	16	25	35
2,5	2,7	24	rigid	1÷3	1÷2	1	1						
			flexible	1÷2	1÷2	1	1						
4	3	32	rigid	2÷4	1÷3	1÷2	1	1					
			flexible	1÷2	1÷2	1	1	1					
6	3,5	41	rigid			1÷3	1÷2	1	1				
			flexible			1÷3	1÷2	1					
10	4,4	57	rigid			1÷2	1÷2	1	1	1			
			flexible			1÷2	1÷2	1	1				
16	5,5	76	rigid				2÷3	1÷2	1	1	1		
			flexible				2	1÷2	1	1			
25	7,4	101	rigid					2÷4	2÷3	1	1	1	
			flexible					2÷3	1÷2	1	1		
35	9	125	rigid						2÷4	1÷2	1	1	1
			flexible						2÷3	1÷2	1	1	

The table refers to a single terminal and to connections from one side only.

Connec. capacity mm²	Rated current A	Type of conductor	MULTI-WAY WIRE CONNECTORS - T85 Conductors size (mm²) and number									
			1	1,5	2,5	4	6	10	16	25	35	50
6	41	rigid		1÷6	1÷4	1÷3	1÷2					
	41	flexible	1÷7	1÷5	1÷4	1÷3	1÷2					
16	76	rigid					1	1	1			
	76	flexible					1÷4	1÷2	1			
35	125	rigid							1	1	1	
	125	flexible							1÷2	1	1	

JUNCTION BOXES FOR ELECTRICAL INSTALLATIONS

VERSIONS

CUBIK 650 Series
Glow wire 650°C halogen free:
- With cable sleeve and release cover
- With cable sleeve and 1/4 turn screw cover
- With blank sides and 1/4 turn screw cover

CUBIK 960 Series
Glow wire 960°C:
- With cable sleeve and release cover
- With cable sleeve and 1/4 turn screw cover
- With blank sides and 1/4 turn screw cover

CUBIK 960 Series
Glow wire 960°C (red versions):
- With cable sleeve and release cover
- With cable sleeve and 1/4 turn screw cover
- With blank sides and 1/4 turn screw cover

REFERENCE STANDARDS

EN 60670-1
Boxes and enclosures for electrical accessories for household and similar fixed electrical installations.
Part 1: general requirements.

EN 60670-22
Boxes and enclosures for electrical accessories for household and similar fixed electrical installations.
Part 22: particular requirements for connecting boxes and enclosures.

QUALITY MARKS

TECHNICAL CHARACTERISTICS

Protection degree:	**IP55**
Operating ambient temperature according to the reference standard:	**-25°C +35°C**
Max. operating ambient temperature:	**60°C**
Glow Wire test:	**650°C/960°C**
Material:	**Engineering plastic**
IK degree at 20°C:	**IK07**
Cable inlets:	**Cable sleeve / Blank sides**
Halogen free:	**Yes (CUBIK 650 Series)**
DIN rail fixing:	**Yes**
Colour:	**Grey RAL 7035 - Red**
Insulation class:	**Class II (double insulation)**

BEHAVIOUR WITH CHEMICAL AND ATMOSPHERIC AGENTS

Saline solution	Acids		Bases		Solvents				Mineral oil	UV rays
	Concentrated	Diluted	Concentrated	Diluted	Hexane	Benzol	Acetone	Alcohol		
Resistant	Limited Resistance	Resistant	Resistant	Resistant	Not Resistant	Not Resistant	Not Resistant	Limited Resistance	Resistant	Resistant

Glow wire 960°C versions (also in red) are identifiable by the symbol marked on the external side.

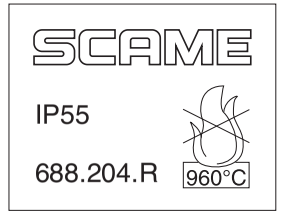

APPLICATION EXAMPLES

Internal fixing system

Connecting boxes up to 80x80x40mm dimensions feature two internal knock out fixing slots.
Connecting boxes over 100x100x50mm dimensions feature four internal knock out fixing slots.

Back fixing system

Versions up to 80x80x40mm dimensions can also be screwed to existing fixings on the wall. The fixings feature has to be an external M7 threaded pin, which is designed to fit with the base of boxes.
In addition, specific reeding is on the backside so to avoid any accidental rotational movement of the box.

Capacity

Series CUBIK connector blocks are very spacious; raised walls increase the internal room, making any cabling operation easier.

Cables sleeves

Cable sleeve provided with the kit consist of 5 different levels allowing the identification of pipe and wire diameters, making precise cut for cable easier and cable positioning quicker.
Versions up to 80x80x40mm dimensions are equipped with 23mm-diameter cable sleeve that fit 5, 8, 12, 16 or 20mm-diameter wires or pipes; on the contrary, versions up to 100x100x50mm dimensions are provided with 29mm-diameter cable sleeve that fit 5, 12,m 16, 20 and 25mm diameters. The cable sleeve completely fit the pipe/wire in a reliable way.

External fixing system

Connecting boxes above 100x100x50mm dimensions can also be wall mounted by four fixing slots featured outside the cabling area to avoid piercing the box.

Insulating caps

All versions are provided with caps to provide total insulation.

Closing

The cover is available either as a pressure-type for the small boxes or closed with four 1/4 - turn screws for the larger boxes.
The 1/4 - turn screw versions feature 0-1 markings indicating Open-close.

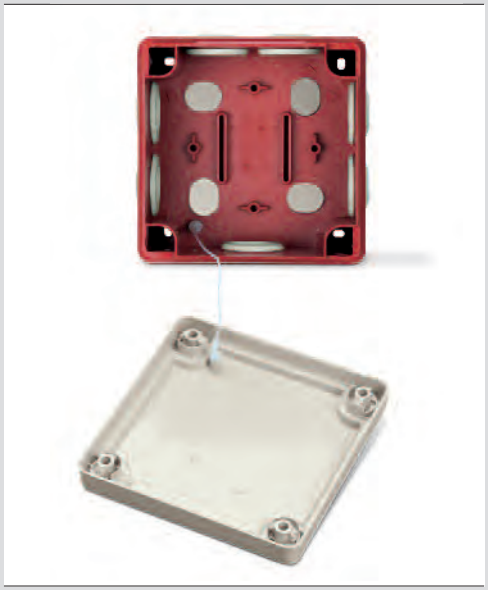

Captive cover

This cover has been designed for all versions with a support cable to retain the cover.

Wall fixing system.

JUNCTION BOXES FOR ELECTRICAL INSTALLATIONS

VERSIONS

- With cable sleeve and release cover

- With cable sleeve and 1/4 turn screw cover

- With blank sides and 1/4 turn screw cover

REFERENCE STANDARDS

EN 60670-1
Boxes and enclosures for electrical accessories for household and similar fixed electrical installations.
Part 1: general requirements.

EN 60670-22
Boxes and enclosures for electrical accessories for household and similar fixed electrical installations.
Part 22: particular requirements for connecting boxes and enclosures.

TECHNICAL CHARACTERISTICS

Protection degree:	**IP55**
Operating ambient temperature according to the reference standard:	**-25°C +35°C**
Max. operating ambient temperature:	**60°C**
Glow Wire test:	**650°C**
Material:	**Engineering plastic**
IK degree at 20°C:	**IK07**
Cable inlets:	**Cable sleeve / Blank sides**
Halogen free:	**No**
DIN rail fixing:	**Yes**
Colour:	**Grey RAL 7035**
Insulation class:	**Class II (double insulation)** ⧈

BEHAVIOUR WITH CHEMICAL AND ATMOSPHERIC AGENTS

Saline solution	Acids		Bases		Solvents				Mineral oil	UV rays
	Concentrated	Diluted	Concentrated	Diluted	Hexane	Benzol	Acetone	Alcohol		
Resistant	Limited Resistance	Resistant	Resistant	Resistant	Not Resistant	Not Resistant	Not Resistant	Limited Resistance	Resistant	Resistant

APPLICATION EXAMPLES

COMPONENTS FOR TELEPHONE INSTALLATIONS

The telephone network is gradually evolving - it's not only voices and sounds that travel along the telephone cable but also digital signals. This important expansion demands new skills from the qualified installer, who is in the position of having to wire "intelligent" buildings, or to transform and adapt traditional telephone installations to conform to the new requirements.

A simple on-off sequence, the presence or absence of agreed tones and signals can make high technology appliances communicate, both in domestic use and in the service industry. The number of appliances connected to the network is multiplying: Internet and digital TV, alarms or help alerts, user and appliance controls and commands - and so, at home and in the office, it all has to be inter-connected within the same installation.

For the qualified installer, Scame is offering a series of products that will satisfy most of the common needs both for wiring up and for expanding a telephone installation.

Surface and flush mounting RJ socket 6/4

Surface mounting RJ Socket 6/4

APPLICATION EXAMPLES

COMPONENTS FOR CLASS 5E TRANSMISSION SYSTEMS

EIA TIA 565/A or /B Standards (the extensions A or B refer to different cabling): this US Standard first introduced the term "CAT. 5" to classify the cabling transmission features and application fields. CAT. 5 equipments are suitable for 100 Mbs up to 100 MHz.
IEC 11801, International Standard for generic cabling. The transmission features are classified according to different.
EN 50173, is similar to U.S. and international standards.

REFERENCE STANDARDS

ANSI/TIA/EIA-568
Commercial Building
Telecommunications Cabling Standard.

ISO/IEC 11801
Information Technology-Generic Cabling
for Customer Premises.

EN 50173
Information technology
Generic cabling systems.

EXAMPLE OF A "CAT. 5E" DATA TRANSMISSION SYSTEM

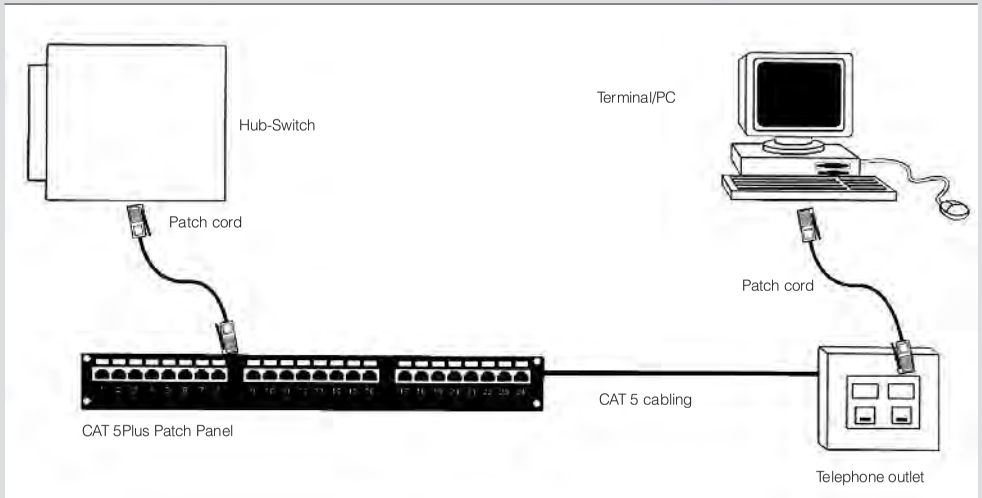

APPLICATION EXAMPLES

EIA/TIA 568A

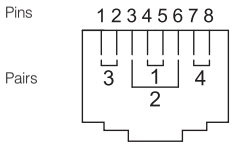

Pin Colours
1- White and green
2- Green
3- White and orange
4- Blue
5- White and blue
6- Orange
7- White and brown
8- Brown

EIA/TIA 568B

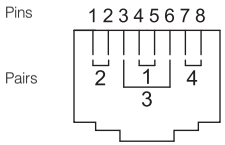

Pin Colours
1- White and orange
2- Orange
3- White and green
4- Blue
5- White and blue
6- Green
7- White and brown
8- Brown

COMPONENTS FOR TV INSTALLATIONS

AERIAL INSTALLATION IS MADE UP OF:

1) The aerial that receives the audio/video signal.
2) The aerial unit for amplifying and mixing the received signal.
3) The distribution network that sends the signal to the user's socket.

In addition, an aerial installation can also be:
- a single aerial installation
- a communal aerial installation.

The aerial installation can be set up to receive radio signals as well as television signals.
Scame offers a series of accessories for completing the distribution network:
- coaxial plugs and sockets for both surface and flush mounting;
- coaxial cable connectors;
- cable dividers and junction boxes.

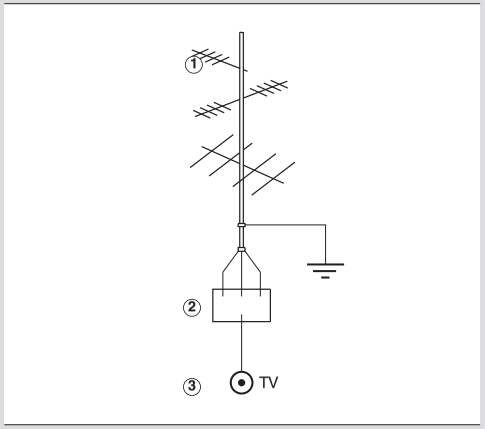

REFERENCE STANDARDS

CEI EN 50083
Communal aerial installations.

IEC 60169
Radio-frequency connectors.

TECHNICAL CHARACTERISTICS OF TV PLUGS

- Direct type (of derivation).
- No attenuation (without devices for splitting the signal).
- Not technical with terminal resistance.
- Not to be connected to other sockets in cascade connection.

COAXIAL USER SOCKETS

In order to guarantee the appropriate use of the installations, the plugs, sockets and T.V. outlets should insure the CEI EN 50083 standards.
- Efficient shuttering, which makes T.V., signals immune to electromagnetic emissions present in the environment.
- Avoid undesirable reflections of signals (impendence adaptation)
- Coupling among various outlets or among various connections of plugs.

APPLICATION EXAMPLES

CONSUMER UNITS AND ENCLOSURES

VERSIONS

Surface mounting - IP66

Surface mounting - IP40
With window

Surface mounting - IP40
Without window

Flush mounting - IP40
With window

QUALITY MARKS

REFERENCE STANDARDS

EN 62208
Empty enclosure for low-voltage switchgear and controlgear assemblies.
Part 1: general requirements.

EN 60670-24
Boxes and enclosures for electrical accessories for household and similar fixed electrical installations.
Part 24: particular requirements for enclosures for housing protective devices and other power dissipating electrical equipment.

EN 61439-3
Low-voltage switchgear and controlgear assemblies.
Part 3: distribution boards intended to be operated by ordinary persons (DBO).

EN 61439-4
Low-voltage switchgear and controlgear assemblies.
Part 4: particular requirements for assemblies for construction sites (ACS)

EN 60670-1
Boxes and enclosures for electrical accessories for household and similar fixed electrical installations.
Part 1: general requirements.

CEI 23-49
Enclosure for accessories for household and similar fixed alectrical installations.
Part 2: particular requirements for anclosures for protection devices and accessories dissipating a considerable power in normal use.

TECHNICAL CHARACTERISTICS

Protection degree:	**IP40-IP66**
Operating ambient temperature according to the reference standard:	**-25°C +35°C**
Max. operating ambient temperature:	**60°C**
Glow Wire test:	**650°C**
Material:	**Engineering plastic**
IK degree at 20°C:	**IP40: IK06 IP66: IK07**
Cable inlets:	**PG/METRIC**
Dissipaple power according to CEI 23-49 standard:	**9÷140W**
Colour:	**Grey RAL 7035 White RAL 9003**
Terminal blocks fixing possibility:	**Yes**
Insulation class:	**Class II (double insulation)** ⧈

BEHAVIOUR WITH CHEMICAL AND ATMOSPHERIC AGENTS

Saline solution	Acids		Bases		Solvents				Mineral oil	UV rays
	Concentrated	Diluted	Concentrated	Diluted	Hexane	Benzol	Acetone	Alcohol		
Resistant	Limited Resistance	Resistant	Limited Resistance	Resistant	Resistant	Not Resistant	Not Resistant	Resistant	Not Resistant	Resistant

APPLICATION EXAMPLES

SURFACE MOUNTING IP66

Hinges: should be snap-fitted into their guides, can be mounted on the left or the right side, in the series versions 12 to 64 DIN modules.

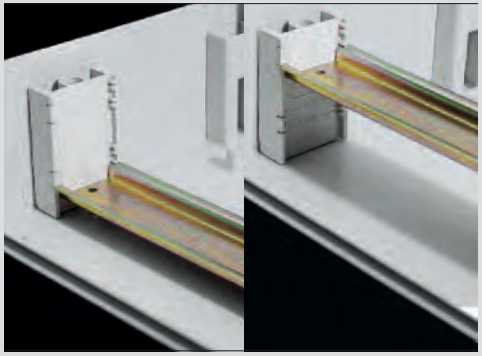

DIN rail (EN 60715): can be placed on different levels.

The semi-transparent tinted window, lockable and sealable.
To open it, just lower the handle provided, snap-closing.

SURFACE MOUNTING IP40

1/4 turn locking device.

Vertical connection.

SOCKETS FOR DOMESTIC APPLICATIONS

REFERENCE STANDARDS

CEI 23-50
Plugs and socket-outlets for household and similar purposes.
Part 1: general requirements.

IEC 60884-1
Plugs and socket-outlets for household and similar purposes.
Part 1: general requirements.

QUALITY MARKS

VERSIONS

Panel mounting flange 50x60mm IP54.

Panel mounting flange 70x87mm IP54.

Surface mounting flange 70x87mm IP54.

TECHNICAL CHARACTERISTICS

Rated current:	**16A**
Rated voltage:	**250V~**
Frequency:	**50Hz**
Insulating voltage:	**690V~**
Protection degree:	**IP44 closed cover/IP54**
Operating ambient temperature according to the reference standard:	**-25°C +35°C**
Max. operating ambient temperature:	**60°C**
Glow Wire test:	**650°C/750°C**
Material:	**Engineering plastic**
Cabling capacity of the terminals:	**1,5mm²÷2x2,5 mm²**

BEHAVIOUR WITH CHEMICAL AND ATMOSPHERIC AGENTS

Saline solution	Acids		Bases		Solvents				Mineral oil	UV rays
	Concentrated	Diluted	Concentrated	Diluted	Hexane	Benzol	Acetone	Alcohol		
Resistant	Not Resistant	Not Resistant	Limited Resistance	Resistant	Not Resistant	Not Resistant	Not Resistant	Limited Resistance	Resistant	Resistant

AVAILABLE STANDARDS

ITALIAN STANDARD P17/11 - 16A
Shuttered socket
CEI 23-50

ITALIAN STANDARD P30 - 16A
Shuttered socket
CEI 23-50

PLURISTANDARD P40 - 16A
Shuttered socket
CEI 23-50

FRENCH STANDARD - 16A
Shuttered socket
NFC 61-314

ARGENTINIAN STANDARD - 10A
Unshuttered socket
IRAM 2071

BRAZILIAN STANDARD - 10A
Unshuttered socket
ABNT NBR 14136:2002

DOMESTIC STANDARD SOCKETS FOR INDUSTRIAL APPLICATIONS

VERSIONS

Flush mounting flange 70x87mm IP66

CABLING CAPACITY OF THE TERMINAL

Rated voltage	Rated current (A)	Sockets	
		Min	Max
250V~	10A	0,75	2,5
	13A	2,5	6
	15A	2,5	6
	16A	1	2,5

(mmq)

REFERENCE STANDARDS

EN 60670-1 (2005-10)
Boxes and enclosures for electrical accessories for household and similar fixed electrical installations.
Part 1: general requirements.

IEC 60884-1
Plugs and socket-outlets for household and similar purposes.
Part 1: general requirements.

TECHNICAL CHARACTERISTICS

Rated current:	**6A-10A-13A-15A-16A**
Rated voltage:	**250V~**
Frequency:	**50Hz**
Insulating voltage:	**250V~**
Protection degree:	**IP66 (also with plug inserted)**
Operating ambient temperature:	**-5°C +60°C**
Installation temperature:	**-20°C +60°C**
Glow Wire test:	**650°C / 850°C (Contact-holder base)**
Halogen free:	**Yes**
Material:	**Engineering plastic**
IK degree at 20°C:	**IK08**
Colour:	**Base: Gray RAL 7035 Cover: tinted polycarbonate**

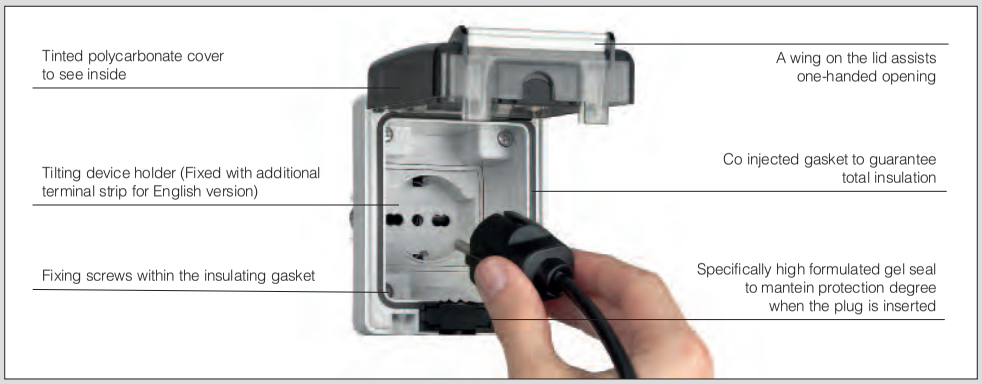

BEHAVIOUR WITH CHEMICAL AND ATMOSPHERIC AGENTS

Saline solution	Acids		Bases		Solvents				Mineral oil	UV rays
	Concentrated	Diluted	Concentrated	Diluted	Hexane	Benzol	Acetone	Alcohol		
Resistant	Limited Resistance	Resistant	Limited Resistance	Resistant	Resistant	Not Resistant	Not Resistant	Resistant	Limited Resistance	Resistant

AVAILABLE STANDARDS

ITALIAN STANDARD P17/11 - 16A
Shuttered socket
CEI 23-50

ITALIAN STANDARD P30 - 16A
Shuttered socket
CEI 23-50

PLURISTANDARD P40 - 16A
Shuttered socket
CEI 23-50

GERMAN STANDARD - 16A
Shuttered socket
DIN VDE 0620

FRENCH STANDARD - 16A
Shuttered socket
NFC 61-314

BRITISH STANDARD - 13A
Shuttered socket
BS 1363-2

BRITISH STANDARD - 15A
Shuttered socket
BS 546

ARGENTINIAN STANDARD - 10A
Unshuttered socket
IRAM 2071

NEW ZEALAND STANDARD - 10A
Unshuttered socket
AS/N25 3112

SWISS STANDARD - 10A
Unshuttered socket
SEV 1011:1998

SOUTH AFRICAN STANDARD - 16A
Shuttered socket
SANS 164:1 (2006)

BRAZILIAN STANDARD - 10A
Unshuttered socket
ABNT NBR 14136:2002

INDIAN STANDARD - 6/16A
Shuttered socket
IS 1293:1988

APPLICATION EXAMPLES

WEATHER-PROOF ENCLOSURES

VERSIONS

LT enclosure
Special high resistance thermoplastic compound.

MV enclosure
Metal 15/10 painted with an epoxy resin suitable for inside use.

AI enclosure
Stainless steel.

REFERENCE STANDARDS

EN 60670-1
Boxes and enclosures for electrical accessories for household and similar fixed electrical installations.
Part 1: general requirements.

CEI 23-49
Enclosure for accessories for household and similar fixed alectrical installations.
Part 2: particular requirements for anclosures for protection devices and accessories dissipating a considerable power in normal use.

EN 62208
Empty enclosure for low-voltage switchgear and controlgear assemblies.
Part 1: general requirements.

EN 60670-24
Boxes and enclosures for electrical accessories for household and similar fixed electrical installations.
Part 24: particular requirements for enclosures for housing protective devices and other power dissipating electrical equipment.

QUALITY MARKS

TECHNICAL CHARACTERISTICS

Protection degree:	**IP65**
Operating ambient temperature according to the reference standard:	**-25°C +35°C**
Max. operating ambient temperature:	**60°C**
Glow Wire test:	**650°C**
Material:	**Engineering plastic/Metal**
IK degree at 20°C:	**IK08 (door with window)** **IK10 (plain door)**
Cable inlets:	**Blank sides (Engineering plastic)** **Plate (Metal)**
Insulation class:	**Class II (double insulation)** ⧈
Colour:	**Grey RAL 7035**

BEHAVIOUR WITH CHEMICAL AND ATMOSPHERIC AGENTS

Saline solution	Acids		Bases		Solvents				Mineral oil	UV rays
	Concentrated	Diluted	Concentrated	Diluted	Hexane	Benzol	Acetone	Alcohol		
Resistant	Limited Resistance	Resistant	Limited Resistance	Resistant	Resistant	Not Resistant	Not Resistant	Resistant	Not Resistant	Resistant

TYPES

	Dimensions (mm)	rows of	max
Type 1	320x370x210	12 DIN	24 DIN
Type 2	460x370x245	20 DIN	40 DIN
Type 3	460x520x245	20 DIN	60 DIN
Type 4	460x670x245	20 DIN	80 DIN
Type 5	775x715x345	35 DIN	140 DIN

There are 5 cabinets available in the EASYBOX Series, each with three different variations (LT, MV and AI):

DISSIPABLE POWER

Cabinet	DIN Modules	Set-up with chassis and DIN rail (W)				Set-up with base plate in L3 position (W)	
		LT	MV	AI	LT	MV	AI
Type 1	24 DIN	35	45	30	40	65	40
Type 2	40 DIN	50	60	42	84	105	62
Type 3	60 DIN	58	73	47	100	125	78
Type 4	80 DIN	85	98	63	125	150	94
Type 5	140 DIN	138	155	-	235	280	-

Dissipable power according to Italian standard CEI 23-49

APPLICATION EXAMPLES

Metal enclosures: stainless steel (Al) and metal 15/10 varnished with epoxy resin (MV) take the same accessories as the (LT) cabinets.

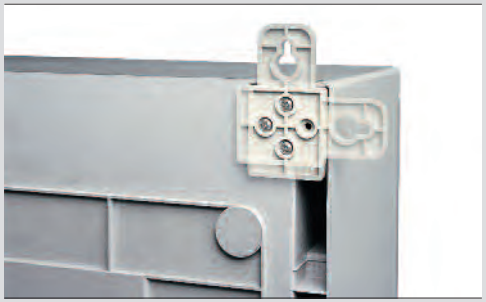

LT cabinet fixing brackets,
positioned either horizontally or vertically for MV and Al enclosures.

MODULARITY

The Easy-Box series offers a range of components that are modular and inter-changeable among the different enclosures. Enclosures with the same height or width can be placed above or beside each other, while enclosures of the same width have various components in common - DIN rails, modular plates, panels and accessories.

LT cabinet type 3: set up with 2 DIN rows and half modulex (blank panel 1/2 module).

Setting up with vertical mccb.

EMERGENCY CALL POINTS

VERSIONS

Flush mounting version IP55
with illuminated push button.

Surface mounting version IP55
with illuminated push button.

Surface mounting version IP65
with DIN Rail or mounting plate.

REFERENCE STANDARDS

EN 60947-5-1
Low-voltage switchgear and controlgear.
Part 5-1: control circuit devices and switching elements. Electromechanical control circuit devices.

EN 60670-1
Boxes and enclosures for electrical accessories for household and similar fixed electrical installations.
Part 1: general requirements.

TECHNICAL CHARACTERISTICS

Protection degree:	**IP55-IP65**
Operating ambient temperature according to the reference standard:	**-25°C +35°C**
Max. operating ambient temperature:	**60°C**
Glow wire test:	**650°C**
Material:	**Engineering plastic and glass**
Insulation class:	**Class II (double insulation)** ⧈
Halogen free:	**Yes**
Colour:	**Red RAL 3000**

TECHNICAL CHARACTERISTICS FOR EMERGENCY SWITCHING DEVICES

Rated voltage U_E:	**250V**
Category of use:	**AC12**
Rated current I_E:	**2A**
Rated insulation voltage Ui:	**250V**

BEHAVIOUR WITH CHEMICAL AND ATMOSPHERIC AGENTS

Saline solution	Acids		Bases		Solvents				Mineral oil	UV rays
	Concentrated	Diluted	Concentrated	Diluted	Hexane	Benzol	Acetone	Alcohol		
Resistant	Resistant	Resistant	Resistant	Resistant	Resistant	Not resistant	Not resistant	Resistant	Resistant	Resistant

APPLICATION EXAMPLES

DISTRIBUTION ASSEMBLIES

REFERENCE STANDARDS

EN 60670-1
Boxes and enclosures for electrical accessories for household and similar fixed electrical installations.
Part 1: general requirements.

EN 60670-24
Boxes and enclosures for electrical accessories for household and similar fixed electrical installations.
Part 24: particular requirements for enclosures for housing protective devices and other power dissipating electrical equipment.

BEHAVIOUR WITH CHEMICAL AND ATMOSPHERIC AGENTS

Saline solution	Acids		Bases		Solvents				Mineral oil	UV rays
	Concentrated	Diluted	Concentrated	Diluted	Hexane	Benzol	Acetone	Alcohol		
Resistant	Limited Resistance	Resistant	Limited Resistance	Resistant	Resistant	Not Resistant	Not Resistant	Resistant	Not Resistant	Limited Resistance

VERSIONS

6 DIN

11 DIN

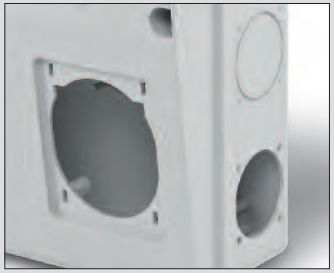

Left and right side knockouts for DOMO Series (flange 50x60mm).

TECHNICAL CHARACTERISTICS

Rated current:	**IP55**
Operating ambient temperature according to the reference standard:	**-25°C +35°C**
Max. operating ambient temperature:	**60°C**
Glow Wire test:	**650°C**
Material:	**Engineering plastic**
IK degree at 20°C:	**IK08**
Cable inlet:	**PG16-PG21-PG29**
Insulation class:	**Class II (double insulation)** ⧈
Dissipable power according to CEI 23-49 standard:	**9-15W**
Colour:	**Grey RAL7035**

APPLICATION EXAMPLES

INDUSTRIAL PLUGS AND SOCKETS

VERSIONS

Plugs and connectors
90° angled

Panel mounting socket outlets
90° angled outlet

Panel mounting socket outlets
Straight (reduced flange)

REFERENCE STANDARDS

EN 60309-1
Plugs, socket outlets and couples for industrial purposes.
Part 1: general tequirements.

EN 60309-2
Plugs, socket outlets and couples for industrial purposes.
Part 2: dimensional interchangeability requirements for pin and contact-tube accessories of harmonised configurations.

QUALITY MARKS

TECHNICAL CHARACTERISTICS

Rated current:	**16A-32A**
Rated voltage:	**100÷690V~**
Frequency:	**c.c. - 50÷500Hz**
Insulating voltage:	**500/690V~**
Protection degree:	**IP44/IP54-IP66/IP67**
Operating ambient temperature according to the reference standard:	**-25°C +40°C**
Max. operating ambient temperature:	**60°C**
Glow Wire test:	**650°C/850°C**
Material:	**Engineering plastic**
IK degree at 20°C:	**IK07 (plugs and connectors 90° angled)** **IK09 (panel mounting socket outlets 90° angled outlet)**
Cable inlets:	**Cable sleeve IP44/IP54** **Cable gland IP66/IP67**

NO. OF CYCLES

Rated current (A)	Under load	Without load
16A	5.000	-
32A	1.000	1.000

BEHAVIOUR WITH CHEMICAL AND ATMOSPHERIC AGENTS

Saline solution	Acids		Bases		Solvents				Mineral oil	UV rays
	Concentrated	Diluted	Concentrated	Diluted	Hexane	Benzol	Acetone	Alcohol		
Resistant	Limited Resistance	Resistant	Limited Resistance	Resistant	Not Resistant	Not Resistant	Not Resistant	Limited Resistance	Limited Resistance	Resistant

WIRING AND INSTALLATION

Wiring capacity of the terminals
Cross-section of connectable conductors (mm²)

Rated voltage	Rated current (A)	Plugs, connectors and appliance inlets		Socket outlets	
		Min	Max	Min	Max
>50V	16A	1,5	2,5	1,5	4
	32A	2,5	6	2,5	10

Max. cable size accepted by the cable clamp

Rated current (A)	Outside Ø mm	
	Min	Max
16A	8	15
32A	11,5	21

APPLICATION EXAMPLES

PIN AND SLEEVE DEVICES

VERSIONS

Plugs and connectors

Appliance inlets

Receptacle

Accessories Back Box and closure caps

Liquid tight adapter

REFERENCE STANDARDS

IEC 60309-1
Plugs, socket-outlets and couplers for industrial purposes.
Part 1: general requirements.

IEC 60309-2
Plugs, socket-outlets and couplers for industrial purposes.
Part 2: dimensional interchangeability requirements for pin and contact-tube accessories.

UL 1682
Plugs, receptacles and cable connectors of the pin and sleeve type.

UL 1686
Standard for pin and sleeve configuration.

QUALITY MARKS

UL LISTED:
E238171, E238172

UL CLASSIFIED:
E238170

BEHAVIOUR WITH CHEMICAL AND ATMOSPHERIC AGENTS

Saline solution	Acids		Bases		Solvents				Mineral oil	UV rays
	Concentrated	Diluted	Concentrated	Diluted	Hexane	Benzol	Acetone	Alcohol		
Resistant	Limited Resistance	Resistant	Limited Resistance	Resistant	Not Resistant	Not Resistant	Not Resistant	Limited Resistance	Resistant	Resistant

WIRING AND INSTALLATION

Cross-section of connectable conductors (awg/mm²)

Rated current		Plugs, connectors and appliance inlets				Receptacle			
		Min		Max		Min		Max	
Series I	Series II	awg	mm²	awg	mm²	awg	mm²	awg	mm²
16A	20A	16	1	12	2,5	16	1,5	12	4
32A	30A	14	2,5	10	6	14	2,5	8	10
63A	60A	10	6	6	16	10	6	4	25
125A	100A	6	16	2	50	4	25	0	70

Cord grip range (Plugs and connectors)

Rated current		Outside Ø mm			
		Min		Max	
Series I	Series II	awg	mm²	awg	mm²
16A	20A	,570	14	,710	18
32A	30A	,675	17	,910	23
63A	60A	,937	24	1,375	35
125A	100A	1,265	32	1,790	45

TECHNICAL CHARACTERISTICS FOR BACK BOX

Protection degree (IEC 60529):	**IP66/IP67**
Operating ambient temperature:	**-25°C +40°C**
Max. operating ambient temperature:	**+70°C**
Self-extinguishing (IEC 60695-2-I):	**GW test 850°C**
Self-extinguishing (UL94):	**5VA (3mm)**
Material:	**PC siloxane**
IK degree at 20°C (EN 50102):	**IK10 (20J)**

TECHNICAL CHARACTERISTICS FOR PIN & SLEEVE

Rated current:	**16A - 32A - 63A - 125A (SERIES I)** **20A - 30A - 60A - 100A (SERIES II)**
Rated voltage:	**100÷690V~**
Frequency:	**D.C. - 50÷500Hz**
Insulating voltage:	**500/690V~**
Protection degree (IEC 60529):	**IP44 - IP67**
Operating ambient temperature according to the reference standard:	**-25°C + 40°C**
Max. operating ambient temperature:	**+70°C**
Self-extinguishing (IEC 60695-2-I):	**GW test 650°C / 850°C**
Self-extinguishing (UL94):	**V1 (3mm)**
Material:	**VALOX®**
IK degree at 20°C (EN 50102):	**IK10 (20J)**

EUREKA[PIN&SLEEVE] Series

PERFORMANCE - ELECTRICAL (SERIES I)

Dielectric Voltage withstand:	**3000 Volts for 1 minute per IEC 60309-1, Clause 19**
Maximum Working Voltage:	**690VAC/250 VDC (minimum creepage and clearances per IEC)**
Current Interrupting/ Load Breaking:	**Tested to 125% rated current at 110% rated voltage per IEC309-1 clause 20**
Temperature Rise:	**Maximum 50°C rise at rated current per IEC309-1 Clause 22, Table 8**
Endurance with Load per IEC 60309-1 Clause 21:	**16 Amp: 5000 cycles; Load only 32 Amp: 1000 cycles - Alternating load 63 Amp: 1000 cycles - Alternating load 125 Amp: 250 cycles - Alternating load**

PERFORMANCE - MECHANICAL (SERIES I)

Cold (-25°C) Impact Resistance:	**Per IEC 60309-1 Clause 24; (-25°C) with 75cm drop**
Cable O.D. Accommodation:	**Round portable service cords from 14.5mm O.D. through 50mm O.D.**
Terminal Identification:	**In accordance with IEC 60309-1 standards; as L1-L2-L3-N-G**
Cable Pull-Out Force:	**In accordance with IEC 60309-1, Clause 23**

PERFORMANCE - ELECTRICAL (SERIES II)

Dielectric Voltage Withstand:	**3000 Volts for 1 minute (fixed devices) 2200 Volts for 1 minute (portable devices)**
Maximum Working Voltage:	**600VAC/250 VDC (minimum creepage and clearances per UL 840)**
Current Interrupting/ Load Breaking:	**Tested to 150% of full rated current for circuit interrupting**
Temperature Rise:	**Maximum 30°C rise at full rated current after 50 cycles overload at 150% rated load at 0.75-pf**
Horsepower Ratings:	**Per Nec 430-151b reference for non-interrupting ratings**
Endurance with Load per IEC 60309-1 Clause 21:	**20 Amp: 5000 cycles; Load only 30 Amp: 1000 cycles - Alternating load 60 Amp: 1000 cycles - Alternating load 100 Amp: 250 cycles - Alternating load**

PERFORMANCE - MECHANICAL (SERIES II)

Cold (-25°C) Impact Resistance:	**Per UL 1682 Section 34 and IEC 60309-1 Clause 24**
Cable O.D. Accommodation:	**Round portable service cord from 0.57" O.D. through 1.79" O.D.**
Terminal Identification:	**In accordance with UL 1682 standards and IEC 60390-1: as L1-L2-L3-N-G**
Cable Pull-Out Force:	**Per UL 1682 Section 33 and IEC 60309-1 Clause 23**

PERFORMANCE - ENVIRONMENTAL (SERIES I & II)

Corrosion Resistance:	**All metallic components stainless steel or nickel plated brass Sleeve pressure rings of zinc plated steel**

MATERIALS FOR PIN & SLEEVE (SERIES I & II)

Housing:	**Valox®**
Contact Carriers:	**Valox®**
Cable Gland Nut:	**Valox®**
Cable Bushing:	**Solid neoprene, onion ring type**
O-Ring, Seals & Gaskets:	**Solid neoprene**
Pins:	**Nickel plated brass**
Sleeve Force Ring:	**Zinc plated steel**
Terminal Screws:	**Nickel plated steel**
Flap/Screw Cover Springs:	**Stainless steel**
SNAP-ON Spring:	**Stainless steel**
Mounting Flanges:	**Valox®**

MATERIALS FOR BACK BOX (SERIES I & II)

Housing:	**PC siloxane**
Gasket:	**Solid neoprene**
Screws:	**Stainless steel**
Grounding plate:	**zinc-coated steel**

Standard Interface / World Ready
Full International Compliances
EN 60309
UL Classification to IEC 60309-1 and IEC 60309-2.
cULus Listing: UL 1682/1686 and CSA C22.2 No. 182.1.
CE conforms to EC Low Voltage Directive.

North American and Global Voltage
Polarization "clock positions" available in all standard ratings.

Solid, Safe Voltage Selections
One-Piece contact carriers with Full-Color IEC standard voltage-phasing Coding ensures correct product application every time.

Industrial Pin&Sleeve for North American configurations (Series II)

COLOUR CODE CLOCK POSITION

The operating voltage is identified by conventional colours as shown in the table:

RATED VOLTAGE	COLOUR
110-130V	
208-250V	
380-480V	
500-690V	
277V	
125/250V	

CONNECTOR AND RECEPTACLE (FRONT VIEW)

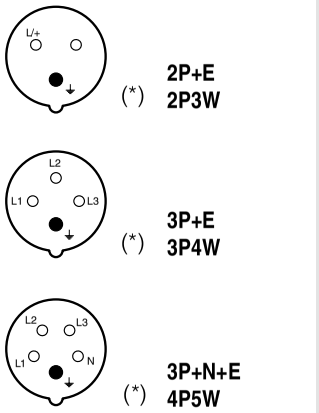

(*) Major keyway

CLOCK FACE POSITION

North American ratings viewing connector and receptacle from the front, clock hour position (h) is established by the position of the earth contact respect the major keyway which is always situated at 6h clock position.

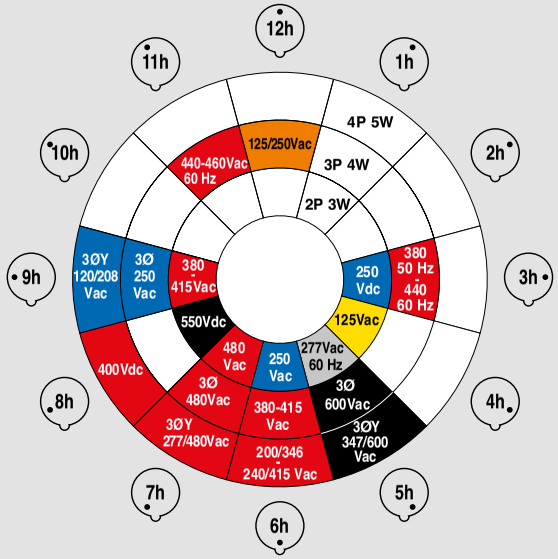

CATALOGUE NUMBERING SYSTEM

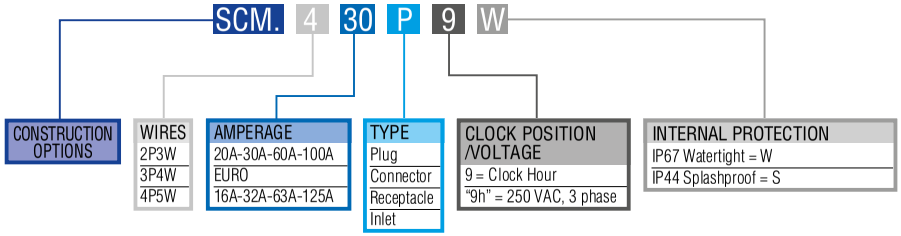

WATERTIGHT - IP67

IP67

Watertight design and construction meet stringent IP67 internal protection standards.
Rugged thermoplastic housings resist impact or abuse and provide excellent corrosion resistance.
Unique Scame strain relief grip and sealing system assure superior cable retention and watertight conductor termination.
Ideal for outdoor, wet marine and washdown applications.
Unique 75% faster assembly with Snap-on handle locking, and cable grip system.

SPLASHPROOF - IP44

IP44

Suitable for indoor use where splashing liquids and other contaminants may interfere with electrical connections.
Ideal for most heavy commercial applications and light industrial applications.
Available 16A, 20A, 30A and 32A Amp ratings.

No Tools, No Screws Necessary
Snap-on locking handle saves 75% on assembly time.
Unique Snap-on assembly feature on 16A, 20A, 30A and 32A Amp plugs and connectors makes installation and inspection fast and reliable.
Captive gaskets in handles seal out water, chemicals and dust.

Easy Action Single-Wiring Point Access Saves Time Wiring
All terminal screws face in same direction allowing installer to make safe and secure conductor terminations in 30% less time than other devices. Rugged, corrosion free thermoplastic housings are colour-coded for safe reliable connections to all other mating type /polarizations, with raised earth terminal standard.

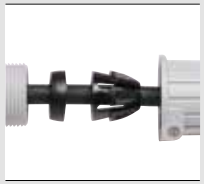

Simple Cable Clamping
Threaded cable gland on 16/32A and 20/30A devices makes assembly fast and easy.
One-piece lock screw verifies clamp locking hold, with no external metal contact possible (16/32A and 20/30A devices).

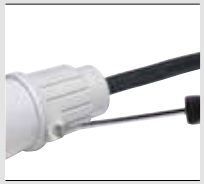

Unique and Quick
One-piece cable gland with locking screw loads to cable followed by cable grip 6-Finger cable clamp/grip piece.
Watertight onion ring bushing fits a wide variety of outside diameters.

Watertight and cable Grip Safety
Grip cable flexible 6-Finger clamp teeth holds well beyond all agency test pullout forces.
No internal clamps required.
Available in all amperages.

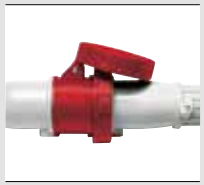

The Performance Connection
Watertight spring-loaded covers with high-strength flex-hinge screw covers on IP67 devices.
Flap covers on IP44 splashproof styles.
Safety, performance and durability for all EN 60309 applications worldwide.

WATERTIGHT - IP67

PLUG

CONNECTOR

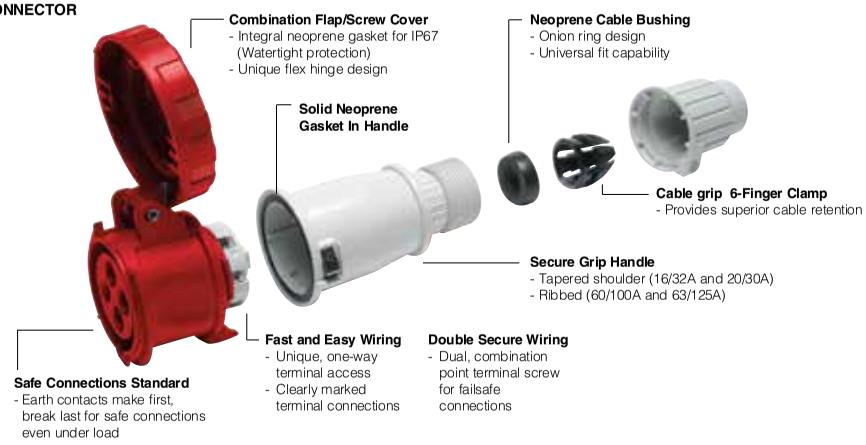

LIQUID TIGHT ADAPTER

BACK BOX

CONTROL DEVICE

VERSIONS

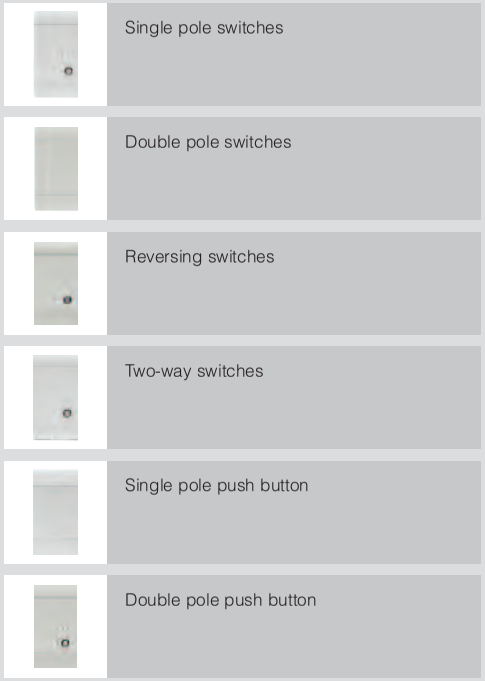

- Single pole switches
- Double pole switches
- Reversing switches
- Two-way switches
- Single pole push button
- Double pole push button

REFERENCE STANDARDS

EN 60669-1
Switches for household and similar fixed-electical installations.
Part 1: general requirements.

QUALITY MARKS

TECHNICAL CHARACTERISTICS

Rated current:	**2A-10A-16A-16AX-20AX**
Rated voltage:	**250V~**
Frequency:	**50Hz**
Insulating voltage:	**250V~**
Protection degree:	**IP20D**
Operating ambient temperature according to the reference standard:	**-15°C +35°C**
Max operating ambient temperature:	**60°C**
Glow Wire test:	**650°C/750°C**
Material:	**Engineering plastic**
Cabling capacity of the terminals:	**2A: 0,5mm²÷1mm²** **10A: 1mm²÷2,5mm²** **16A: 1mm²÷4mm²** **20A: 1mm²÷6mm²**
Glow Wire test:	**650°C/850°C**
Halogen free:	**Yes**
Material:	**Engineering plastic**
Colour:	**Grey RAL 7035**

BEHAVIOUR WITH CHEMICAL AND ATMOSPHERIC AGENTS

Saline solution	Acids		Bases		Solvents				Mineral oil	UV rays
	Concentrated	Diluted	Concentrated	Diluted	Hexane	Benzol	Acetone	Alcohol		
Resistant	Limited Resistance	Not Resistant	Limited Resistance	Limited Resistance	Not Resistant	Not Resistant	Not Resistant	Limited Resistance	Limited Resistance	Resistant

APPLICATION EXAMPLES

DOMESTIC SOCKET-OUTLETS

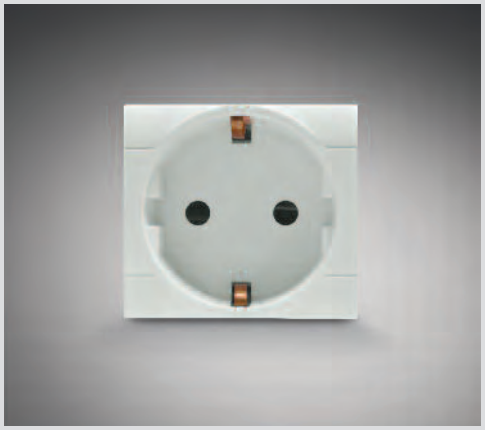

VERSIONS

Socket-outlet - European Standard

Socket-outlet - International Standard

REFERENCE STANDARDS

CEI 23-50
Plugs and sockets for domestic and similar applications.
Part 1: general requirements.

IEC 60884-1
Plugs and socket-outlets for household and similar purposes.
Part 1: general requirements.

QUALITY MARKS

TECHNICAL CHARACTERISTICS

Rated current:	**10A-13A-15A-16A-20A**
Rated voltage:	**250V~**
Frequency:	**50Hz**
Insulating voltage:	**250V~**
Protection degree:	**IP20D**
Operating ambient temperature according to the reference standard:	**-155°C +35°C**
Max. operating ambient temperature:	**60°C**
Glow Wire test:	**650°C/750°C**
Material:	**Engineering plastic**
Cabling capacity of the terminal:	**10A: 1mm²÷2,5mm²** **13A: 1,5mm²÷4mm²** **15A: 1,5mm²÷4mm²** **16A: 1mm²÷4mm²** **20A: 1mm²÷6mm²**
Glow Wire test:	**650°C/850°C**
Halogen free:	**Yes**
Colour:	**Grey RAL 7035** **Red**

BEHAVIOUR WITH CHEMICAL AND ATMOSPHERIC AGENTS

Saline solution	Acids		Bases		Solvents				Mineral oil	UV rays
	Concentrated	Diluted	Concentrated	Diluted	Hexane	Benzol	Acetone	Alcohol		
Resistant	Limited Resistance	Not Resistant	Limited Resistance	Limited Resistance	Not Resistant	Not Resistant	Not Resistant	Limited Resistance	Limited Resistance	Resistant

AVAILABLE STANDARDS

ITALIAN STANDARD P10 - 10A
Shuttered socket
CEI 23-50

ITALIAN STANDARD P11 - 16A
Shuttered socket
CEI 23-50

ITALIAN STANDARD P17/11 - 16A
Shuttered socket
Bivalente CEI 23-50

ITALIAN STANDARD P30 - 16A
Shuttered socket
CEI 23-50

PLURISTANDARD P40 - 16A
Shuttered socket
CEI 23-50

GERMAN STANDARD - 16A
Shuttered socket
DIN VDE 0620

FRENCH STANDARD - 16A
Shuttered socket
NFC 61-314

BRITISH STANDARD - 13A
Shuttered socket
BS 1363-2

BRITISH STANDARD - 15A
Shuttered socket
BS 546

ARGENTINIAN STANDARD - 10A
Unshuttered
IRAM 2071

ARGENTINIAN STANDARD - 20A
Unshuttered
IRAM 2071

EURO-AMERICAN STANDARD - 15A
Shuttered socket

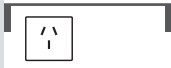

NEW ZEALAND STANDARD - 10A
Unshuttered socket
AS/N25 3112

SOUTH AFRICAN STANDARD - 16A
Shuttered socket
SANS 164:1 (2006)

BRAZILIAN STANDARD - 10A
Unshuttered socket
ABNT NBR 14136:2002

INDIAN STANDARD - 6/16A
Shuttered socket
IS 1293:1988

APPLICATION EXAMPLES

TV/SAT OUTLETS (Ø 9,5mm)

VERSIONS

TV outlets Male
- Direct
- Terminal
- Attenuation 12 dB

Coax/sat/cat. F outlets
- Direct

TV/SAT outlets

REFERENCE STANDARDS

CEI EN 50083
Communal aerial installations.

IEC 60169
Radio-frequency connectors.

QUALITY MARKS

TECHNICAL CHARACTERISTICS

Frequency:	**TV: 5-862 Mhz SAT: 950-2400 Mhz**
Protection degree:	**IP20D**
Operating ambient temperature according to the reference standard:	**-15°C +35°C**
Max. operating ambient temperature:	**60°C**
Material:	**Engineering plastic**
Halogen free:	**Yes**
Colour:	**Grey RAL 7035**

BEHAVIOUR WITH CHEMICAL AND ATMOSPHERIC AGENTS

Saline solution	Acids		Bases		Solvents				Mineral oil	UV rays
	Concentrated	Diluted	Concentrated	Diluted	Hexane	Benzol	Acetone	Alcohol		
Resistant	Limited Resistance	Not Resistant	Limited Resistance	Limited Resistance	Not Resistant	Not Resistant	Not Resistant	Limited Resistance	Limited Resistance	Resistant

Direct	Terminal	Attenuation 12dB
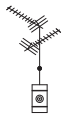	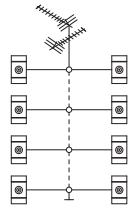	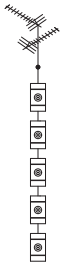

APPLICATION EXAMPLES

CONDUIT FIXING ACCESSORIES

TECHNICAL CHARACTERISTICS
(Engineering plastic versions)

For tube Ø (mm):	**16 - 20 - 25 - 32 - 40 - 50**
Operating ambient temperature:	**-15°C +60°C**
Max. operating ambient temperature:	**60°C**
Halogen free:	**Yes**
Material:	**Engineering plastic**
Colour:	**Grey RAL 7035**

ENGINEERING PLASTIC VERSIONS

	Snap clip
	Snap clip with plug and screw
	Collar clip
	Collar clip
	Pressure clip

METAL VERSIONS

	Spacer bracket with M6 threaded base
	Half-saddle standard type
	Half-saddle heavy duty type
	Saddle

BEHAVIOUR WITH CHEMICAL AND ATMOSPHERIC AGENTS (ENGINEERING PLASTIC VERSIONS)

Saline solution	Acids		Bases		Solvents				Mineral oil	UV rays
	Concentrated	Diluted	Concentrated	Diluted	Hexane	Benzol	Acetone	Alcohol		
Resistant	Limited Resistance	Resistant	Resistant	Resistant	Not Resistant	Not Resistant	Not Resistant	Limited Resistance	Resistant	Resistant

ACCESSORIES FOR RIGID CONDUITS

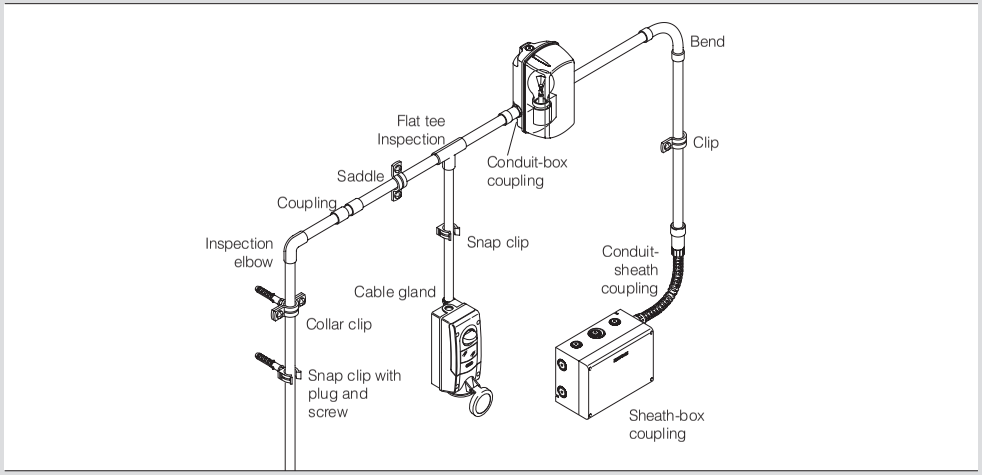

APPLICATION EXAMPLES

FLUSH MOUNTING CONSUMER UNITS

REFERENCE STANDARDS

EN 60670-1
Boxes and enclosures for electrical accessories for household and similar fixed electrical installations.
Part 1: General requirements.

EN 60670-24
Boxes and enclosures for electrical accessories for household and similar fixed electrical installations.
Part 24. Particular requirements for enclosures for housing protective devices and other power dissipating electrical equipment.

BEHAVIOUR WITH CHEMICAL AND ATMOSPHERIC AGENTS

Saline solution	Acids		Bases		Solvents				Mineral oil	UV rays
	Concentrated	Diluted	Concentrated	Diluted	Hexane	Benzol	Acetone	Alcohol		
Resistant	Limited Resistance	Resistant	Limited Resistance	Resistant	Limited Resistance	Limited Resistance	Limited Resistance	Resistant	Resistant	Resistant

VERSIONS

Flush and hollow mounting

TECHNICAL CHARACTERISTICS

Rated voltage:	**400V~**
Protection degree:	**IP40**
Operating ambient temperature according to the reference standard:	**-15°C +60°C**
Max. operating ambient temperature:	**+60°C**
Glow wire test:	**650°C (enclosure)** **850°C (enclosure)** **960°C (terminal boards)**
Material:	**Engineering plastic (enclosure and terminal boards)** **Painted steel (door)**
Insulation class:	**Class II (double insulation)** ⧈
Halogen free:	**Yes**
Power dissipation:	**25W (12 mod.) - 40W (24 mod.)** **55W (36 mod.) - 75W (48 mod.)**
Colour:	**White**
Terminal blocks:	**Yes**

APPLICATION EXAMPLES

ACCESSORIES

Accessories for flush mounting included.

Accessories for hollow mounting.

Terminal blocks (2x16mm² + 14x10mm²) included.

DISTRIBUTION ASSEMBLIES

VERSIONS

Distribution assemblies
- Portable with cable and plug

Two-front units distribution assemblies
- 3+3 socket outlets
- 4+4 socket outlets

REFERENCE STANDARDS

EN 60670-1
Boxes and enclosures for electrical accessories for household and similar fixed alectrical installation.
Part 1: general requirements.

EN 61439-3
Low-voltage switchgear and controlgear assemblies.
Part 3: distribution boards intended to be operated by ordinary persons (DBO).

EN 61439-4
Low-voltage switchgear and controlgear assemblies.
Part 4: particular requirements for assemblies for construction sites (ACS)

TECHNICAL CHARACTERISTICS

Protection degree:	**IP44**
Operating ambient temperature according to the reference standard:	**-25°C +40°C**
Max operating ambient temperature:	**60°C**
Glow Wire test:	**960°C**
IK degree at 20°C:	**IK09 (distribution assemblies) IK10 (empty units)**
Terminal blocks fixing possibility:	**Yes**
DIN rail fixing:	**Yes**
Power output:	**max. 18KW**
Material:	**Rubber**
Colour:	**Black**

BEHAVIOUR WITH CHEMICAL AND ATMOSPHERIC AGENTS (DISTRIBUTION ASSEMBLIES)

Saline solution	Acids		Bases		Solvents				Mineral oil	UV rays
	Concentrated	Diluted	Concentrated	Diluted	Hexane	Benzol	Acetone	Alcohol		
Resistant	Limited Resistance	Resistant	Limited Resistance	Resistant	Not Resistant	Not Resistant	Not Resistant	Limited Resistance	Resistant	Resistant

BEHAVIOUR WITH CHEMICAL AND ATMOSPHERIC AGENTS (EMPTY UNITS)

Saline solution	Acids		Bases		Solvents				Mineral oil	UV rays
	Concentrated	Diluted	Concentrated	Diluted	Hexane	Benzol	Acetone	Alcohol		
Resistant	Resistant	Resistant	Resistant	Resistant	Resistant	Resistant	Resistant	Resistant	Resistant	Resistant

APPLICATION EXAMPLES

LIGHT FITTINGS

VERSIONS

HALE Series - IP20
- Standard version
- Heavy duty version

HALE Series - IP65

REFERENCE STANDARDS

EN 60598-1
Luminaires.
Part 1: general requirements and tests.

EN 60598-2-8
Luminaires.
Part 2: particular requirements.

QUALITY MARKS

TECHNICAL CHARACTERISTICS

Protection degree:	**IP20-IP65**
Operating ambient temperature according to the reference standard:	**-5°C +35°C**
Rated wattage:	**60W**
Glow Wire test:	**650°C**
IK degree at 20°C:	**IK08 (IP65 version)** **IK09 (IP20 version)**
Cable inlet:	**8-13mm** **(version without cable)**
Insulation class:	**Class II (double insulation)** ⧈
Lampholder type:	**E27**
Material:	**Engineering plastic**

BEHAVIOUR WITH CHEMICAL AND ATMOSPHERIC AGENTS

Saline solution	Acids		Bases		Solvents				Mineral oil	UV rays
	Concentrated	Diluted	Concentrated	Diluted	Hexane	Benzol	Acetone	Alcohol		
Resistant	Limited Resistance	Resistant	Limited Resistance	Limited Resistance	Limited Resistance	Not Resistant	Not Resistant	Resistant	Limited Resistance	Resistant

INSTALLATION

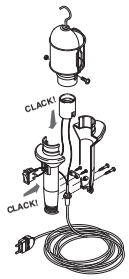

HALE Series - IP20

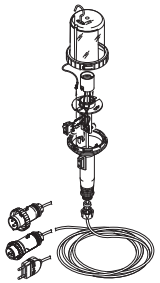

HALE Series - IP65

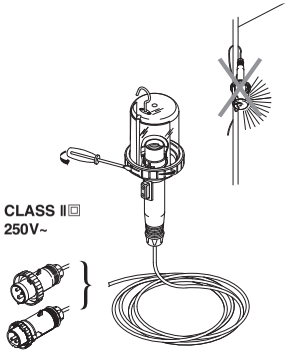

APPLICATION EXAMPLES

LIGHT FITTINGS

VERSIONS

Bulkhead light oval

Bulkhead light round

Bulkhead light square

REFERENCE STANDARDS

EN 60598-1
Luminaires.
Part 1: general requirements and tests.

EN 60598-2-1
Luminaires.
Part 2: particular requirements.
Section 1: fixed general purpose luminaires.

QUALITY MARKS

TECHNICAL CHARACTERISTICS

Protection degree:	**IP44 - IP65**
Operating ambient temperature according to the reference standard:	**-25°C +35°C**
Rated wattage:	**Max. 100W**
Glow Wire test:	**850°C**
Grado IK a 20°C:	**IK08 - IK10**
Cable inlet:	**PG9 - PG13,5**
DInsulation class:	**Class II (double insulation)**
Lampholder type:	**E27 - B22**
Installation on inflammable surface:	**Yes**
Material:	**Engineering plastic**

BEHAVIOUR WITH CHEMICAL AND ATMOSPHERIC AGENTS

Saline solution	Acids		Bases		Solvents				Mineral oil	UV rays
	Concentrated	Diluted	Concentrated	Diluted	Hexane	Benzol	Acetone	Alcohol		
Resistant	Limited Resistance	Resistant	Limited Resistance	Limited Resistance	Limited Resistance	Not Resistant	Not Resistant	Resistant	Limited Resistance	Resistant

POLE DIAGRAM

E27
- Incandescent bulb: 100W E27
- Total flux: 1350 lm

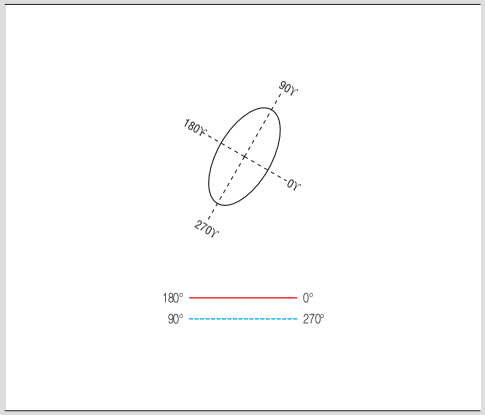

OVAL

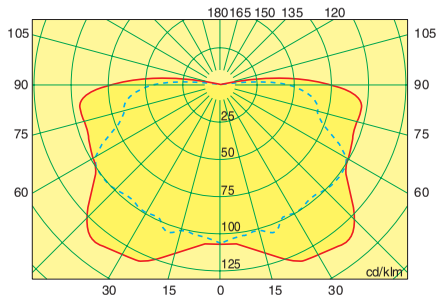

EFFICIENCY: 65.97%

SQUARE

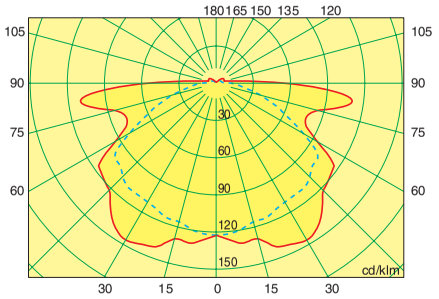

EFFICIENCY: 66.17%

ROUND

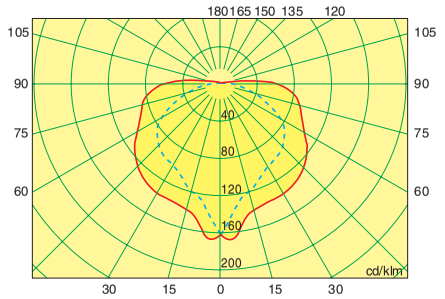

EFFICIENCY: 63.97%

Co-ordinates system: c-gamma

ALUMINIUM ENCLOSURE - 16A-160A

REFERENCE STANDARDS

EN 60947-3
Low voltage switchgear and controlgear.
Part 3: switches, disconnectors, switch-disconnectors and fuse-combination unit.

EN 60529
Degrees of protection provided by enclosure.

VERSIONS

Surface mounting

TECHNICAL CHARACTERISTICS

Polarity:	**2P-3P-3P+N-4P-6P-8P**
Rated current:	**16A*-20A-25A*-32A-40A-63A 80A-100A-125A-160A**
Protection degree:	**IP65**
Operating ambient temperature according to the reference standard:	**-5°C +40°C**
Min-Max. operating ambient temperature:	**-25°C +60°C**
Material:	**Die-cast alluminium**
IK degree:	**IK10**
Colour:	**Grey RAL7015**

3P+N with late break early make neutral pole.
Equipped with door locking.
Padlockable handle.
* Only for 6 and 8 poles.

BEHAVIOUR WITH CHEMICAL AND ATMOSPHERIC AGENTS

Saline solution	Acids		Bases		Solvents				Mineral oil	Rayons UV
	Concentrated	Diluted	Concentrated	Diluted	Hexane	Benzol	Acetone	Alcohol		
Resistant	Limited Resistance	Resistant	Limited Resistance	Limited Resistance	Resistant	Limited Resistance	Limited Resistance	Resistant	Resistant	Resistant

CABLE INLETS

Aluminium enclosure 2, 3, 4 poles

Size	Rated current (A)	Nr of poles	Enclosure dimensions	Cable entries		
1	20-32-40	2-3-4	150x105x82	Top	1xM20+1xM25	Threaded entries
				Bottom	1xM20+1xM25	Threaded entries
				Rear	-	Blank side (°)
2	63-80-100	2-3-4	210x155x107	Top	2xM32	Threaded entries
				Bottom	2xM32	Threaded entries
				Rear	-	Blank side (°)
3	125	3-4	315x264x122	Top	-	Blank side (°)
				Bottom	-	Blank side (°)
				Rear	-	Blank side (°)
4	160	3-4	410x315x128	Top	-	Blank side (°)
				Bottom	-	Blank side (°)
				Rear	-	Blank side (°)

(°) Perforated or threaded entries on request.

CABLE INLETS

Aluminium enclosure 6 and 8 poles

Size	Rated current (A)	Nr of poles	Enclosure dimensions	Cable entries		
2	16-25-32-40	6-8	210x155x107	Top	2xM32	Threaded entries
				Bottom	2xM32	Threaded entries
				Rear	-	Blank side (°)
3	63-80-100	6-8	315x264x122	Top	-	Blank side (°)
				Bottom	-	Blank side (°)
				Rear	-	Blank side (°)
4	125-160	6-8	410x315x128	Top	-	Blank side (°)
				Bottom	-	Blank side (°)
				Rear	-	Blank side (°)

(°) Perforated or threaded entries on request.

APPLICATION EXAMPLES

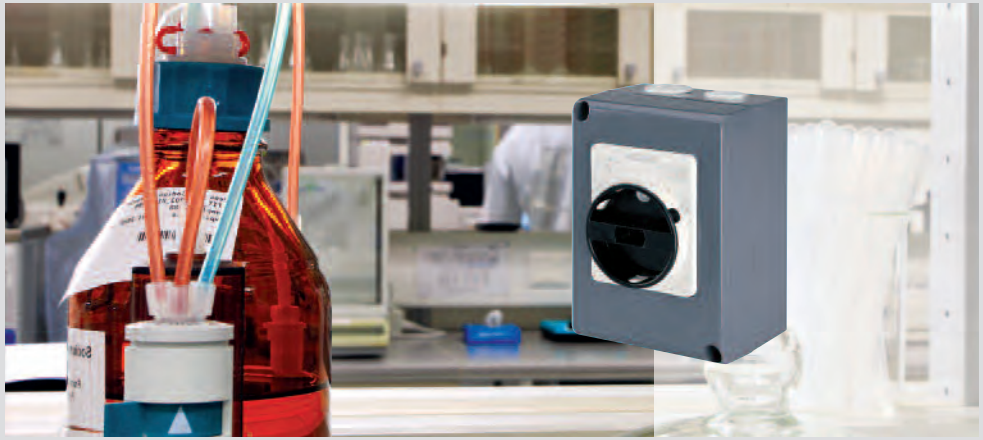

TECHNICAL DATA SWITCH DISCONNECTORS 2P, 3P, 3P+N, 4P

				20A	32A	40A	63A	80A	100A	125A	160A
Rated insulation voltage	**Ui**		VAC	690	690	690	690	690	800	800	800
Rated impulse withstand voltage	**Uimp**		kV	4	4	4	4	4	8	8	8
Thermal current	**Ith/Ithe**		A	30	40	40	63	86	100	125	160
Rated operational current – Ie	**AC21A** Resistive loads, including moderate overloads	415V	A	20	32	40	63	80	100	125	160
		500V	A	20	32	32	63	80	100	125	160
		690V	A	20	32	32	63	80	100	125	160
	AC22A Mixed resistive and inductive loads, including moderate overloads	415V	A	20	32	40	63	80	100	125	160
		500V	A	20	32	32	63	80	100	125	160
		690V	A	20	32	32	63	80	-	125	160
	AC23A Switching of motor loads or other highly inductive loads (3 phase / 3 pole)	415V	A	20	32	35	63	67	100	125	160
		500V	A	20	25	25	40	67	-	125	125
		690V	A	20	25	25	30	38	-	100	100
	AC23A Rated operational power	415V	kW	9	15	18.5	33	37	46	55	69
	AC3 Squirrel-cage motor: starting, switching off motor during running (3 phase / 3 pole)	400V	A	-	28.5	28.5	40	55	-	-	-
		690V	A	12	20	20	25	32	-	-	-
	DC22A Mixed resistive and inductive loads, including moderate overloads	250V	A	25(*)	32(*)	32(*)	-	-	-	-	-
		600V	A	10(*)	10(*)	10(*)	-	-	-	-	-
Rated short time withstand current	**Icw** (1s)		A	400	400	400	1500	1500	1500	3000	3000
Conditional short circuit current	**Ip**		KAeff	10	10	10	10	10	30	50	50
Associate fuse size for conditional short circuit current - Type gG			A	20	32	40	63	80	100	125	125
Flexible wire			mm^2	1.5-10	1.5-10	1.5-10	10-35	10-35	10-50	10-70	10-70
Rigid wire			mm^2	1.5-16	1.5-16	1.5-16	10-35	10-35	10-50	10-70	10-70

(*) Only 4P with 2+2 poles in series.

4P SWITCH LINKING FOR DC APPLICATION

TECHNICAL DATA SWITCH DISCONNECTORS 6 AND 8 POLES

				16A	25A	32A	40A	63A	80A	100A	125A	160A
Rated insulation voltage	**Ui**		VAC	800	800	800	800	800	800	800	800	800
Rated impulse withstand voltage	**Uimp**		kV	8	8	8	8	8	8	8	8	8
Thermal current	**Ith/Ithe**		A	16	25	32	40	63	80	100	125	160
Rated operational current – Ie	**AC21A** Resistive loads, including moderate overloads	415V	A	16	25	32	40	63	80	100	125	160
		500V	A	16	25	32	40	63	160	80	125	160
		690V	A	16	25	32	40	63	160	80	125	160
	AC22A Mixed resistive and inductive loads, including moderate overloads	415V	A	16	25	32	40	63	160	80	125	160
		500V	A	16	25	32	40	63	160	80	125	160
		690V	A	16	25	32	40	40	40	40	125	160
	AC23A Switching of motor loads or other highly inductive loads (3 phase / 3 pole)	415V	A	16	25	32	40	63	80	100	125	160
		500V	A	16	25	32	40	63	63	63	125	125
		690V	A	16	25	25	25	32	32	32	100	100
	AC23A Rated operational power	415V	kW	7.5	11	15	18.5	35	37	46	55	69
Rated short time withstand current	**Icw** (1s)		A	1100	1100	1100	1100	1500	1500	1500	3000	3000
Conditional short circuit current	**Ip**		KAeff	50	50	50	50	50	50	30	50	50
Associate fuse size for conditional short circuit current - Type gG			A	16	25	32	40	63	80	100	125	125
Flexible wire			mm^2	4-25	4-25	4-25	4-25	10-50	10-50	10-50	10-70	10-70
Rigid wire			mm^2	4-25	4-25	4-25	4-25	10-50	10-50	10-50	10-70	10-70

HEAVY DUTY ENGINEERING THERMOPLASTIC INSULATED ENCLOSURE 20A-40A

REFERENCE STANDARDS

EN 60947-3
Low voltage switchgear and controlgear.
Part 3: switches, disconnectors, switch-disconnectors and fuse-combination unit.

EN 60529
Degrees of protection provided by enclosure.

VERSION

Surface mounting

OUTSTANDING HEAT AND FIRE RESISTANCE
The technopolymer used for Heavy Duty Isolators guarantees an excellent heat and fire resistance: Glow Wire 960°C according to EN 60695-2-1; 5VA according to UL94.

OUTSTANDING IMPACT RESISTANCE
This material guarantees an excellent mechanical resistance to impacts. The impact resistance of the casings is higher than 20J (IK10) according to EN50102, even under limit temperature conditions (-40°C +60°C).

RESISTANCE TO ATMOSPHERIC AGENTS
The structure and materials used also make HD ISOLATOR a product suited for the most extreme environmental conditions. The special silicon gasket and the IP65 degree guarantees an excellent seal against the entry of solid objects or liquids into the casings even after a long term installation.

TECHNICAL CHARACTERISTICS

Polarity:	**2P-3P-3P+N**
Rated current:	**20A-32A-40A**
Protection degree:	**IP66**
Operating ambient temperature according to the reference standard:	**-5°C +40°C**
Min-Max. operating ambient temperature:	**-40°C +60°C**
Material:	**High performance engineering thermoplastic**
IK degree:	**IK10**
Glow wire test:	**960°C (enclosure and switch)**
Self extinguishing UL94:	**5VA**
Colour:	**Grey RAL7004**
Insulation class:	**Class II (double insulation)** ⧈

3P+N with late break early make neutral pole.
Padlockable handle.
Equipped with door locking.

Outstanding resistance to UV radiation, exceptional reliability under environmental stress and use at both low and high ambient temperatures (-40°C +60°C).

BEHAVIOUR WITH CHEMICAL AND ATMOSPHERIC AGENTS

Saline solution	Acids		Bases		Solvents				Mineral oil	Rayons UV
	Concentrated	Diluted	Concentrated	Diluted	Hexane	Benzol	Acetone	Alcohol		
Resistant	Limited Resistance	Resistant	Resistant	Resistant	Not Resistant	Not Resistant	Not Resistant	Limited Resistance	Limited Resistance	Resistant

CABLE INLETS

Heavy duty engineering plastic insulated enclosure 2P, 3P, 3P+N

Size	Rated current (A)	Nr of poles	Enclosure dimensions	Cable entries		
1	20-32-40	2-3-4	190x115x128	Top	-	Blank side (°)
				Bottom	-	Blank side (°)
				Rear	-	Blank side (°)

(°) Perforated or threaded entries on request.

TECHNICAL DATA SWITCH-DISCONNECTORS 2P,3P,3P+N

				20A	32A	40A
Rated insulation voltage	**Ui**		VAC	690	690	690
Rated impulse withstand voltage	**Uimp**		kV	4	4	4
Thermal current	**Ith/Ithe**		A	30	40	40
Rated operational current - Ie	**AC21A** Resistive loads, including moderate overloads	415V	A	20	32	40
		500V	A	20	32	32
		690V	A	20	32	32
	AC22A Mixed resistive and inductive loads, including moderate overloads	415V	A	20	32	40
		500V	A	20	32	32
		690V	A	20	32	32
	AC23A Switching of motor loads or other highly inductive loads (3 phase / 3 pole)	415V	A	20	32	35
		500V	A	20	25	25
		690V	A	20	25	25
	AC23A Rated operational power	415V	kW	9	15	18.5
	AC3 Squirrel-cage motor: starting, switching off motor during running (3 phase / 3 pole)	400V	A	-	28.5	28.5
		690V	A	12	20	20
Rated short time withstand current	**Icw** (1s)		A	400	400	400
Conditional short circuit current	**Ip**		KAeff	10	10	10
Associate fuse size for conditional short circuit current - Type gG			A	20	32	40
Flexible wire			mm^2	1.5-10	1.5-10	1.5-10
Rigid wire			mm^2	1.5-16	1.5-16	1.5-16

This values are given for guidance and may vary according to the specifics provided by the motor manufacturer.

APPLICATION EXAMPLES

HIGH RATING HINGED SHEET STEEL ENCLOSURE - 200A-1600A

REFERENCE STANDARDS

EN 60947-3
Low voltage switchgear and controlgear.
Part 3: switches, disconnectors, switch-disconnectors and fuse-combination unit.

EN 60529
Degrees of protection provided by enclosure.

VERSIONS

Surface mounting

TECHNICAL CHARACTERISTICS

Polarity:	**3P-3P+N**
Rated current:	**160A-200A-250A-315A-400A 500A-630A-800A-1000A 1250A-1600A (*)**
Protection degree:	**IP65**
Operating ambient temperature according to the reference standard:	**-5°C +40°C**
Min-Max. operating ambient temperature:	**-25°C +60°C**
Material:	**Sheet steel**
IK degree:	**IK10**
Finishing/colour:	**Polyester powder grey RAL7032**

3P+N with late break early make neutral pole.
Padlockable handle.
Equipped with door locking.
Full current neutral pole up to 1250A.
(*) Neutral pole 1250A
Full current neutral pole available on request.

BEHAVIOUR WITH CHEMICAL AND ATMOSPHERIC AGENTS

Saline solution	Acids		Bases		Solvents				Mineral oil	Rayons UV
	Concentrated	Diluted	Concentrated	Diluted	Hexane	Benzol	Acetone	Alcohol		
Resistant	Limited Resistance	Resistant	Resistant	Resistant	Resistant	Resistant	Resistant	Resistant	Resistant	Resistant

CABLE INLETS

Hinged sheet steel enclosure
3P, 3P+N top/bottom entries

Size	Rated current (A)	Nr of poles	Enclosure dimensions	Cable entries	
1	200-250	3-3P+N	500x300x150	Top	Gland plate
				Bottom	Gland plate
2	315-400-500-630	3-3P+N	600x400x200	Top	Gland plate
				Bottom	Gland plate
3	800-1000-1250	3-3P+N	700x500x250	Top	Gland plate
				Bottom	Gland plate
4	1600	3-3P+N	1000x600x300	Top	Gland plate
				Bottom	Gland plate

Perforated or threaded entries on request.

Hinged sheet steel enclosure
3P, 3P+N bottom/bottom entries

Size	Rated current (A)	Nr of poles	Enclosure dimensions	Cable entries	
1	200-250	3-3P+N	500x300x150	Top	Gland plate
				Bottom	Gland plate
2	315-400	3-3P+N	600x400x200	Top	Gland plate
				Bottom	Gland plate
3	500	3-3P+N	700x500x250	Top	Gland plate
				Bottom	Gland plate
4	630-800	3-3P+N	800x800x300	Top	Gland plate
				Bottom	Gland plate
5	1000-1250-1600	3-3P+N	1000x1000x800	Top	Gland plate
				Bottom	Gland plate

CONNECTIONS

BOTTOM/BOTTOM ENTRIES

Equipped with an insulated bar system which allows the wiring both incoming and outgoing cables from the bottom side without cable bending.

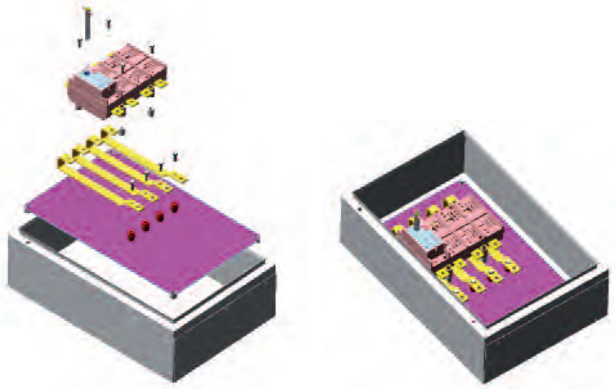

APPLICATION EXAMPLES

TECHNICAL DATA HIGH RATING SWITCH DISCONNECTORS 3P AND 3P+N

				160A	200A	250A	315A	400A	500A	630A	800A	1000A	1250A	1600A(*)
Rated insulation voltage	**Ui**		(V)	1000	1000	1000	1000	1000	1000	1000	1000	1000	1000	1000
Rated impulse withstand voltage	**Uimp**		(kV)	12	12	12	12	12	12	12	12	12	12	12
Thermal current	**Ith/Ithe**		(A)	160	200	250	315	400	500	630	800	1000	1250	1600 (*)
Rated operational current – Ie	**AC21A**	415V	(A)	160	200	250	315	400	500	630	800	1000	1250	1600
	Resistive loads, including	500V	(A)	160	200	250	315	400	500	630	800	1000	1250	1600
	moderate overloads	690V	(A)	160	200	250	315	400	500	630	800	1000	1250	1250
	AC22A	415V	(A)	160	200	250	315	400	500	630	800	1000	1250	1600
	Mixed resistive and inductive loads,	500V	(A)	160	200	250	315	400	400	630	800	1000	1250	1250
	including moderate overloads	690V	(A)	160	200	250	315	400	400	630	800	1000	1250	400
	AC23A	415V	(A)	160	200	250	315	400	500	630	800	1000	1250	1250
	Switching of motor loads or other highly	500V	(A)	125	125	200	250	315	315	500	800	800	800	800
	inductive loads (3 phase / 3 pole)	690V	(A)	100	160	160	200	250	250	400	400	400	400	400
	AC23A Rated operational power	415V	kW	85	105	130	165	200	210	330	420	525	630	630
Rated making capacity		415V AC23	(A)	1600	2000	2500	3150	4000	4000	6300	6300	6300	6300	6300
Rated breaking capacity		415V AC23	(A)	1280	1600	2000	2520	3200	3200	5040	5040	5040	5040	5040
Short circuit withstand current 1sec			(kA)	8	8	8	13	13	13	26.5	26.5	26.5	26.5	26.5
Short circuit withstand current 0.25 sec			(kA)	16	16	16	26	26	26	53	53	53	53	53
Short circuit making capacity		415V	(kA)	13.5	13.5	13.5	26	26	26	30	30	30	30	30
Rated fuse short-circuit current	Back up fuse		(A)	160	200	250	315	400	400	630	800	1000	1000	-
	R.M.S value		(kA)	100	50	50	50	50	50	50	100	100	100	-
	Peak value		(kA)	16	20	25	25	30	30	40	70	90	100	-
	Cable section		mm^2	120	120	120	185	2x150	2x150	2x185	2x240	-	-	-
	Bars dimension		mm	20x5	20x5	20x5	2x (25x4)	2x (25x4)	2x (25x4)	2x (32x6)	2x (50x5)	2x (50x6)	2x (50x8)	2x (80x102)

(*) Neutral pole 1250A.
Full current neutral pole available on request.

AUXILIARY CONTACTS

		590.PL00400x	590.PL005	590.PL0060xx
Rated thermal current	400V	16A	10A	10A
	250V	16A	16A	16A
Rated operational current AC15	400V	4.5A	-	-
	250V	6A	1A	1A

Break before main contacts switches.

STAINLESS STEEL ENCLOSURE - 16A-160A

REFERENCE STANDARDS

EN 60947-3
Low voltage switchgear and controlgear.
Part 3: switches, disconnectors, switch-disconnectors and fuse-combination unit.

EN 60529
Degrees of protection provided by enclosure.

VERSIONS

Surface mounting

TECHNICAL CHARACTERISTICS

Polarity:	**2P-3P-3P+N-6P-8P**
Rated current:	**16A*-20A-25A*-32A-40A-63A 80A-100A-125A-160A**
Protection degree:	**IP65**
Operating ambient temperature according to the reference standard:	**-5°C +40°C**
Min-Max. operating ambient temperature:	**-25°C +60°C**
IK degree:	**IK10**
Material:	**Stainless steel 304L (316L stainless steel on request)**

3P+N with late break early make neutral pole.
Equipped with door locking.
Padlockable handle.
* Only for 6 and 8 poles.

BEHAVIOUR WITH CHEMICAL AND ATMOSPHERIC AGENTS

Saline solution	Acids		Bases		Solvents				Mineral oil	Rayons UV
	Concentrated	Diluted	Concentrated	Diluted	Hexane	Benzol	Acetone	Alcohol		
Resistant	Limited Resistance	Resistant	Resistant	Resistant	Resistant	Resistant	Resistant	Resistant	Resistant	Resistant

CABLE INLETS

Stainless steel enclosure 3 and 4 poles

Size	Rated current (A)	Nr of poles	Enclosure dimensions	Cable entries		
1	20-32-40	3-4	176x136x85	Top	-	Blank side
				Bottom	-	Blank side
				Rear	-	Blank side
2	63-80-100	3-4	226x176x90	Top	-	Blank side
				Bottom	-	Blank side
				Rear	-	Blank side
3	125-160	3-4	306x226x115	Top	-	Blank side
				Bottom	-	Blank side
				Rear	-	Blank side

Perforated or threaded entries on request.

CABLE INLETS

Stainless steel enclosure 6 and 8 poles

Size	Rated current (A)	Nr of poles	Enclosure dimensions	Cable entries		
3	16-25-32-40-63-80-100-125-160	6-8	306x226x115	Top	-	Blank side
				Bottom	-	Blank side
				Rear	-	Blank side

Perforated or threaded entries on request.

APPLICATION EXAMPLES

TECHNICAL DATA SWITCH DISCONNECTORS 2P,3P, 3P+N

					20A	32A	40A	63A	80A	100A	125A	160A
Rated insulation voltage	**Ui**			VAC	690	690	690	800	800	800	800	800
Rated impulse withstand voltage	**Uimp**			kV	4	4	4	8	4	8	8	8
Thermal current	**Ith/Ithe**			A	30	40	40	63	80	100	125	160
Rated operational current – Ie	**AC21A** Resistive loads, including moderate overloads		415V	A	20	32	40	63	80	100	125	160
			500V	A	20	32	32	63	80	100	125	160
			690V	A	20	32	32	63	80	100	125	160
	AC22A Mixed resistive and inductive loads, including moderate overloads		415V	A	20	32	40	63	80	100	125	160
			500V	A	20	32	32	63	80	100	125	160
			690V	A	20	32	32	40	40	-	125	160
	AC23A Switching of motor loads or other highly inductive loads (3 phase / 3 pole)		415V	A	20	32	35	63	80	100	125	160
			500V	A	20	25	25	63	63	-	125	125
			690V	A	20	25	25	32	32	-	100	100
	AC23A Rated operational power		415V	kW	9	15	18.5	35	37	46	55	69
	AC3 Squirrel-cage motor: starting, switching off motor during running (3 phase / 3 pole)		400V	A	-	28.5	28.5	-	-	-	-	-
			690V	A	12	20	20	25	32	-	-	-
Rated short time withstand current	**Icw** (1s)			A	400	400	400	1500	1500	1500	3000	3000
Conditional short circuit current	**Ip**			KAeff	10	10	10	50	50	30	50	50
Associate fuse size for conditional short circuit current - Type gG				A	20	32	40	63	80	100	125	125
Flexible wire				mm^2	1.5-10	1.5-10	1.5-10	10-50	10-50	10-50	10-70	10-70
Rigid wire				mm^2	1.5-16	1.5-16	1.5-16	10-50	16-50	10-50	10-70	10-70

TECHNICAL DATA SWITCH DISCONNECTORS 6 AND 8 POLES

				16A	25A	32A	40A	63A	80A	100A	125A	160A
Rated insulation voltage	**Ui**		VAC	800	800	800	800	800	800	800	800	800
Rated impulse withstand voltage	**Uimp**		kV	8	8	8	8	8	8	8	8	8
Thermal current	**Ith/Ithe**		A	16	25	32	40	63	80	100	125	160
Rated operational current – Ie	**AC21A** Resistive loads, including moderate overloads	415V	A	16	25	32	40	63	80	100	125	160
		500V	A	16	25	32	40	63	160	80	125	160
		690V	A	16	25	32	40	63	160	80	125	160
	AC22A Mixed resistive and inductive loads, including moderate overloads	415V	A	16	25	32	40	63	160	80	125	160
		500V	A	16	25	32	40	63	160	80	125	160
		690V	A	16	25	32	40	40	40	40	125	160
	AC23A Switching of motor loads or other highly inductive loads (3 phase / 3 pole)	415V	A	16	25	32	40	63	80	100	125	160
		500V	A	16	25	32	40	63	63	63	125	125
		690V	A	16	25	25	25	32	32	32	100	100
	AC23A Rated operational power	415V	kW	7.5	11	15	18.5	35	37	46	55	69
Rated short time withstand current	**Icw** (1s)		A	1100	1100	1100	1100	1500	1500	1500	3000	3000
Conditional short circuit current	**Ip**		KAeff	50	50	50	50	50	50	30	50	50
Associate fuse size for conditional short circuit current - Type gG			A	16	25	32	40	63	80	100	125	125
Flexible wire			mm^2	4-25	4-25	4-25	4-25	10-50	10-50	10-50	10-70	10-70
Rigid wire			mm^2	4-25	4-25	4-25	4-25	10-50	10-50	10-50	10-70	10-70

PHOTOVOLTAIC/DC SWITCH DISCONNECTORS THERMOPLASTIC INSULATED ENCLOSURE 10A-40A (800V DC)

REFERENCE STANDARDS

EN 60947-3
Low voltage switchgear and controlgear.
Part 3: switches, disconnectors, switch-disconnectors and fuse-combination unit.

IEC 60364-7-712
Requirements for special installations or locations
Solar photovoltaic (RV) power supply systems.

EN 60529
Degrees of protection provided by enclosure.

VERSIONS

Surface mounting

Scame embraces completely the renewable energy sources philosophy and the respect for the environment.
In our production plant and office building we have installed 250kWp of photovoltaic system. We follow up this field in several countries with a wide range of products.
From our experience is born the new range of DC Isolators specific for photovoltaic systems.
In according to the IEC 60364-7-712, in every photovoltaic installation it is necessary to isolate the photovoltaic panel from the rest of the system, DC Isolators must have a higher performance than the traditional AC Isolators because breaking direct current is more difficult than breaking alternating current, and furthermore in a photovoltaic system the voltage can reach even 800V.
The current and voltage values changes depending on the combination of the photovoltaic cells. DC Isolator range has been set up focusing on all of the main photovoltaic installations in order to get a range as essential as possible, simplify the choice of the customer and for have the maximum quality and technical characteristics. In the meantime we are improving and up grading constantly our products, following and anticipating the change that the market requires due to the incentives available. Scame ISOLATORS Series includes also a complete range of AC Isolators, essential to make a photovoltaic system in compliance with IEC 60364-7-712.
Finally in the photovoltaic range it is available a huge range of water tight cabinets and consumer unit suitable for make distribuition board & export control.

TECHNICAL CHARACTERISTICS

Poles in series:	**3P-4P-5P-6P-8P**
Rated current (800V):	**10A-15A-20A-25A-30A-40A**
Protection degree:	**IP65**
Operating ambient temperature according to the reference standard:	**-5°C +40°C**
Min-Max. operating ambient temperature:	**-25°C +60°C**
IK degree:	**IK08**
Material:	**Thermoplastic**
Insulation class:	**Class II (double insulation)** ⧈
Glow wire test:	**650°C (enclosure)** **850°C (switch)**

BEHAVIOUR WITH CHEMICAL AND ATMOSPHERIC AGENTS

Saline solution	Acids		Bases		Solvents				Mineral oil	Rayons UV
	Concentrated	Diluted	Concentrated	Diluted	Hexane	Benzol	Acetone	Alcohol		
Resistant	Limited Resistance	Resistant	Resistant	Resistant	Not Resistant	Not Resistant	Not Resistant	Limited Resistance	Limited Resistance	Resistant

CABLE INLETS

Photovoltaic/DC switch disconnectors thermoplastic insulated enclosure 3 and 4 poles

Size	Rated current (A)	Rated voltage (V)	Nr of poles in series	Enclosure dimensions	Cable entries		
1	16	450V	4	150x105x82	Top	1xM20+1xM25	Knock-outs
					Bottom	1xM20+1xM25	Knock-outs
					Rear	1xM20+1xM25	Knock-outs
2	15-20	800V	3-4-5	150x105x100	Top	-	Blank side (°)
					Bottom	-	Blank side (°)
					Rear	-	Blank side (°)
					Right	M25	Knock-out
					Left	M25	Knock-out
3	25-30	800V	6-8	210x155x107	Top	2xM32	Knock-outs
					Bottom	2xM32	Knock-outs
					Rear	-	Blank side (°)
4	40	800V	8	308x228x128	Top	-	Blank side (°)
					Bottom	-	Blank side (°)

(°) Perforated or threaded entries on request.

APPLICATION EXAMPLES

TECHNICAL DATA DC SWITCH DISCONNECTORS FOR PHOTOVOLTAIC DC APPLICATION

				16A	15A	20A	25A	30A	40A
Rated insulation voltage	**Ui**		VAC	690	1500	1500	1500	1500	1500
Rated impulse withstand voltage	**Uimp**		kV	4	8	8	8	8	8
Thermal current	**Ith/Ithe**		A	30	63	63	63	63	125
Rated operational current - Ie	**DC21A** Resistive loads, including moderate overloads	300V	A	32	-	-	-	-	-
		400V	A	-	30	35	40	60	80
		450V	A	16	-	-	-	-	-
		500V	A	-	30	35	40	45	65
		600V	A	-	20	25	40	40	60
		750V	A	-	15	20	25	30	40
		800V	A	-	15	20	25	30	40
Rated short time withstand current	**Icw** (1s)		A	400	1100	1100	1100	1100	3000
Flexible wire			mm²	1.5-10	16	16	16	16	70
Rigid wire			mm²	1.5-10	16	16	35	16	70

POSSIBLE CONTACT WIRINGS

SWITCH LINKING

In order to make easier the work of the installer, it is possible to choose the manner of wiring of the poles in series. In this way the incoming and the outgoing can be varied both on the top side and on the bottom side. In the packaging jumpers are supplied to cover the chosen configuration.

590.DCGE0815 - (4 POLES IN SERIES) - 3 JUMPERS SUPPLIED

590.DCGE0820 - (5 POLES IN SERIES) - 4 JUMPERS SUPPLIED

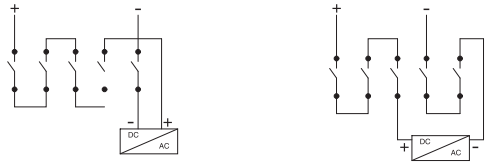

590.DCGE0825 - (6 POLES IN SERIES) - 5 JUMPERS SUPPLIED

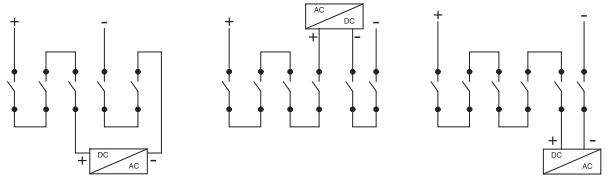

590.DCGE0830 - (8 POLES IN SERIES) - 8 JUMPERS SUPPLIED

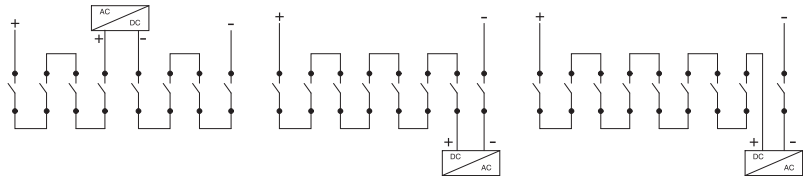

ENCLOSED CHANGE-OVER SWITCHES I/O/II 16A-160A

REFERENCE STANDARDS

EN 60947-3
Low voltage switchgear and controlgear.
Part 3: switches, disconnectors, switch-disconnectors and fuse-combination unit.

EN 60529
Degrees of protection provided by enclosure.

VERSIONS

Thermoplastic version

Aluminium version

Stainless steel version

TECHNICAL CHARACTERISTICS

Polarity:	**3P-3P+N**
Rated current:	**16A-25A-32A-40A-63A 80A-100A-125A-160A**
Protection degree:	**IP65**
Operating ambient temperature according to the reference standard:	**-5°C +40°C**
Min-Max. operating ambient temperature:	**-25°C +60°C**
Material:	**Thermoplastic Die-cast aluminium Stainless steel 304L (316L stainless steel on request)**
IK degree:	**IK08 Thermoplastic IK10 Aluminium/Stainless Steel**
Glow wire test:	**650°C (Thermoplastic)**
Colour:	**Grey RAL7035 (Thermoplastic) Grey RAL7015 (Aluminium)**

3P+N with late break early make neutral pole.

ISOLATORS-TP Series (Thermoplastic)

BEHAVIOUR WITH CHEMICAL AND ATMOSPHERIC AGENTS

Saline solution	Acids		Bases		Solvents				Mineral oil	Rayons UV
	Concentrated	Diluted	Concentrated	Diluted	Hexane	Benzol	Acetone	Alcohol		
Resistant	Limited Resistance	Resistant	Resistant	Resistant	Not Resistant	Not Resistant	Not Resistant	Limited Resistance	Limited Resistance	Resistant

CABLE INLETS

Thermoplastic insulated enclosure 3P - 3P+N

Size	Rated current (A)	Nr of poles	Enclosure dimensions	Cable entries		
4	16-25-32-40	3P - 3P+N	210x155x107	Top	2xM32	Knock-outs
				Bottom	2xM32	Knock-outs
				Rear	-	Blank side (°)
5	63-80-100	3P - 3P+N	308x228x128	Top	-	Blank side (°)
				Bottom	-	Blank side (°)
				Rear	-	Blank side (°)
6	125-160	3P - 3P+N	338x308x128	Top	-	Blank side (°)
				Bottom	-	Blank side (°)
				Rear	-	Blank side (°)

(°) Perforated or threaded entries on request.

ISOLATORS-AL Series (Aluminium)

BEHAVIOUR WITH CHEMICAL AND ATMOSPHERIC AGENTS

Saline solution	Acids		Bases		Solvents				Mineral oil	Rayons UV
	Concentrated	Diluted	Concentrated	Diluted	Hexane	Benzol	Acetone	Alcohol		
Resistant	Limited Resistance	Resistant	Limited Resistance	Limited Resistance	Resistant	Limited Resistance	Limited Resistance	Resistant	Resistant	Resistant

CABLE INLETS

Aluminium enclosure 3P - 3P+N

Size	Rated current (A)	Nr of poles	Enclosure dimensions	Cable entries		
2	16-25-32-40	3P - 3P+N	210x155x107	Top	2xM32	Threaded entries
				Bottom	2xM32	Threaded entries
				Rear	-	Blank side (°)
3	63-80-100	3P - 3P+N	315x264x122	Top	-	Blank side (°)
				Bottom	-	Blank side (°)
				Rear	-	Blank side (°)
4	125-160	3P - 3P+N	410x315x128	Top	-	Blank side (°)
				Bottom	-	Blank side (°)
				Rear	-	Blank side (°)

(°) Perforated or threaded entries on request.

ISOLATORS-INOX Series (Stainless steel)

BEHAVIOUR WITH CHEMICAL AND ATMOSPHERIC AGENTS

Saline solution	Acids		Bases		Solvents				Mineral oil	Rayons UV
	Concentrated	Diluted	Concentrated	Diluted	Hexane	Benzol	Acetone	Alcohol		
Resistant	Limited Resistance	Resistant	Resistant	Resistant	Resistant	Resistant	Resistant	Resistant	Resistant	Resistant

CABLE INLETS

Stainless steel enclosure 3P - 3P+N

Size	Rated current (A)	Nr of poles	Enclosure dimensions	Cable entries		
3	16-25-32-40 63-80-100	3P - 3P+N	306x226x115	Top	-	Blank side
				Bottom	-	Blank side
				Rear	-	Blank side
4	125-160	3P - 3P+N	412x312x115	Top	-	Blank side
				Bottom	-	Blank side
				Rear	-	Blank side

Perforated or threaded entries on request.

TECHNICAL DATA SWITCH DISCONNECTORS 3P - 3P+N

				16A	25A	32A	40A	63A	80A	100A	125A	160A
Rated insulation voltage	**Ui**		VAC	800	800	800	800	800	800	800	800	800
Rated impulse withstand voltage	**Uimp**		kV	8	8	8	8	8	8	8	8	8
Thermal current	**Ith/Ithe**		A	16	25	32	40	63	80	100	125	160
Rated operational current - Ie	**AC21A** Resistive loads, including moderate overloads	415V	A	16	25	32	40	63	80	100	125	160
		500V	A	16	25	32	40	63	160	80	125	160
		690V	A	16	25	32	40	63	160	80	125	160
	AC22A Mixed resistive and inductive loads, including moderate overloads	415V	A	16	25	32	40	63	160	80	125	160
		500V	A	16	25	32	40	63	160	80	125	160
		690V	A	16	25	32	40	40	40	40	125	160
	AC23A Switching of motor loads or other highly inductive loads (3 phase / 3 pole)	415V	A	16	25	32	40	63	80	100	125	160
		500V	A	16	25	32	40	63	63	63	125	125
		690V	A	16	25	25	25	32	32	32	100	100
Rated short time withstand current	**Icw** (1s)		A	1100	1100	1100	1100	1500	1500	1500	3000	3000
Conditional short circuit current			KAeff	50	50	50	50	50	50	30	50	50
Associate fuse size for conditional short circuit current - Type gG			A	16	25	32	40	63	80	100	125	125
Flexible wire			mm²	4-25	4-25	4-25	4-25	10-50	10-50	10-50	10-70	10-70
Rigid wire			mm²	4-25	4-25	4-25	4-25	10-50	10-50	10-50	10-70	10-70

APPLICATION EXAMPLES

THERMOPLASTIC INSULATED ENCLOSURE 16A-160A

REFERENCE STANDARDS

EN 60947-3
Low voltage switchgear and controlgear.
Part 3: switches, disconnectors, switch-disconnectors and fuse-combination unit.

EN 60529
Degrees of protection provided by enclosure.

VERSIONS

Flush mounting

Surface mounting

TECHNICAL CHARACTERISTICS

Polarity:	**1P-2P-3P-3P+N-4P-6P-8P**
Rated current:	**16A*-20A-25A*-32A-40A-63A 80A-100A-125A-160A**
Protection degree:	**IP55 flush mounting version IP65 surface mounting version**
Operating ambient temperature according to the reference standard:	**-5°C +40°C**
Min-Max. operating ambient temperature:	**-25°C +60°C**
Material:	**Engineering plastic**
IK degree:	**IK08**
Glow wire test:	**650°C**
Colour:	**Grey RAL7035**
Insulation class:	**Class II (double insulation)** ⧈

3P+N with late break early make neutral pole.
Equipped with door locking.
Padlockable handle.
* Only for 6 and 8 poles.

BEHAVIOUR WITH CHEMICAL AND ATMOSPHERIC AGENTS

Saline solution	Acids		Bases		Solvents				Mineral oil	Rayons UV
	Concentrated	Diluted	Concentrated	Diluted	Hexane	Benzol	Acetone	Alcohol		
Resistant	Limited Resistance	Resistant	Resistant	Resistant	Not Resistant	Not Resistant	Not Resistant	Limited Resistance	Limited Resistance	Resistant

CABLE INLETS

Thermoplastic insulated enclosure 1, 2, 3, 4 poles

Size	Rated current (A)	Nr of poles	Enclosure dimensions	Cable entries		
1	20-32-40	1	120x82x69	Top	1xM20+1xM25	Knock-outs
				Bottom	1xM20+1xM25	Knock-outs
				Rear	2xM20	Knock-outs
2	20-32-40	2-3-4	125x136x84(*)	Top	3xM20/M25	Knock-outs
				Bottom	3xM20/M25	Knock-outs
				Right	2xM20	Knock-outs
				Left	2xM20	Knock-outs
				Rear	2xM20/M25	Knock-outs
3	20-32-40	2-3-4	150x105x82	Top	1xM20+1xM25	Knock-outs
				Bottom	1xM20+1xM25	Knock-outs
				Rear	1xM20+1xM25	Knock-outs
4	63-80-100	2-3-4	210x155x107	Top	2xM32	Knock-outs
				Bottom	2xM32	Knock-outs
				Rear	-	Blank side (°)
5	125	3-4	308x228x128	Top	-	Blank side (°)
				Bottom	-	Blank side (°)
				Rear	-	Blank side (°)
6	160	3-4	338x308x128	Top	-	Blank side (°)
				Bottom	-	Blank side (°)
				Rear	-	Blank side (°)

(*) Omnia enclosure.
(°) Perforated or threaded entries on request.

CABLE INLETS

Thermoplastic insulated enclosure 6 and 8 poles

Size	Rated current (A)	Nr of poles	Enclosure dimensions	Cable entries		
4	16-25-32-40	6-8	210x155x107	Top	2xM32	Knock-outs
				Bottom	2xM32	Knock-outs
				Rear		Blank side (°)
5	63-80-100	6-8	308x228x128	Top		Blank side (°)
				Bottom		Blank side (°)
				Rear		Blank side (°)
6	125-160	6-8	338x308x128	Top		Blank side (°)
				Bottom		Blank side (°)
				Rear		Blank side (°)

(°) Perforated or threaded entries on request.

APPLICATION EXAMPLES

TECHNICAL DATA SWITCH DISCONNECTORS 1 POLES

				20A	32A	40A
Rated insulation voltage	**Ui**		VAC	250	250	250
Rated impulse withstand voltage	**Uimp**		kV	4	4	4
Thermal current	**Ith/Ithe**		A	20	32	40
Rated operational current – Ie	**AC22A** Mixed resistive and inductive loads, including moderate overloads	250V	A	20	32	40
	AC23A Switching of motor loads or other highly inductive loads (3 phase / 3 pole)	250V	A	16	20	25
Rated short time withstand current	**Icw** (1s)		A	480	480	480
Conditional short circuit current	**Ip**		kAeff	10	10	10
Associate fuse size for conditional short circuit current - Type gG			A	20	32	40
Flexible wire			mm²	6	6	6
Rigid wire			mm²	6	6	6

TECHNICAL DATA SWITCH DISCONNECTORS 2P, 3P, 3P+N, 4P

				20A	32A	40A	63A	80A	100A	125A	160A
Rated insulation voltage	**Ui**		VAC	690	690	690	690	690	800	800	800
Rated impulse withstand voltage	**Uimp**		kV	4	4	4	4	4	8	8	8
Thermal current	**Ith/Ithe**		A	30	40	40	63	86	100	125	160
Rated operational current – Ie	**AC21A** Resistive loads, including moderate overloads	415V	A	20	32	40	63	80	100	125	160
		500V	A	20	32	32	63	80	100	125	160
		690V	A	20	32	32	63	80	100	125	160
	AC22A Mixed resistive and inductive loads, including moderate overloads	415V	A	20	32	40	63	80	100	125	160
		500V	A	20	32	32	63	80	100	125	160
		690V	A	20	32	32	63	80	-	125	160
	AC23A Switching of motor loads or other highly inductive loads (3 phase / 3 pole)	415V	A	20	32	35	63	67	100	125	160
		500V	A	20	25	25	40	67	-	125	125
		690V	A	20	25	25	30	38	-	100	100
	AC23A Rated operational power	415V	kW	9	15	18.5	33	37	46	55	69
	AC3 Squirrel-cage motor: starting, switching off motor during running (3 phase / 3 pole)	415V	A	-	28.5	28.5	40	55	-	-	-
		690V	A	12	20	20	25	32	-	-	-
	DC22A Mixed resistive and inductive loads, including moderate overloads	250V	A	25(*)	32(*)	32(*)	-	-	-	-	-
		600V	A	10(*)	10(*)	10(*)	-	-	-	-	-
Rated short time withstand current	**Icw** (1s)		A	400	400	400	1500	1500	1500	3000	3000
Conditional short circuit current	**Ip**		KAeff	10	10	10	10	10	30	50	50
Associate fuse size for conditional short circuit current - Type gG			A	20	32	40	63	80	100	125	125
Flexible wire			mm²	1.5-10	1.5-10	1.5-10	10-35	10-35	10-50	10-70	10-70
Rigid wire			mm²	1.5-16	1.5-16	1.5-16	10-35	10-35	10-50	10-70	10-70

(*) Only 4P with 2+2 poles in series

TECHNICAL DATA SWITCH DISCONNECTORS 6 AND 8 POLES

				16A	25A	32A	40A	63A	80A	100A	125A	160A
Rated insulation voltage	**Ui**		VAC	800	800	800	800	800	800	800	800	800
Rated impulse withstand voltage	**Uimp**		kV	8	8	8	8	8	8	8	8	8
Thermal current	**Ith/Ithe**		A	16	25	32	40	63	80	100	125	160
Rated operational current – Ie	**AC21A** Resistive loads, including moderate overloads	415V	A	16	25	32	40	63	80	100	125	160
		500V	A	16	25	32	40	63	160	80	125	160
		690V	A	16	25	32	40	63	160	80	125	160
	AC22A Mixed resistive and inductive loads, including moderate overloads	415V	A	16	25	32	40	63	160	80	125	160
		500V	A	16	25	32	40	63	160	80	125	160
		690V	A	16	25	32	40	40	40	40	125	160
	AC23A Switching of motor loads or other highly inductive loads (3 phase / 3 pole)	415V	A	16	25	32	40	63	80	100	125	160
		500V	A	16	25	32	40	63	63	63	125	125
		690V	A	16	25	25	25	32	32	32	100	100
	AC23A Rated operational power	415V	kW	7.5	11	15	18.5	35	37	46	55	69
Rated short time withstand current	**Icw** (1s)		A	1100	1100	1100	1100	1500	1500	1500	3000	3000
Conditional short circuit current	**Ip**		KAeff	50	50	50	50	50	50	30	50	50
Associate fuse size for conditional short circuit current - Type gG			A	16	25	32	40	63	80	100	125	125
Flexible wire			mm²	4-25	4-25	4-25	4-25	10-50	10-50	10-50	10-70	10-70
Rigid wire			mm²	4-25	4-25	4-25	4-25	10-50	10-50	10-50	10-70	10-70

4P SWITCH LINKING FOR DC APPLICATION

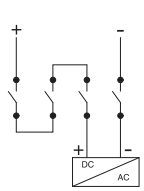

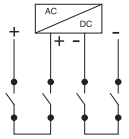

DISTRIBUTION PEDESTALS TERMINALS

REFERENCE STANDARDS

CEI 64-8/7 section 708/711
IEC 60364-7-709
IEC 60364-7-711
IEC 60364-7-740
Electrical installations.

CEI EN 61439-1
CEI EN 61439-7
Assembled equipment.

CHARACTERISTICS OF THE "SAFE-IN" OPTIMA SERIES PLUGS

VERSIONS

Distribution pedestals terminals with DOMINO in painted metal sheet / stainless steel

Distribution pedestals terminals with MBOX in painted metal sheet / stainless steel

Distribution pedestals terminals in thermoplastic material SMART-K - SMART-C - SMART-X

Distribution pedestals terminals in thermoplastic material (fire-proof versions) SMART-K - SMART-C

Distribution pedestals terminals with BLOCK in painted metal sheet

TECHNICAL CHARACTERISTICS

Operating temperature:	**-25°C +40°C**
Protection degree:	**Plastic: IP56** **Metal: IP66**
Max. operating ambient temperature according to the reference standard:	**+60°C**
Insulation class:	**Class II (double insulation)** ⧈
Material:	**Zinc-plated metal sheet/ Thermoplastic/Stainless steel**
IK degree at 20°C:	**IK10**
Plastic colour:	**Blue - Green - Yellow - Red - White (No RAL reference)**
Power supply terminal board:	**Upon request**
Water service:	**Upon request**
Circuit breakers:	**Supplied 6A** **other sizes upon request**

POSSIBILITY TO CONFIGURE OTHER VERSIONS (UPON REQUEST)

THE "SAFE-IN" SAFETY DEVICE

The "**SAFE-IN**" safety device assembled on the 16A industrial sockets is the most innovative element of the new OPTIMA Series.
The "**SAFE-IN**" device works like the protection installed on household sockets, i.e., by means of an appropriate shutter, it closes the input of the socket contact tubes and prevents accidental and voluntary contact of live parts of the socket with slim objects, such as screwdrivers or wires.
This protection offers an additional safety guarantee, in addition to that already provided by the spring-loaded cover assembled on the mobile sockets.

SAFETY LEVEL

The OPTIMA Series sockets with the "**SAFE-IN**" safety device guarantee a higher level of safety in comparison with ordinary industrial sockets, especially in environments where there may be children present or people who have not been trained about electrical dangers (public areas, amusement parks, campgrounds, open markets, etc.).
Dangerous situations, such as the important examples illustrated in the figure to the side, can be resolved thanks to the new OPTIMA Series sockets equipped with the "**SAFE-IN**" safety device.

BEHAVIOUR WITH CHEMICAL AND ATMOSPHERIC AGENTS

Saline solution	Acids		Bases		Solvents				Mineral oil	UV rays
	Concentrated	Diluted	Concentrated	Diluted	Hexane	Benzol	Acetone	Alcohol		
Resistant	Limited Resistance	Resistant	Resistant	Resistant	Not Resistant	Not Resistant	Not Resistant	Limited Resistance	Resistant	Resistant

THE ONLY DISTRIBUTION PEDESTALS TERMINALS WITH INCREASED DEGREE OF SAFETY

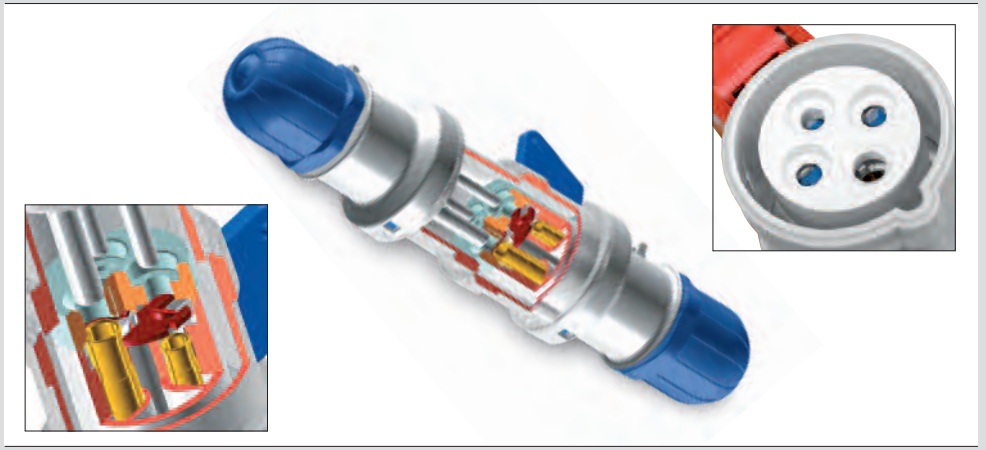

Connector tube protective shutter for greater safety against direct contacts. (The SAFE-IN safety device).

STAND ALONE

The charging stations are not connected one to the other and work independently. The charging stations administrator can leave them in free charging mode (FREE) or limited to authorized users (PERSONAL). Through the card programmer, the administration can nevertheless influence the charging operation depending on a specific time or number of accesses.

ACTIVE CARD
Each User Card can be programmed by assigning it an expiry date and/or a limited number of accesses through the 208.PROG programmer, to be connected to one's computer, and the SLActive software supplied with the User Card.

Programmer and User Card in HF technology

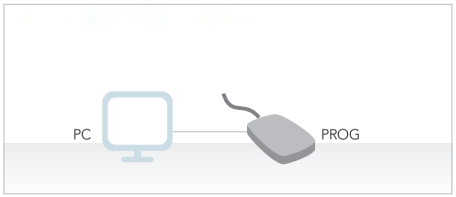

SLActive Software

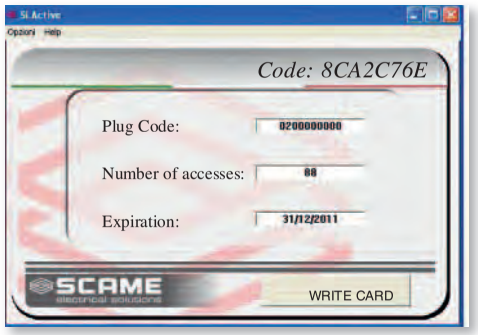

NET

The stations are connected one to the other to a local server whose access is assigned exclusively to the stations administrator. In addition to being a data concentrator, the server also contains the standard software developed in cooperation with our standard partner GENERALE SISTEMI; this software makes it possible to manage users, monitor and configure the stations, calculate the consumptions, etc. Through the card programmer, the administration can nevertheless influence the charging operation depending on a specific time or number of accesses.
The services are managed through a local server positioned near the columns.

The management system of SCAME stations does not required the installation of any software for its operation as the program is already stored on the server.

The web page provided here below displays in real time the operating status of the plugs of the connected stations.

Local server with standard management software

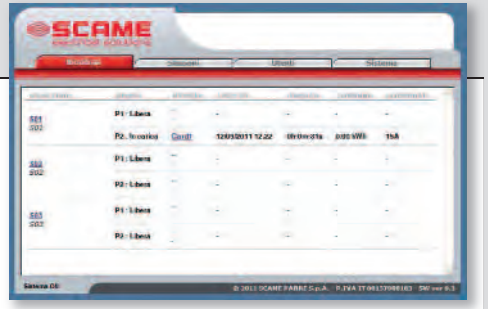

UPON REQUEST, SCAME SUPPLIES REMOTE READING AND REMOTE MANAGEMENT SYSTEMS FOR ENERGY DISPENSERS

LAMPHOLDER

REFERENCE STANDARDS

EN 60238
Edison screw lampholders.

EN 60838-1
Miscellaneous lampholders.
Part 1: general requirements and tests.

EN 61058-1
Switches for appliances.
Part 1: general requirements.

TYPE OF COUPLING

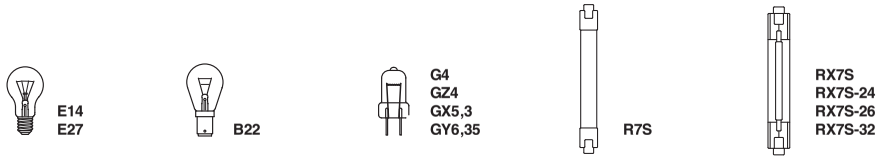

VERSIONS

Lampholders
- For incandescent lamps (E14-E27)
- For fluorescent lamps (G5-G23)
- For halogen lamps (G4-GX53-GY6.35-R75)

Switches
- press switches
- pull switches
- slide in-line switches
- foot switches

Ceiling accessories

QUALITY MARKS

03

APPLICATION EXAMPLES

Thermoset lampholders:
left, with E27 coupling, partly threaded skirt and metal nipple; right, with E14 coupling, fully threaded skirt and moulded thread.

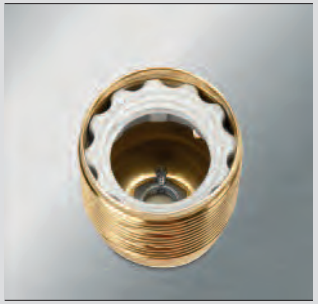

Metal lampholder.
Detail of locking screw and earth terminal.

Slide in-line switch, with neutral connection for flat cable.

DISTRIBUTION ASSEMBLIES - IP66

REFERENCE STANDARDS

EN 60670-1
Boxes and enclosure for alectrical accessories for household and similar fixed alectrical installation.
Part 1: general requirements.

EN 61439-3
Low-voltage switchgear and controlgear assemblies.
Part 3: distribution boards intended to be operated by ordinary persons (DBO).

EN 61439-4
Low-voltage switchgear and controlgear assemblies.
Part 4: particular requirements for assemblies for construction sites (ACS)

VERSIONS

MBOX2
- Portable
- Wall installation
- Trestle installation
- Turret installation
- Pole fastening

MBOX3
- Portable
- Wall installation
- Trestle installation
- Pole fastening

MBOX5
- Wall installation
- Trestle installation
- Pole fastening
- Portable with two folding handles

QUALITY MARKS

TECHNICAL CHARACTERISTICS COMMON TO THE ENTIRE PRODUCT LINE

Protection degree:	**IP66-IP65 (version with emergency button)**
Operating ambient temperature according to the reference standard:	**-25°C +40°C**
Max. operating ambient temperature:	**60°C**
Glow Wire test:	**650°C**
IK degree at 20°C:	**IK08-IK09**
Material:	**Engineering plastic**
Insulation class:	**Class II (double insulation)**
Dissipaple power according to CEI 23-49 standard:	**-**

The Logotype featuring SCAME MBOX2 series.

"REGISTERED DESIGN"

BEHAVIOUR WITH CHEMICAL AND ATMOSPHERIC AGENTS

Saline solution	Acids		Bases		Solvents				Mineral oil	UV rays
	Concentrated	Diluted	Concentrated	Diluted	Hexane	Benzol	Acetone	Alcohol		
Resistant	Limited Resistance	Resistant	Limited Resistance	Resistant	Not Resistant	Not Resistant	Not Resistant	Limited Resistance	Limited Resistance	Resistant

MBOX2 TECHNICAL CHARACTERISTICS

Dimensions: **432x365x290 mm**
Power supply: **With 16mm2 terminal box (5 poles) or with mobile (16/32A)**
Cable lenght: **2m**
Cable entry: **M32 or M25 break-throught input and cable for power supply and M16 break-through for earthing cable**

- Switchboard for 16 DIN modules (2 rows of 8 modules) with tinted door and YALE key or triangular lock.
- Possibility to install up to 4 interlocked OMNIA Series 16/32A socket with or without fuses or up to 6 flush mounting EUREKA Series 16/32A sockets
- Possibility to install the panel on turret or trestle
- Possibility to install the emergency push button
- Fuse-testing device housed in the swithcboard compartment (only in the versions with fuses)
- Possibility to house three spare fuses

MBOX3 TECHNICAL CHARACTERISTICS

Dimensions: **465x380x520mm**
Average weight: **15 Kg**
Power supply: **Cable input through hole for M40 cable gland.**

- M8 brass pin for earthing connection.
- 16 mm² power supply terminal box (5 poles) for currents up to 32A and 35 mm² terminal box (5 poles) for currents up to 125A.
- Possibility to equip the panel with a 63A or 125A fixed plug.
- Switchboard for 39 DIN modules (3 rows of 13 modules) with tinted door and YALE key or triangular lock.
- Possibility to install up to 6 interlocked OMNIA Series 16/32A sockets with or without fuses or up to 9 flush mounting EUREKA Series 16/32A sockets.
- In the version without door it is possible to install up to 4 interlocked OMNIA Series 16/32A sockets and an interlocked OMNIA Series 63A socket.
- Fuse-testing device inserted in the swithcboard compartment
- Possibility to install the emergency push button or a disconnector with functional control and emergency functions.

MBOX5 TECHNICAL CHARACTERISTICS

Dimensions: **775x400x670mm**
Average weight: **27 Kg**
Power supply: **Cable input through hole for M40 cable gland.**

- M8 brass pin for earthing connection
- 16 mm² power supply terminal box (5 poles) for currents up to 32A and 35 mm² terminal box (5 poles) for currents up to 125A
- Possibility of 70 mm² input/output terminal box (5 poles).
- Possibility to equip the panel with a 63A or 125A fixed plug.
- Switchboard for 52 DIN modules (4 rows of 13 modules) with tinted door and YALE key or triangular lock.
- Possibility to install up to 12 interlocked OMNIA Series sockets and 4 interlocked ADVANCE2 Series compact or large 16/32/63A sockets.
- Output terminal box: it is possible to install the OMNIA Series containers n. 572.0321 and n. 572.0322 respectively for terminal box output with or without protection (6 DIN modules).
- Fuse-testing device inserted in the switchboard compartment.
- Possiblity to house five spare fuses.
- Possibility to install the emergency push button or a disconnector with functional control and emergency functions.

APPLICATION EXAMPLES

MBOX NIGHT & DAY

NIGHT & DAY

MBOX turns on a new era with a box that is even more functional and complete. The addition of an automatic device (LED with extremely low consumption hooked up to a sensor) ensures proper lighting of the compartment containing outlets and switch gear and protection devices when the outdoor light intensity diminishes. This allows the product to be identified and used under conditions of poor lighting: ideal for the worksite, MBOX is also perfect for campsites and parking areas.

Extremely compact and totally safe, MBOX features an innovative design and it is made in collision-proof and self-extinguishing technopolymer, to withstand collisions and atmospheric agents. In compliance with the highest safety standards, the MBOX series includes a complete product range and comes in many customized versions, with fast delivery.

MBOX2

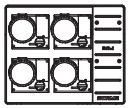

Version with 4 interlocked OMNIA Series sockets with fuses without emergency push button.

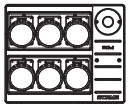

Version with 6 EUREKA Series flush mounting industrial sockets and emergency push button.

MBOX3

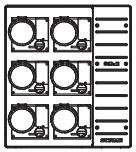

Version with 6 interlocked OMNIA Series sockets with fuses without emergency push button.

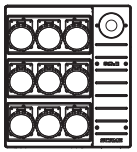

Version with 9 EUREKA Series flush mounting industrial sockets and emergency push button.

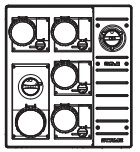

Version with 4 interlocked OMNIA Series 16/32A sockets with fuses and 1 interlocked OMNIA Series 64A socket and disconnector.

MBOX5

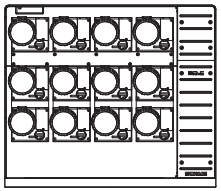

Version with 12 interlocked OMNIA Series sockets with fuses without emergency push button.

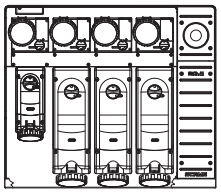

Version with 4 interlocked OMNIA Series sockets with fuses and 4 interlocked ADVANCE2 Series LARGE sockets and emergency push button.

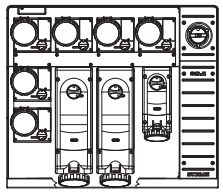

Version with 6 interlocked OMNIA Series sockets with fuses and 3 interlocked ADVANCE2 Series COMPACT and LARGE sockets with disconnector.

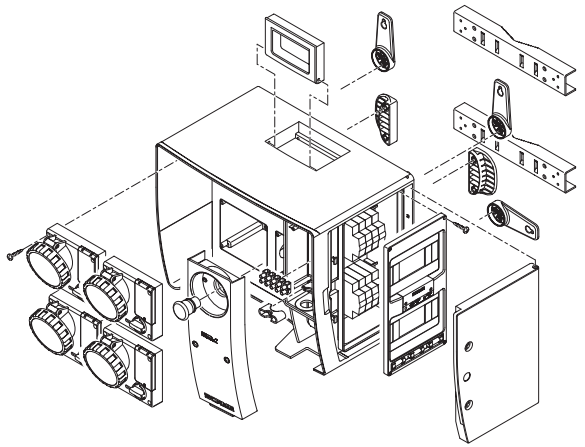

DISTRIBUTION ASSEMBLIES

VERSIONS

Distribution assemblies IP55
- transportable
- with SELV safety transformer 220/24V

REFERENCE STANDARDS

EN 61439-1
Low-voltage switchgear
and controlgear assemblies (BT panels).
Part 1: general requirements.

EN 61439-4
Low-voltage switchgear
and controlgear assemblies (BT panels).
Part 4: particular requirements for assemblies for construction sites.

EN 61439-2
Low-voltage switchgear
and controlgear assemblies (BT panels).
Part 2: power switchgear and controlgear assemblies

EN 61439-3
Low-voltage switchgear and controlgear assemblies.
Part 3: distribution boards intended to be operated by ordinary persons (DBO).

TECHNICAL CHARACTERISTICS

Rated current:	**125A÷630A**
Rated voltage:	**400V~**
Frequency:	**50Hz**
Insulating voltage:	**400V~**
Protection degree:	**IP55**
SELV transformer 220/24V:	**Yes**
Operating ambient temperature according to the reference standard:	**-25°C +40°C**
Max operating ambient temperature:	**60°C**
Glow Wire test:	**650°C**
Power output:	**70KW÷375KW**
Material:	**Engineering plastic**
Colour:	**Grey RAL 9007**

- Sturdy galvanized fire painted sheet iron.
- Fitted with a lifting device, handles on the side and a roof to protect it from rain or falling objects.
- The structure can be fastened to the ground (purposely fitted feet).

BEHAVIOUR WITH CHEMICAL AND ATMOSPHERIC AGENTS

Saline solution	Acids		Bases		Solvents				Mineral oil	UV rays
	Concentrated	Diluted	Concentrated	Diluted	Hexane	Benzol	Acetone	Alcohol		
Resistant	Not Resistant	Not Resistant	Limited Resistance	Resistant	Not Resistant	Not Resistant	Not Resistant	Limited Resistance	Resistant	Resistant

APPLICATION EXAMPLES

LIGHT FITTINGS

VERSIONS

For incandescent lamps - 60W 250V~
- Thermoplastic diffuser - IP44
- Polycarbonate diffuser - IP44 or IP55

For indicating working areas
- Polycarbonate diffuser - IP44

Automatic twilight turn-on
- Two operation modes

REFERENCE STANDARDS

EN 60598-1
Luminaires.
Part 1: general requirements and tests.

EN 60598-2-1
Luminaires.
Part 2: specific requirements
Section 1: fixed general purpose luminaires.

QUALITY MARKS

TECHNICAL CHARACTERISTICS

Protection degree:	**IP44-IP55**
Operating ambient temperature according to the reference standard:	**Thermoplastic diffuser: -5°C +35°C** **Polycarbonate diffuser: -15°C +35°C**
Glow Wire test:	**650°C**
Material:	**Engineering plastic**
IK degree at 20°C:	**IK04 - IK07**
Cable inlets:	**PG11-PG13**
Insulation class:	**Class II (double insulation)** ⧈
Lampholder type:	**E27 - B22**
Installation on inflammable surface:	**Yes**

BEHAVIOUR WITH CHEMICAL AND ATMOSPHERIC AGENTS

Saline solution	Acids		Bases		Solvents				Mineral oil	UV rays
	Concentrated	Diluted	Concentrated	Diluted	Hexane	Benzol	Acetone	Alcohol		
Resistant	Limited Resistance	Resistant	Limited Resistance	Limited Resistance	Limited Resistance	Not Resistance	Not Resistance	Resistant	Limited Resistance	Resistant

APPLICATION EXAMPLES

CABLE INLET

Five knockouts for PG11/PG13.5 cable inlets located around the four sides and on the base provide a wide range of installation options: with cable sleeve, with cable gland or with couplings between Ø 16 mm rigid or flexible conduit and box. A flexible conduit for flush mounting and power supply from the rear of the base can also be installed.

This layout of knockout cable inlets allows a number of different installation possibilities, with power supply to the fixture from any side or through

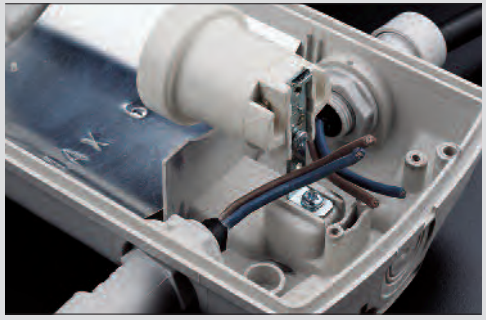

cabling in and out when several fixtures need to be supplied in parallel.

FIXING

MIZAR Series light-fittings are fitted with a slot on the rear of the base for hooking onto a nail, screw or hook, or for fastening to poles, pipes, bars or scaffolding using one or two cable ties. For permanent installation, the fixtures can be wall or ceiling mounted using screw anchors.

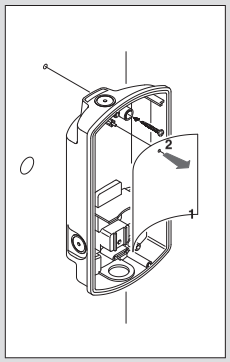

CORRECT INSTALLATION

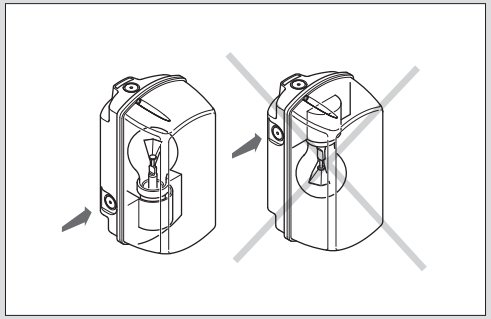

Overheating may affect the life of the lamp-holder and of the cables. To avoid this the lamp must be upright when mounting the fixture vertically, ie the lampholder must be in the lower part of the fixture. This also guarantees the protection degree.

An isolating screen provides total insulation, and by segregating the cabling protects the operator against contact with live parts when replacing the lamp.

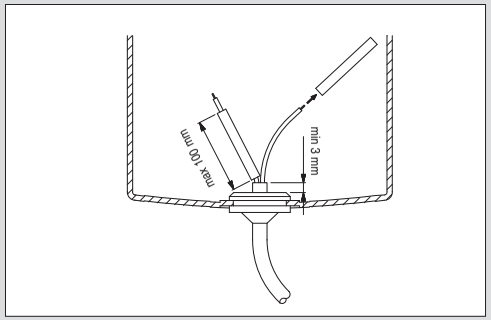

The mounting kit included in the supply comes with heat resistant sleeving for protecting the power supply cables from the heat generated by the lamp when in use.

A fast mounting plate for maintaining the protection degree is provided with the IP55 version.

INTERLOCKED SWITCH SOCKET OUTLETS

VERSIONS

Surface mounting
Without fuse carrier

Surface mounting
With fuse carrier

Flush mounting
Without fuse carrier

Flush mounting
With fuse carrier

REFERENCE STANDARDS

EN 60309-1
Plugs, socket outlets and couplers for industrial purposes.
Part 1: general requirements.

EN 60309-2
Plugs, socket outlets and couplers for industrial purposes.
Part 2: dimensional interchangeability requirements for pin and contact-tube accessories of harmonised configurations.

EN 60309-4
Plugs, socket-outlets and couplers for industrial purposes.
Part 4: switched socket-outlets and connectors with or without interlock.

QUALITY MARKS

TECHNICAL CHARACTERISTICS

Rated current:	**16A-32A-63A**
Rated voltage:	**100÷690V~**
Frequency:	**c.c. - 50÷500Hz**
Insulating voltage:	**500/690V~**
Protection degree:	**IP44-IP66/IP67**
Operating ambient temperature according to the reference standard:	**-25°C +40°C**
Max. operating ambient temperature:	**60°C**
Glow Wire test:	**650°C/850°C**
Material:	**Engineering plastic**
IK degree at 20°C:	**IK08**
Cable inlet:	**PG/METRIC**
Fuse-carriers:	**gG 10,3x38 mm**
Colour:	**Grey RAL 7035**
Insulation class:	**Class II (double insulation)** ⧈

BEHAVIOUR WITH CHEMICAL AND ATMOSPHERIC AGENTS

Saline solution	Acids		Bases		Solvents				Mineral oil	UV rays
	Concentrated	Diluted	Concentrated	Diluted	Hexane	Benzol	Acetone	Alcohol		
Resistant	Limited Resistance	Resistant	Resistant	Resistant	Not Resistant	Not Resistant	Not Resistant	Limited Resistance	Limited Resistance	Resistant

WIRING AND INSTALLATION

Wiring capacity of the terminals
Cross-section of the connectable conductors (mm²)

Rated voltage	Rated current (A)	Socket outlets	
		Min	Max
>50V	16A	1,5	4
	32A	2,5	10
	63A	6	25

APPLICATION EXAMPLES

TECHNICAL DATA SWITCH DISCONNECTORS

					with fuse		without fuse		
					16A	32A	16A	32A	63A
Rated insulation voltage **Ui**				Vac	690	690	690	690	690
				Vdc	600	600	600	600	-
Rated impulse withstand voltage **Uimp**				kV	4	4	4	4	8
Thermal current **Ith**				A	25	32	30	40	63
Thermal current **Ithe**				A	25	32	30	40	63
Corrente nominale IEC	**AC21A**	Resistive loads, including moderate overloads	400V	A	-	-	-	-	-
			500V	A	-	-	-	-	-
			690V	A	25	32	30	32	63
	AC22A	Mixed resitive and inductive loads, including moderate overloads	400V	A	-	-	-	-	-
			500V	A	-	-	-	-	-
			690V	A	30	32	20	32	63
	AC23A	Switching off motor loads or otherhighly inductive loads (3 phase / 3 pole)	400V	A	-	-	20	32	50
			500V	A	-	-	-	-	40
			690V	A	16	25	16	25	30
	AC3	Squirrel-cage motor: starting, switching off motor during running (3 phase / 3 pole)	400V	A	-	28,5	-	28,5	40
			690V	A	12	20	12	20	25
	DC21A	Resistive loads, including moderate overloads	300V	A	25	32	25	32	-
	DC22A	Mixed resitive and inductive loads, including moderate overloads	250V	A	20	32	20	32	-
			600V	A	-	-	10(*)	10(*)	-
Rated short-time withstand current. **Icw** (1s)				A	400	400	400	400	1500
Short-circuit protection	Conditional short-circuit current			kA	10	10	10	10	10
	Associate fuse size for conditional short-circuit current - Type gG		500V	kA	16	32	16	32	63
	Rated short-circuit making capacity. **Icm**			kA	1500	1500	1500	1500	2850
UL rating	General use single phase and 3 phase		600V	A	20	30	32	40	63
	AC motor starting break all line single phase		120V	Hp	1,5	2	1,5	2	3
			240V	Hp	3	5	3	5	7,5
	AC motor B, C, D starting break all lines three phase		240V	Hp	7,5	10	7,5	10	10
			480V	Hp	10	15	10	15	20
			600V	Hp	15	20	15	20	25
Permissible wire gauge	Flexible wire			mm^2	1.5-10	1.5-10	1.5-10	1.5-10	10-35
				AWG	16-8	16-8	16-8	16-8	10-2
	Rigid wire			mm^2	1.5-16	1.5-16	1.5-16	1.5-16	10-35
				AWG	16-8	16-8	16-8	16-8	10-2

(*) 2+2 poles in series

IMQ approved UL approved

APPLICATION EXAMPLES

INTERLOCKED SWITCH SOCKET OUTLETS

VERSIONS

Flush mounting
- with transformer
- without transformer

Surface mounting
- without transformer

REFERENCE STANDARDS

EN 60309-1
Plugs, socket outlets and couplers for industrial purposes.
Part 1: general requirements.

EN 60309-2
Plugs, socket outlets and couplers for industrial purposes.
Part 2: dimensional interchangeability requirements for pin and contact-tube accessories of harmonised configurations.

QUALITY MARKS

TECHNICAL CHARACTERISTICS

Rated current:	**16A-32A**
Rated voltage:	**20÷50V~**
Frequency:	**c.c. - 50÷60Hz**
SELV transformer 220/24V:	**150VA**
Insulating voltage:	**500/690V~**
Protection degree:	**IP44-IP66/IP67**
Operating ambient temperature according to the reference standard:	**-25°C +40°C**
Max. operating ambient temperature:	**60°C**
Glow Wire test:	**650°C (housing)** **850°C (contact carrier)**
Material:	**Engineering plastic**
IK degree at 20°C:	**IK07 - IK08**
Cable inlet:	**PG/METRIC**
Fuse-carriers:	**gG 10,3x38 mm**
Colour:	**Grey RAL 7035**
Insulation class:	**Class III**

BEHAVIOUR WITH CHEMICAL AND ATMOSPHERIC AGENTS

Saline solution	Acids		Bases		Solvents				Mineral oil	UV rays
	Concentrated	Diluted	Concentrated	Diluted	Hexane	Benzol	Acetone	Alcohol		
Resistant	Limited Resistance	Resistant	Resistant	Resistant	Not Resistant	Not Resistant	Not Resistant	Limited Resistance	Limited Resistance	Resistant

WIRING AND INSTALLATION

Wiring capacity of the terminals
Cross-section of the connectable conductors (mm²)

Rated current (A)	Socket outlets	
	Min	Max
16A	4	10
32A	4	10

APPLICATION EXAMPLES

FLUSH AND SURFACE MOUNTING MODULAR SYSTEM

VERSIONS

Consumer unit assembly kit - IP55

Plates - IP55

Protection cover - IP20

Flush mounting box

Frame - IP55

Coupling insert

Surface mounting box - IP67

Surface mounting system

REFERENCE STANDARDS

EN 60670-1
General requirements for enclosures for accessories for household and similar fixed electrical installations.
Part 2: general requirements.

CEI 23-49
Enclosures for accessories for household and similar fixed electrical installations.
Part 2: detailed requirements for enclosures for containing protective devices and appliances hat under ordinary use dissipate significant energy.

QUALITY MARKS

TECHNICAL CHARACTERISTICS

Protection degree:	**IP44-IP55-IP66**
Operating ambient temperature according to the reference standard:	**-25°C +35°C**
Max. operating ambient temperature:	**60°C**
Glow Wire test:	**650°C/850°C**
Material:	**Engineering plastic**
IK degree at 20°C:	**IK08**
Cable inlet:	**PG/METRIC**
Colour:	**Grey RAL 7035**
Insulation class:	**Class II (double insulation)** ⧈

BEHAVIOUR WITH CHEMICAL AND ATMOSPHERIC AGENTS

Saline solution	Acids		Bases		Solvents				Mineral oil	UV rays
	Concentrated	Diluted	Concentrated	Diluted	Hexane	Benzol	Acetone	Alcohol		
Resistant	Limited Resistance	Resistant	Limited Resistance	Resistant	Not Resistant	Not Resistant	Not Resistant	Limited Resistance	Limited Resistance	Resistant

APPLICATION EXAMPLES

Example of a flush mounting combination: consumer unit, junction box and OMNIA Series interlocked-switch socket outlet. IP55 weatherproof.

Example of a surface mounting combination: consumer unit and OMNIA Series interlocked-switch socket outlet. IP55 weatherproof.

Surface mounting system. Consumer unit 6 DIN system version with OMNIA Series interlocked-switch socket outlet with fuse carrier.

Surface mounting system. Blank plate system with OMNIA Series interlocked-switch outlet without fuse carrier.

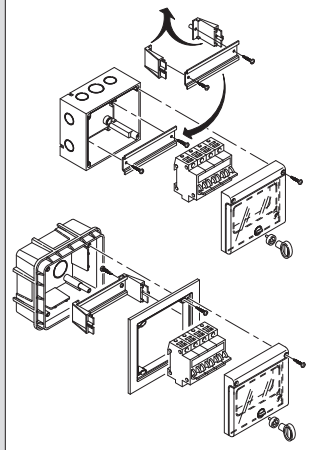

Consumer unit with DIN window.
Flush or surface mounting installation.

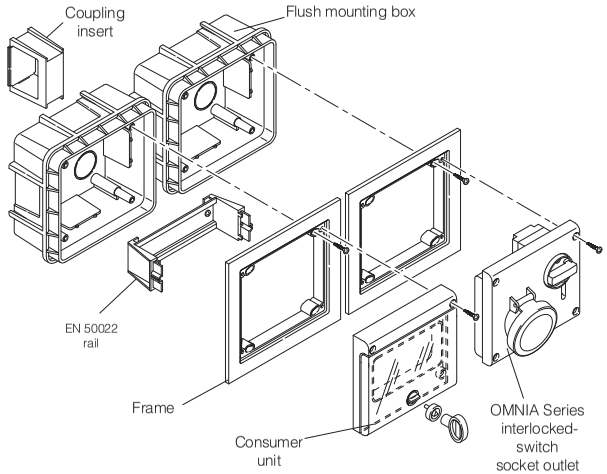

SURFACE MOUNTING INSTALLATIONS

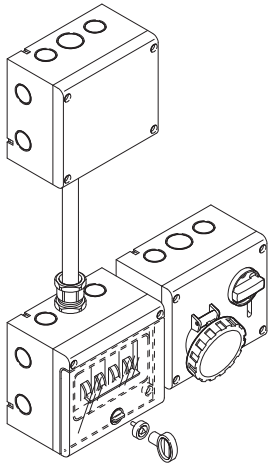

FLUSH MOUNTING INSTALLATIONS

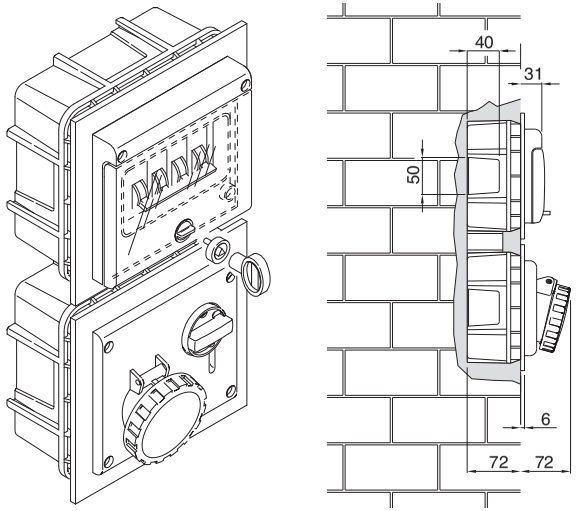

DOMESTIC INTERLOCKED SOCKET

REFERENCE STANDARDS

IEC 60884-2-6
Plugs and socket-outlets for household and similar purposes.
Part 2-6: Particular requirements for switched socket-outlets with interlock for fixed electrical installations.

BEHAVIOUR WITH CHEMICAL AND ATMOSPHERIC AGENTS

Saline solution	Acids		Bases		Solvents				Mineral oil	UV rays
	Concentrated	Diluted	Concentrated	Diluted	Hexane	Benzol	Acetone	Alcohol		
Resistant	Limited Resistance	Resistant	Resistant	Resistant	Not Resistant	Not Resistant	Not Resistant	Limited Resistance	Resistant	Resistant

VERSIONS

	Without protection
	With fuse
	MCB
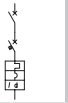	RCBO

TECHNICAL CHARACTERISTICS

Rated current:	**10A-13A-16A**
Rated voltage:	**250 Vac**
Frequency:	**50 Hz**
Insulating voltage:	**250 Vac**
Fuse:	**10A - 250V~**
MCB:	**16A - 1P+N, C16, 3kA** **10A - 1P+N, C10, 3kA**
RCBO:	**16A - 1P+N, C16, 10mA, 3kA** **10A - 1P+N, C10, 10mA, 3kA**
Protection degree:	**IP56**
Operating ambient temperature according to the reference standard:	**-15°C +35°C**
Maximum operating ambient temperature:	**60°C**
Glow Wire test:	**650°C/850°C** **(Contact-holder base)**
Material:	**Engineering plastic**
IK Degree at 20°C:	**IK08**
Colour:	**BASE: Grey RAL 7035** **COVER: tinted transparent**

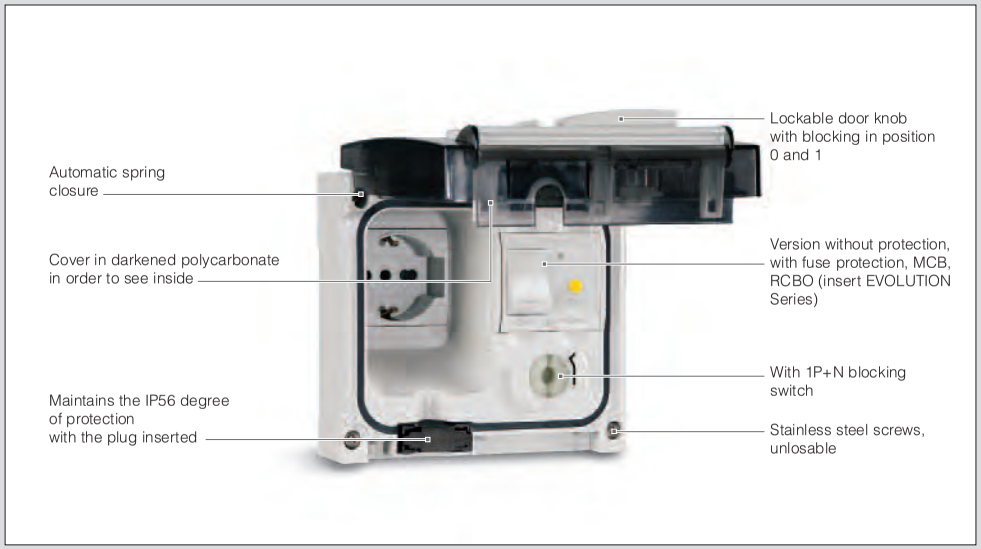

AVAILABLE STANDARDS

ITALIAN STANDARD P30 - 16A
Shuttered socket
CEI 23-50

PLURISTANDARD P40 - 16A
Shuttered socket
CEI 23-50

GERMAN STANDARD 16A
Shuttered socket
DIN VDE 0620

FRENCH STANDARD 16A
Shuttered socket
NFC 61-314

ITALIAN STANDARD P17/11 - 16A
Shuttered socket
CEI 23-50

ARGENTINIAN STANDARD - 10A
Unshuttered socket
IRAM 2071

BRITISH STANDARD - 13A
Shuttered socket
BS 1363-2

NEW ZEALAND STANDARD - 10A
Unshuttered socket
AS/N25 3112

SWISS STANDARD - 10A
Unshuttered socket
SEV 1011:1998

SOUTH AFRICAN STANDARD - 16A
Shuttered socket
SANS 164:1 (2006)

INDIAN STANDARD - 6/16A
Shuttered socket
IS 1293:1988

APPLICATION EXAMPLES

MBOX Series

OMNIA Series

ADVANCE Series

DOMINO Series

INDUSTRIAL PLUGS AND SOCKETS

VERSIONS

Plugs

Connectors

Appliance inlets

Flush mounting socket outlets

Surface mounting socket outlets

REFERENCE STANDARDS

EN 60309-1
Plugs, socket-outlets and couplers for industrial purposes.
Part 1: general requirements.

EN 60309-2
Plugs, socket-outlets and couplers for industrial purposes.
Part 2: dimensional interchangeability requirements for pin and contact-tube accessories.

QUALITY MARKS

03

TECHNICAL CHARACTERISTICS

Rated current:	**16A-32A-63A-125A**
Rated voltage:	**100÷690V~**
Frequency:	**d.c - 50÷500Hz**
Insulating voltage:	**500/690V~**
Protection degree:	**IP44/IP54 - IP66/IP67/IP69**
Operating ambient temperature according to the reference standard:	**-25°C +40°C**
Max operating ambient temperature:	**60°C**
Glow Wire test:	**650°C/850°C**
Material:	**Engineering plastic**
IK degree at 20°C:	**IK08**
Cable inlets:	**Cable gland**
Halogen free:	**Yes**
Terminals:	**Screw (16A-32A-63A-125A) Insulation perforating (16A) Spring (32A mobile) Spring (16A-32A flush/surface mounting) Mantle (63A-125A)**
Safe-in device:	**16A**
Snap-on device:	**16A-32A**
Nickel-plated pins:	**16A-32A-63A-125A**

NICKEL-PLATED PINS

Nickel-plated brass pins to guarantee long-lasting efficiency of the electrical contact.

BEHAVIOUR WITH CHEMICAL AND ATMOSPHERIC AGENTS

Saline solution	Acids		Bases		Solvents				Mineral oil	UV rays
	Concentrated	Diluted	Concentrated	Diluted	Hexane	Benzol	Acetone	Alcohol		
Resistant	Limited Resistance	Resistant	Resistant	Resistant	Not Resistant	Not Resistant	Not Resistant	Limited Resistance	Limited Resistance	Limited Resistance

WIRING AND INSTALLATION

Wiring capacity of the terminals (mm²)

Rated voltage	Rated current (A)	Plugs, connectors and appliance inlets		Socket outlets	
		Min	Max	Min	Max
Over 50V	16A	1	2,5	1,5	4
	32A	2,5	6	2,5	10
	63A	6	16	6	25
	125A	16	50	25	70

Max. cable size accepted by the cable clamp:

Rated current (A)	Outside Ø mm	
	Min	Max
16A	8	15
32A	11,5	21
63A	17	31
125A	26	48

APPLICATION EXAMPLES

On the 16A and 32A "Snap-on" device with stainless steel spring to guarantee frequent opening/closing (possibility to inspect the terminals).

External cable stay with tulip clamping having IP66/IP67/IP69 cable gland functions (the device is used on both IP44/IP54 and IP66/IP67/IP69 products).

16A plugs and connectors with insulation perforating terminals which allow wiring without stripping the conductor.

Insulation piercing terminal made in highly elastic phosphor bronze.

Internal profile of the handle which avoids the accidental opening of the contact.

Socket/plug module with screw terminals (16A - 32A - 63A - 125A).

32A plugs and connectors with screwless spring terminal.
Requires cable stripping, but not the tightening of the screws.

16-32A plugs, flush mounting sockets and surface mounting sockets with spring terminals.

EXTRACTION FORCES

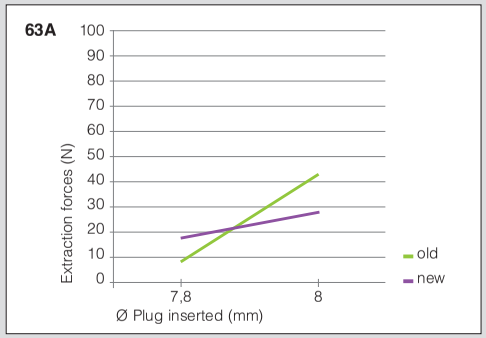

The reduction in plug-socket insertion and extraction forces was obtained thanks to the study of a new compression spring of the socket contact. As illustrated in this graph, the reduction in the force was an average of 30% compared to the previous versions, in any event guaranteeing low contact resistance.

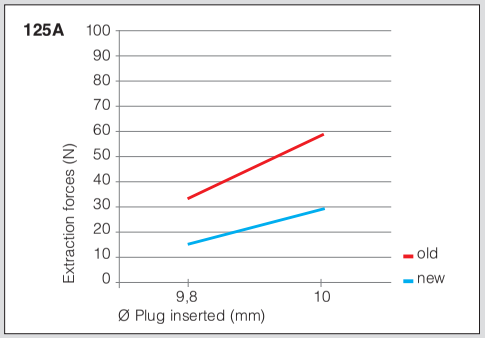

The materials of the pin and contact tube have different surface hardness so as to eliminate, during insertion and extraction operations, the layer of oxide that forms on the surface, thus improving contact smoothness and resistance while keeping them unchanged over time.

The axial incisions and the new compression spring of the socket contact with elasticity coefficient such as to keep insertion and extraction forces constant.

The nickel-plating of the socket contact combined with the special drawing and polishing process increase smoothness and ensure a higher number of contact points.

Thanks to their characteristic geometry, the new mantle terminals are suited to all types of conductors and terminals. They increase cable accessibility and contact surface, thus allowing higher tightening torques to benefit contact resistance and seal.

All gaskets are moulded directly on the cover and at the coupling point with the grip.
Grip closing is by means of metric screws and metal inserts, making tightening easier and allowing for unlimited inspections and closings.

Contact holder in special technopolymer with fibreglass, featuring high heat resistance. Pilot contacts available as standard equipment on both plugs and sockets.

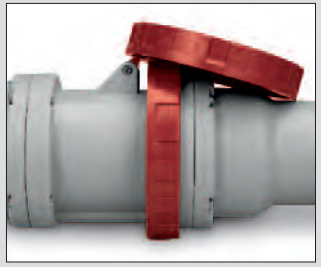

Entirely made with halogen-free materials, with excellent mechanical resistance to impacts, chemical substances and UV rays.

THE “SAFE-IN” SAFETY DEVICE

The “**SAFE-IN**” safety device assembled on the 16A industrial sockets is the most innovative element of the new OPTIMA Series. The “**SAFE-IN**” device works like the protection installed on household sockets, i.e., by means of an appropriate shutter, it closes the input of the socket contact tubes and prevents accidental and voluntary contact of live parts of the socket with slim objects, such as screwdrivers or wires.
This protection offers an additional safety guarantee, in addition to that already provided by the spring-loaded cover assembled on the mobile sockets.

SAFETY LEVEL OF THE OPTIMA SERIES SOCKETS

The OPTIMA Series sockets with the “SAFE-IN” safety device guarantee a higher level of safety in comparison with ordinary industrial sockets, especially in environments where there may be children present or people who have not been trained about electrical dangers (public areas, amusement parks, campgrounds, open markets, etc.).
Dangerous situations, such as the important examples illustrated in the figure to the side, can be resolved thanks to the new OPTIMA Series sockets equipped with the “**SAFE-IN**” safety device.

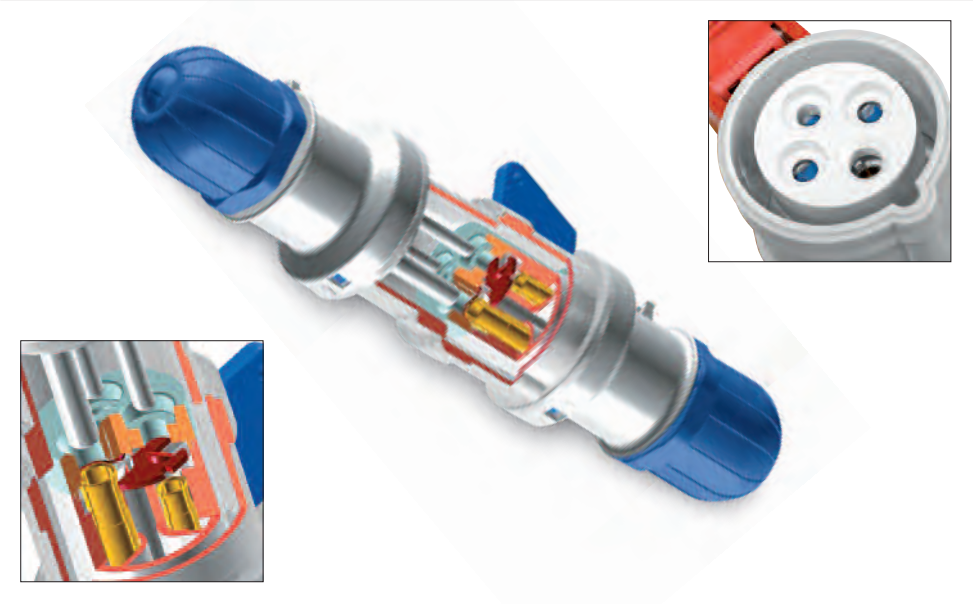

Connector tube protective shutter for greater safety against direct contacts. (The SAFE-IN safety device).

APPLICATION EXAMPLES

POTENTIALLY DANGEROUS SITUATIONS

INDUSTRIAL SURFACE MOUNTING SOCKET OUTLETS

VERSIONS

BASE version

TOP version
(with or without switch)

COMBI version
(with or without switch)

SURFACE MOUNTING INSTALLATION AXIS

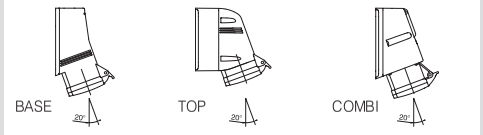

REFERENCE STANDARDS

EN 60309-1
Plugs, socket-outlets and couplers
for industrial purposes.
Part 1: general requirements.

EN 60309-2
Plugs, socket-outlets and couplers for industrial purposes.
Part 2: dimensional interchangeability requirements for pin and contact-tube accessories.

QUALITY MARKS

03

TECHNICAL CHARACTERISTICS

Rated current:	**16A-32A-63A-125A**
Rated voltage:	**100÷690V~**
Frequency:	**d.c - 50÷500Hz**
Insulating voltage:	**500/690V~**
Protection degree:	**Base: IP44/IP54** **Top: IP44 - IP66/IP67/IP69** **COMBI: IP44/IP54 closed cover**
Operating ambient temperature according to the reference standard:	**-25°C +40°C**
Max operating ambient temperature:	**60°C**
Glow Wire test:	**650°C (housing)** **850°C (contact carrier)**
Material:	**Engineering plastic**
IK degree at 20°C:	**IK08**
Cable inlets:	**Cable sleeve IP44/IP54** **Cable gland IP66/IP67/IP69**
Halogen free:	**Yes**
Terminals:	**Screw (16A-32A) Spring (32A)** **Mantle (16A-125A)**
Safe-in device:	**16A**
Fuses: (COMBI version)	**Max 10A - 5x20mm** **H: high power cutoff (1500A)** **T: delayed action**

BEHAVIOUR WITH CHEMICAL AND ATMOSPHERIC AGENTS

Saline solution	Acids		Bases		Solvents				Mineral oil	UV rays
	Concentrated	Diluted	Concentrated	Diluted	Hexane	Benzol	Acetone	Alcohol		
Resistant	Limited Resistance	Resistant	Resistant	Resistant	Not Resistant	Not Resistant	Not Resistant	Limited Resistance	Limited Resistance	Limited Resistance

Fastening to exterior wall.

TOP version: threaded knockout hole inlets, version IP66/IP67/IP69, for quick fastening of the cable entry device. IP44 versions supplied with cable gland.

16-32A Surface mounting sockets with spring terminals.

TOP version: ability to create entry-exit.

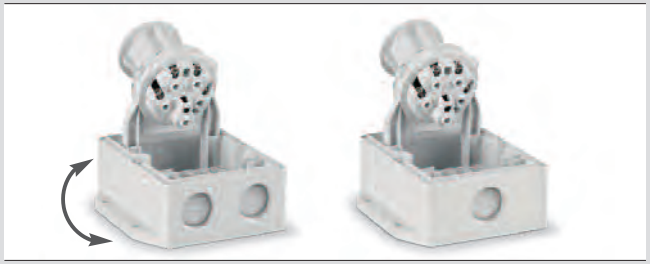

TOP version: reversible base and removable socket for easy wiring.

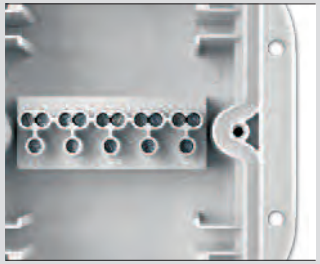

TOP IP66/IP67/IP69 version: integrated, one-piece gasket, fastening screws outside the gasket.

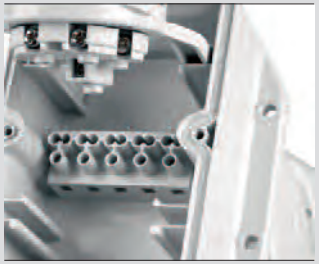

TOP version:
entry-exit terminal board accessory.

TOP version: versions with SAFE-IN (16A) safety device available.

COMBI version: combined versions, industrial and household socket.

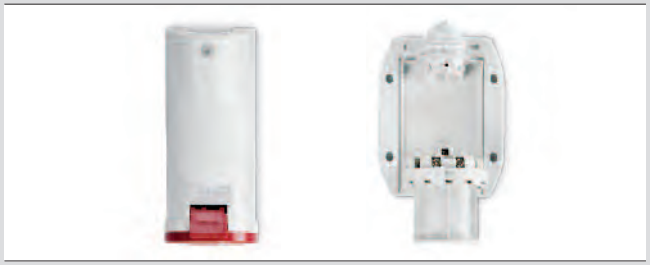

BASE version: simplified wiring. Socket fixed to the base, open terminals orientated in the same direction and easily accessible.

OPTIMA-HD Series

PLUGS AND CONNECTORS FOR DEMANDING APPLICATIONS

OUTSTANDING HEAT AND FIRE RESISTANCE
The technopolymer used for OPTIMA-HD guarantees an excellent heat and fire resistance: Glow Wire 960°C according to EN 60695-2-1; 5VA according to UL94.

OUTSTANDING IMPACT RESISTANCE
This material guarantees an excellent mechanical resistance to impacts. The impact resistance of the casings is higher than 20J (IK10) according to EN50102, even under limit temperature conditions (-40°C +60°C).

RESISTANCE TO ATMOSPHERIC AGENTS
The structure and materials used also make OPTIMA-HD a product suited for the most extreme environmental conditions. The special silicon gasket and the IP67 degree guarantees an excellent seal against the entry of solid objects or liquids into the casings even after a long term installation, and an outstanding resistance against UV radiation.

REFERENCE STANDARDS

EN 60309-1
Plugs, socket-outlets and couplers for industrial purposes.
Part 1: general requirements.

EN 60309-2
Plugs, socket-outlets and couplers for industrial purposes.
Part 2: dimensional interchangeability requirements for pin and contact-tube accessories.

TECHNICAL CHARACTERISTICS

Rated current:	**16A-32A-63A-125A**
Rated voltage:	**48÷440V~**
Frequency:	**50÷60Hz**
Insulating voltage:	**500/690V~**
Protection degree:	**IP66/IP67/IP69**
Operating ambient temperature according to the reference standard:	**-25°C +40°C**
Max operating ambient temperature:	**-40°C +60°C**
Glow Wire test:	**960°C**
Self extinguishing UL94:	**5VA**
Material:	**Thermoplastic**
IK degree:	**IK10**
Terminals:	**Screw**
Snap-on:	**16A-32A**
Nickel plated pins:	**16A-32A-63A-125A**

APPLICATION EXAMPLES

BEHAVIOUR WITH CHEMICAL AND ATMOSPHERIC AGENTS

Saline solution	Acids		Bases		Solvents				Mineral oil	UV rays
	Concentrated	Diluted	Concentrated	Diluted	Hexane	Benzol	Acetone	Alcohol		
Resistant	Limited Resistance	Resistant	Resistant	Resistant	Not Resistant	Not Resistant	Not Resistant	Limited Resistance	Resistant	Limited Resistance

ASSISTED CONNECTORS

REFERENCE STANDARDS

EN 60309-1
Plugs, socket outlets and couplers for industrial purposes.
Part 1: General requirements

EN 60529
Degrees of protection provided by enclosure.

HDAL TYPE VERSIONS

	Socket
	Plug
	Connector
	Reversed socket AVAILABLE ON REQUEST
	Reversed plug AVAILABLE ON REQUEST

HDAS TYPE VERSIONS

	Socket
	Straight plug
	Appliance inlet
	Connector

MECHANICAL CHARACTERISTICS

Protection degree:	**IP67**
Casings:	**Corrosion proof tempered cast aluminium**
Fastenings:	**Stainless steel**
Ambient temperature range:	**-30°C / +60°C**
Mechanical shocks withstand:	**IK10**

LIST OF MATERIAL USED

Casings:	**Corrosion proof tempered cast aluminium**
Inserts:	**Thermo-hardening moulded plastic**
Contacts:	**Silver plated copper alloy**
Screws and fastenings:	**Stainless steel**
Seals:	**Neoprene**

CABLE CONNECTION

Back terminals dimensions

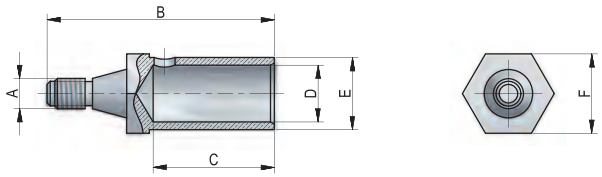

Section (mm²)		HDAL250 / HDAS250						HDAL500 / HDAS500						HDAL800 / HDAS800					
		A	B	C	D	E	F	A	B	C	D	E	F	A	B	C	D	E	F
50	3P+E 4P+E	M5 M5	50 50	29 24	Ø10,8 Ø10,8	Ø14 Ø14	17 14	M8	52	24	Ø10,8	Ø14	21						
70	3P+E 4P+E	M5 M5	50 52	29 29	Ø13 Ø13	Ø17 Ø17	17 14	M8	56	29	Ø13	Ø17	21						
95	3P+E 4P+E	M5	55	30	Ø15	Ø19	17	M8	60	32	Ø15	Ø19	21						
120	3P+E 4P+E							M8	64	35	Ø16,5	Ø21	21						
150	3P+E 4P+E							M8	64	35	Ø18,5	Ø22,5	21						
185	3P+E 4P+E							M8	62	32	Ø21	Ø25	21						
240	3P+E 4P+E							M8	76	43	Ø23	Ø28	21	M10	74	43	Ø23	Ø28	28
300	3P+E 4P+E													M10	80	49	Ø27	Ø33	28

MAXIMUM CONDUCTOR AND CABLE SIZES

	Cable outside diameter (mm)		A Sheathing stripping lengh (mm)		B Insulation stripping lengh (mm)	
	min	max	Phases	⏚		
HDAL250 / HDAS250 (60°)	32	60	110	150	(see table page 7, mark C)	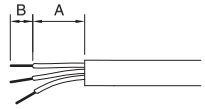
HDAL500 / HDAS500 (ANGLED HANDLE)	45	80	160	220		
HDAL500 / HDAS500 (STRAIGHT HANDLE)	45	80	200	210		
HDAL800 / HDAS800	52	100	145	145		

CRIMPING INSTRUCTIONS

Insert the cable into the cable terminal and crimp the cable using a hexagonal crimping tool with the jaw adapted to the cable section.

Thread the cable terminal into the male or female contacts and tighten by a wrench torque using the tightening torque (see table on the side)

OPTIMA-METAL HDAL250: 4Nm
OPTIMA-METAL HDAL500: 20Nm
OPTIMA-METAL HDAL800: 25Nm

LOCKINGS

HDAL type can be equipped with different type of lockings avoiding use of the connectors by people not allowed.
Available an additional satty key.

MICROSWITCH

HDAL250, HDAL500 and HDAL800 sockets can be equipped with a microswitch for information transmission.

CONTACTS

Contacts are built in 2 parts:
- One front part, male or female used for the connection between plug and socket (contact)
- One back part, called the terminal, in which the cable is crimped, screwed or soldered. It is ended by a threaded cone to screw into the contact.

HDAL type
HDAL sockets are equipped with insertion-withdrawal lever system which provides simple and quick mating and unmating operations and IP67 coupling.
It is recommended for application which require frequent coupling or in presence of strong vibrations.
When plug is not inserted, insertion-withdrawal lever provide automatic closing of socket lid to seal socket and provide IP67 protection when it is not in use.

HDAL ANGLED PLUG

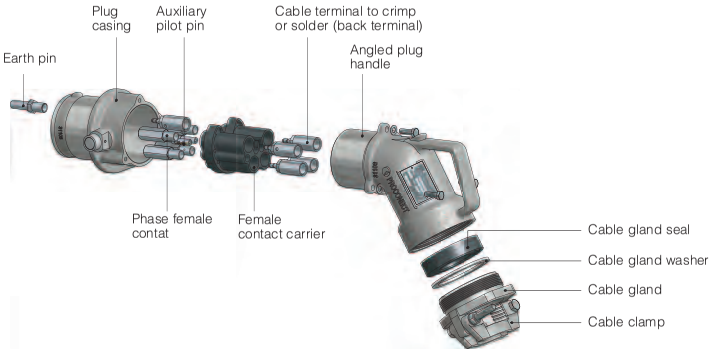

HDAL SOCKET

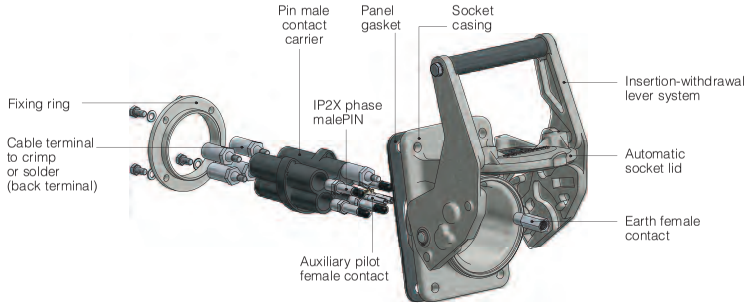

Multipoint contacts
SCAME power connector contacts are silver-plated self cleaning and make use of a special technique using lamellar technology with multicontacts.
This technology guarantees a great number of connections points (see table), excellent temperature resistance (up to 200 °C) and low insertion force.

	Amperage	Voltage	Nb contacts	Nb pilots	Section	Diam. Cable
	Max.	up to	Max.	Max.	Max.	Max.
HDAL250/ HDAS250	250A	1.000V	5	2	95 mm²	60 mm
HDAL500/ HDAS500	570A	1.000V	5	2	240 mm²	80 mm
HDAL800/ HDAS800	800A	1.000V	5	2	300 mm²	100 mm

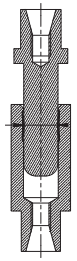

Diam. (mm)	Nb lamelles	Amp.
10	21	250
12	22	320
14	29	400
16	33	500
18	37	640
20	41	800

HDAS type
HDAS plugs and sockets are mated and unmated by means of screw collar on plugs and collar ring on sockets giving secure IP67 coupling.
Screw socket lid is supplied as standard on sockets and connectors to provide IP67 protection when they are not in use.

HDAS PLUG

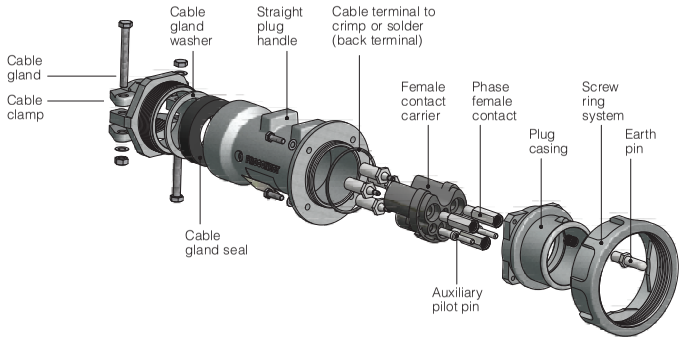

HDAS SOCKET

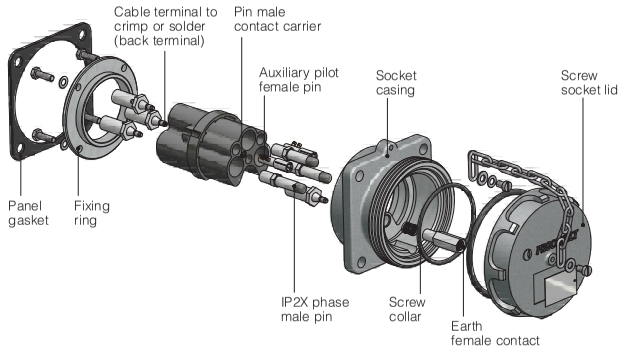

IP2X CONTACTS FOR HDAL250 / HDAL500 / HDIN250 / HDAS250 / HDAS500

Male contacts
Supplying connectors (generally sockets and connectors) are intended the contacts that supply the voltage, they are fitted with insulated cap that guarantee IP2X (Finger protection), this protection is not available for HDAL800 and HDAS800. Male contact pins are supplied with cable terminal in which the cable is crimped or soldered.

Female contacts
Receiving connectors (generally plugs and appliance inlets) are intended the contacts that receive the voltage, they are fitted with the slotted sleeve of female contacts. They are supplied with cable terminal in which the cable is crimped or soldered.

Pilot pins
All standard products are equipped with 2 pilot pins. Their characteristics of connecting later and disconnecting earlier than phase pins is for making electrical interlock insuring that no connection and disconnection occour under load.

OPTIMA-METAL Series
HDIN250 Interlocked socket

INTERLOCKED SOCKET

SCAME OPTIMA-METAL Series can also be delivered with mechanical and electrical interlocked socket with housing of polyester powder coating metal sheet enclosure.

Mechanical interlocked socket are provided with a wide range of switches and protection devices as: switch disconnector, fuse switch disconnector, MCCB (Molded case Circuit Breaker) and MCCB with RCD (Residual Current Device).

The interlock mechanism prevents making and breaking of power under load.

"The switch cannot be actuated to the ON position until a compatible plug is fully inserted, and the plug cannot be removed until the switch is in the OFF position".

Switched socket with interlock HDIN can be mated only with HDAL250 plugs.

REFERENCE STANDARDS

EN 60309-1
Plugs, socket outlets and couplers for industrial purposes.
Part 1: General requirements.

EN 60309-4
Plugs, socket outlets and couplers for industrial purposes.
Part 4: Switched socket-outlets and connectors with or without interlock.

CONNECTOR CHARACTERISTICS

- OPTIMA-METAL Series HDIN250 Switch Sockets (mechanical interlock):
  3P+E 250 A 400-690 V
  3P+N+ E 250 A 400-690 V
- OPTIMA-METAL Series HDIN250 Fuse switch sockets (mechanical interlock):
  3P+E 250 A 400-690 V (Icv: 50 kA - 400V)
  3P+N+ E 250 A 400-690 V (Icv: 50 kA - 400V)
- OPTIMA-METAL Series HDIN250 With MCCB (electrical interlock):
  3P+E 250 A 400-690 V (Icv: 50 kA - 400V)
  3P+N+ E 250 A 400-690 V (Icv: 50 kA - 400V)
- OPTIMA-METAL Series HDIN250 With MCCB plus RCD (electrical interlock):
  3P+E 250 A 400-690 V (Icv: 50 kA - 400V)
  3P+N+ E 250 A 400-690 V (Icv: 50 kA - 400V)

APPLICATION EXAMPLES

TECHNICAL DATA RATING SWITCH DISCONNECTORS 3P AND 3P+N 250A

Rated current			(A)	25
Rated insulation voltage			(V)	1000
Impulse withstand voltage			(kV)	12
Rated thermal current			(A)	250
Rated operational current	AC21A	415V	(A)	250
		500V	(A)	250
		690V	(A)	250
	AC22A	415V	(A)	250
		500V	(A)	250
		690V	(A)	250
	AC23A	415V	(A)	250
		500V	(A)	200
		690V	(A)	160
Rated making capacity			(A)	2500
Rated breaking capacity			(A)	2000
Short circuit withstand current 1 sec.			(kA)	8
Short circuit withstand current 0.25 sec.			(kA)	16
Short circuit making capacity			(kA)	13.5
Rated operational power			(kW)	130
Rated fuse short-circuit current	Back up fuse		(A)	250
	R.M.S. value		(kA)	50
	Peak value		(kA)	25
	Cable section		mm^2	120
	Bars dimension		mm^2	20x5

ENCLOSURE TECHNICAL CHARACTERISTICS

Polarity:	**3P-3P+N**
Rated current:	**250A**
Protection degree:	**IP65**
Operating ambient temperature according to the reference standard:	**-5°C / +40°C**
Mix-Max. operating ambient temperature:	**-25°C +60°C**
Material:	**Sheet steel**
IK degree:	**IK10**
Finishing/colour:	**Polyester powder grey RAL7032**

3P+N with late break early make neutral pole.
Padlockable handle.
Equipped with door locking.

WIRING OPERATIONS

Wiring capacity of the terminals (mm^2):

Type	min.	max
Switch	70	185
Fuses switch	90	120
MCCB	70	185
MCCB + RCD	70	185

OPTIMA-METAL Series
HDSD Type

SWITCHING CONNECTOR

HDSD200 plugs and sockets are equipped of an innovative system to disconnect the equipment on full load up to 200A by special contacts able to macking carrying and bracking corrent as a switch disconnector even in case of high inductive loads, like motor loads. So that connections and disconnections can be done under load in complete safty and reability.

HDSD200 plugs and sockets have also a device to avoid wrong mating between plug and socket with different amperage, voltage and number of poles as for IEC60309 plugs and sockets.
Finally a very high level of safety is guaranteed by shotter (safety disc) on the sockets or connectors which are the supplier part normally live (IP4X when lid is open).

HDSD200 range is the complete answer for management who take industrial safety seriousely and have many non-specialist personnel needing power for portable tools and equipement.

Our HDSD200 plug and sockets are moulded in high quality plastic materials which combine exceptional impact resistance, tolerance of most industrial chemicals, detergents and exposure to UV light.

REFERENCE STANDARDS

EN 60309-1
Plugs, socket outlets and couplers for industrial purposes.
Part 1: General requirements.

EN 60947-3
Low voltage switchgear and controlgear.
Part 3: switches, disconnectors, switch-disconnectors and fuse combination unit.

ELECTRICAL CHARACTERISTICS

Rated current:	**150/250A**
Max. Voltage:	**1000 V AC / 250 V DC**
Switching capacity:	**150A AC23 (acc. IEC 60 947-3) ***

* up to 150A 500V

MECHANICAL CHARACTERISTICS

Protection degree:	**IP4X when lid open** **IP66**
Housings:	**Corrosion proof cast aluminum**
Stainless steel fastenings	
Self-closing lid	
Ambient temperature range:	**- 30° C / + 60° C**
Mechanical shocks withstand:	**IK09 (metal)**

LIST OF MATERIAL USED

Size	Casing	Flat Seal	Lip seal	Insert	Latch	Contact	Handle	Wall box	Inclined sleeve	Screw	Plug cap
HDSD200	AS7G	Neopren	Nitrile	PA6	AS7G	Copper/ Silver	EPDM	AS7G	AS7G	Stainless steel	PA6

MAXIMUM CONDUCTOR AND CABLE SIZES

	Cable outside diametre (mm)		Sheathing stripping length (mm)	Insulation stripping length (mm)
	Min.	Max.		
899.SD2G	22	50	155	38
899.SD2GM	25	62	155	38
899.SD2GMA	25	62	155	38

WATERTIGHT CONNECTORS WITH SWITCHING CAPACITY

Our **HDSD200** range of connectors is extremely robust and supersedes the requests of **EN 60309-1** standards in terms of safety, insulation, temperature resistance, heating, life duration, resistance to shocks and traction on the cables.

Besides, due to the special technology of the contacts and the materials chosen, the 3PS series can be used as **SWITCHED sockets**, according to the standard **EN60947-3, AC23**.

SAFETY DISC (IP4X)

This device protects the user preventing accidental and volontary contact of live parts of the sockets and connectors even with small linear tool or wire with a diameter of 1 mm. Which corrispond to IP4X degree protection.

Conductor cross section (mm²)	
Standard	120
Flexible	95
Tightening torque	5

CONTACTS

HDSD200 connectors are fitted with butt contacts which have a brazed silver alloy tip for low voltage drop and high arc resistance. These contacts warrant an excellent behaviour of the switching function.

The contact terminal will ensure a permanent pressure on the cable due to its elastic slotted sleeve with its expansion limited by a ring. This construction is vibration proof.
All conductive parts are tin plated to prevent corrosion.

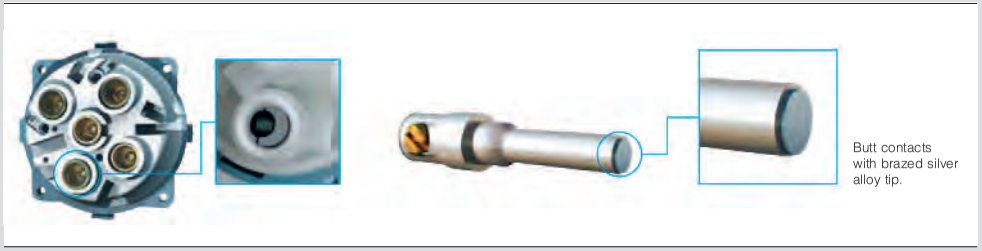

Butt contacts with brazed silver alloy tip.

PLUGS WITH PHASE INVERTER

REFERENCE STANDARDS

EN 60309-1
Plugs, socket-outlets and couplers for industrial purposes.
Part 1: general requirements.

EN 60309-2
Plugs, socket-outlets and couplers for industrial purposes.
Part 2: dimensional interchangeability requirements for pin and contact-tube accessories.

VERSIONS

Plugs

Appliance inlets

PHASE INVERTER

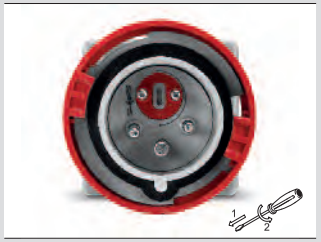

Fixed and movable plugs which rapidly invert two phases in order to return to the correct direction of rotation of three-phase motors for movable and fixed applications.

TECHNICAL CHARACTERISTICS

Rated current:	**16A-32A**
Rated voltage:	**346÷415V~**
Frequency:	**50÷60Hz**
Insulating voltage:	**690V~**
Protection degree:	**IP44/IP54 - IP66/IP67/IP69**
Operating ambient temperature according to the reference standard:	**-25°C +40°C**
Max. operating ambient temperature:	**60°C**
Glow Wire test:	**650°C (housing)** **850°C (contact carrier)**
Material:	**Engineering plastic**
IK degree at 20°C:	**IK08**
Cable inlets:	**Cable gland**
Halogen free:	**Yes**
Terminals:	**Screw**
Snap-on device:	**16A-32A**
Polarity:	**3P+E / 3P+N+E**
Connectable cables:	**Flexible class 5 or 6**

BEHAVIOUR WITH CHEMICAL AND ATMOSPHERIC AGENTS

Saline solution	Acids		Bases		Solvents				Mineral oil	UV rays
	Concentrated	Diluted	Concentrated	Diluted	Hexane	Benzol	Acetone	Alcohol		
Resistant	Limited Resistance	Resistant	Resistant	Resistant	Not Resistant	Not Resistant	Not Resistant	Limited Resistance	Limited Resistance	Limited Resistance

WIRING AND INSTALLATION

Wiring capacity of the terminals (mm²)

Rated voltage	Rated current (A)	Plugs Appliance inlets	
		Min	Max
Over 50V	16A	1	2,5
	32A	2,5	6

Max. cable size accepted by the cable clamp:

Rated current (A)	Outside Ø mm	
	Min	Max
16A	8	15
32A	11,5	21

OPERATING PRINCIPLE OF THE PHASE INVERTER

The phases are inverted by simply pushing and turning the phase pin support with a screwdriver.

INDUSTRIAL PLUGS AND SOCKETS

VERSIONS

Plugs

Connectors

Appliance inlets

Flush mounting
socket outlets

Surface mounting
socket outlets

REFERENCE STANDARDS

EN 60309-1
Plugs, socket-outlets and couplers
for industrial purposes.
Part 1: general requirements.

QUALITY MARKS

03

TECHNICAL CHARACTERISTICS

Rated current:	**16A-32A**
Rated voltage:	**100÷690V~**
Frequency:	**50÷500Hz**
Insulating voltage:	**500/690V~**
Protection degree:	**IP44 - IP66/IP67**
Operating ambient temperature according to the reference standard:	**-25°C +40°C**
Max operating ambient temperature:	**60°C**
Glow Wire test:	**650°C/850°C**
Material:	**Engineering plastic**
IK degree at 20°C:	**IK08**
Cable inlets:	**Cable gland**
Halogen free:	**Yes**
Snap-on device:	**16A-32A**
Nickel-plated pins:	**16A-32A**

APPLICATION

- Star delta connections
- Tapped winding connections
- Monitoring
- Controlling and actuation
- Electrical interlocks

BEHAVIOUR WITH CHEMICAL AND ATMOSPHERIC AGENTS

Saline solution	Acids		Bases		Solvents				Mineral oil	UV rays
	Concentrated	Diluted	Concentrated	Diluted	Hexane	Benzol	Acetone	Alcohol		
Resistant	Limited Resistance	Resistant	Resistant	Resistant	Not Resistant	Not Resistant	Not Resistant	Limited Resistance	Limited Resistance	Limited Resistance

WIRING AND INSTALLATION

Wiring capacity of the terminals (mm²)

Rated voltage	Rated current (A)	Plugs and connectors		Appliance inlets and socket outlets	
		Min	Max	Min	Max
Over 50V	16A	1	2,5	1,5	4
	32A	2,5	6	2,5	10

Max. cable size accepted by the cable clamp:

Rated current (A)	Outside Ø mm	
	Min	Max
16A	8	16
32A	11,5	22

APPLICATION EXAMPLES

CONTROL DEVICE

REFERENCE STANDARDS

EN 60669-1
Switches for household and similar fixed-electrical installation.
Part 1: general requirements.

VERSIONS

One way switch single pole
- flush mounting
- surface mounting

Two way switch single pole
- flush mounting
- surface mounting

Intermediate switch
- flush mounting
- surface mounting

Bell push switch single pole
- flush mounting
- surface mounting

Double pole switch
- flush mounting
- surface mounting

TECHNICAL CHARACTERISTICS

Rated current:	**10A-10AX-20A-20AX**
Rated voltage:	**250V~**
Frequency:	**50Hz**
Insulating voltage:	**250V~**
Protection degree:	**IP66**
Operating ambient temperature:	**-20°C +60°C**
Cabling capacity of the terminal:	**3x2,5mm²** **2x4mm²** **1x6mm²**
Glow Wire test:	**650°C/850°C**
Halogen free:	**Yes**
Material:	**Engineering plastic**
Cable inlet:	**M20**
Colour:	**Grey RAL 7035**
LED colour:	**Orange**

BEHAVIOUR WITH CHEMICAL AND ATMOSPHERIC AGENTS

Saline solution	Acids		Bases		Solvents				Mineral oil	UV rays
	Concentrated	Diluted	Concentrated	Diluted	Hexane	Benzol	Acetone	Alcohol		
Resistant	Limited Resistance	Resistant	Limited Resistance	Resistant	Resistant	Not Resistant	Not Resistant	Resistant	Limited Resistance	Resistant

UNSWITCH SOCKET OUTLETS

REFERENCE STANDARDS

CEI 23-50
Plugs and sockets for domestic and similar applications.
Part 1: general requirements.

IEC 60884-1
Plugs and socket-outlets for household and similar purposes.
Part 1: general requirements.

TECHNICAL CHARACTERISTICS

Rated current:	**10A-13A-15A-16A**
Rated voltage:	**250V~**
Frequency:	**50Hz**
Insulating voltage:	**250V~**
Protection degree:	**IP66**
Operating ambient temperature:	**-5°C +60°C**
Installation ambient temperature:	**-20°C +60°C**
Cabling capacity of the terminal:	**10A: 0,75 mmq - 2,5 mmq** **13A: 2,5 mmq - 6 mmq** **15A: 2,5 mmq - 6 mmq** **16A: 1 mmq - 2,5 mmq** **(according to ref. standard)**
Glow Wire test:	**650°C / 850°C**
Halogen Free:	**Yes**
Material:	**Engineering plastic**
Cable inlets:	**M20**
Colour:	**Base: Grey RAL 7035** **Cover: tinted transparent**

The IP66 degree of protection with the plug inserted is guaranteed mainly with angled plugs which can be coupled with the respective Standard sockets. This is the breakdown for the main Italian and European standards (Europe mainland):		Italian bivalent standard 16A P17/P11 **137.4403 137.6403**	Italian standard – 16A P30 **137.4404 137.6404**	German standard 16A **137.4412 137.6412 137.4407 137.6407**	French standard – 16A P31 **137.4411 137.6411**
Plug 10A 2P+E extra flat SPA11	Wireable (body length up to 50 mm)	•			
	Permanent (body length up to 50 mm)	•			
Plug 16A 2P+E extra flat SPA17	Wireable (body length up to 50 mm)	•			
	Permanent (body length up to 50 mm)	•			
Plug 10A 2P straight S10 "Europlug"	Wireable (body length up to 41 mm)		•	•	•
	Permanent (body length up to 50 mm)		•	•	•
Plug 10A 2P+E straight S11	Wireable (body length up to 41 mm)		•		
	Permanent (body length up to 50 mm)		•		
Plug 16A 2P+E straight S30	Wireable (body length up to 41 mm)		•	•	
	Permanent (body length up to 45 mm)		•	•	
Plug 16A angled S30	Wireable (body length up to 60 mm)		•	•	
	Permanent (body length up to 65 mm)		•	•	
Plug 16A angled S31	Wireable (body length up to 60 mm)		•	•	•
	Permanent (body length up to 65 mm)		•	•	•

ENCLOSURES

VERSIONS

	Empty 1-module enclosure - flush mounting - surface mounting
	Empty 2-module enclosure - flush mounting - surface mounting
	Pole side by side enclosure
	Pole-top enclosure
	3-module flush-mounting box adapter IP55

REFERENCE STANDARDS

EN 60670-1 (2005-10)
Boxes and enclosures for electrical accessories for household and similar fixed electrical installations.
Part 1: general requirements.

TECHNICAL CHARACTERISTICS

Protection degree:	**IP66 (*)**
Operating ambient temperature:	**-5°C +60°C**
Installation ambient temperature:	**-20°C +60°C**
Glow Wire test:	**650°C**
Halogen free:	**Si**
Material:	**Engineering plastic**
IK degree at 20°C:	**IK07**
Cable inlets:	**M20**
Colour:	**Base: grey RAL 7035** **Cover: tinted transparent**

(*) IP55 for 3-module flush-mounting box adapter flange.

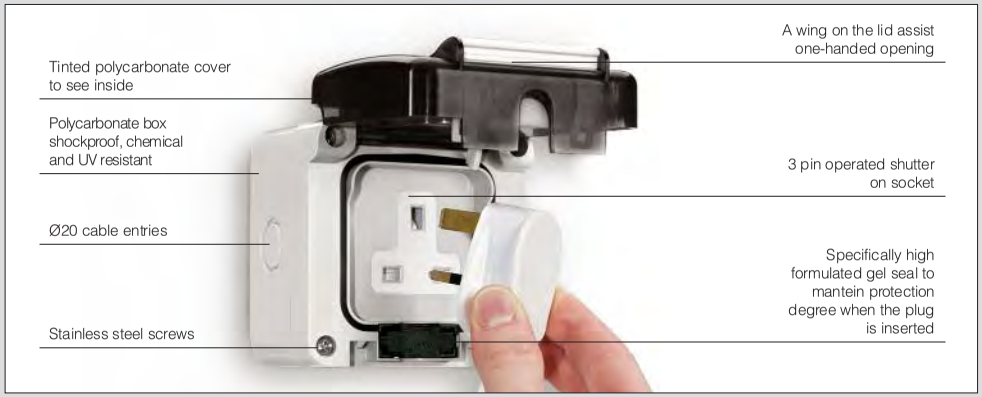

AVAILABLE STANDARDS

ITALIAN STANDARD P17/11 - 16A Shuttered socket CEI 23-50	**ITALIAN STANDARD P30 - 16A** Shuttered socket CEI 23-50	**GERMAN STANDARD - 16A** Shuttered socket DIN VDE 0620	**FRENCH STANDARD - 16A** Shuttered socket NFC 61-314	**BRITISH STANDARD - 13A** Shuttered socket BS 1363-2 BS 7288:1990
BRITISH STANDARD - 15A Shuttered socket BS 546	**ARGENTINIAN STANDARD - 10A** Unshuttered socket IRAM 2071	**NEOZELANDER STANDARD - 10A** Unshuttered socket AS/N25 3112	**SWISS STANDARD - 10A** Unshuttered socket SEV 1011:1998	**BRAZILIAN STANDARD - 10A** Unshuttered socket ABNT NBR 14136:2002

CABLE REELS FOR INDUSTRIAL, COMMERCIAL AND DOMESTIC APPLICATIONS

VERSIONS

ROLLER330 Series
- For domestic applications

ROLLER330 Series
- For industrial applications

ROLLER450 Series
- With portable stand

ROLLER-BLOCK450 Series
- With wheeled portable distribution assembly stand available

REFERENCE STANDARDS

IEC 61242
Electrical accessories
cable reels for household and similar purposes.

IEC 61316
Industrial cable reels.

QUALITY MARKS

TECHNICAL CHARACTERISTICS

Rated voltage:	**230÷400V~**
Frequency:	**50Hz**
Insulating voltage:	**500/690V~**
Protection degree:	**IP20-IP44-IP55**
Operating ambient temperature according to the reference standard:	**-25°C +40°C**
Max. operating ambient temperature:	**60°C**
Glow Wire test:	**650°C/850°C**
Material:	**Engineering plastic**
IK degree at 20°C:	**Roller 300: IK07**
	Roller 450: IK08
Cable for industrial versions:	**Type H07RN-F**
Cable for domestic versions:	**Type H05VV-F**

BEHAVIOUR WITH CHEMICAL AND ATMOSPHERIC AGENTS

Saline solution	Acids		Bases		Solvents				Mineral oil	UV rays
	Concentrated	Diluted	Concentrated	Diluted	Hexane	Benzol	Acetone	Alcohol		
Resistant	Not Resistant	Not Resistant	Limited Resistance	Resistant	Not Resistant	Not Resistant	Not Resistant	Limited Resistance	Not Resistant	Resistant

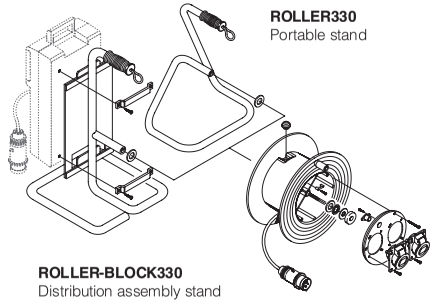

ROLLER330
Portable stand

ROLLER-BLOCK330
Distribution assembly stand

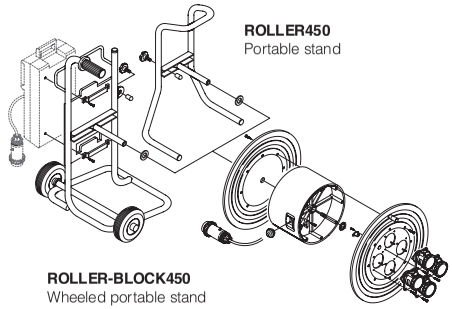

ROLLER450
Portable stand

ROLLER-BLOCK450
Wheeled portable stand

APPLICATION EXAMPLES

ROLLER330 SERIES

Shows: cable clamp, terminal strip, thermal overload switch, contactor, isolating protection pivot and elastic hook

The version with the interlocked switch socket outlet is well-suited for use in public entertainment venues.

ROLLER-BLOCK450 SERIES

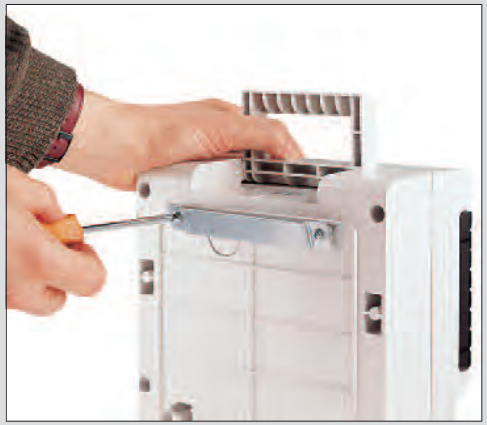

ROLLER-BLOCK450
Screwing a holding bracket onto the back of any BLOCK4 distribution assembly makes for a combined cable reel/assembly unit.

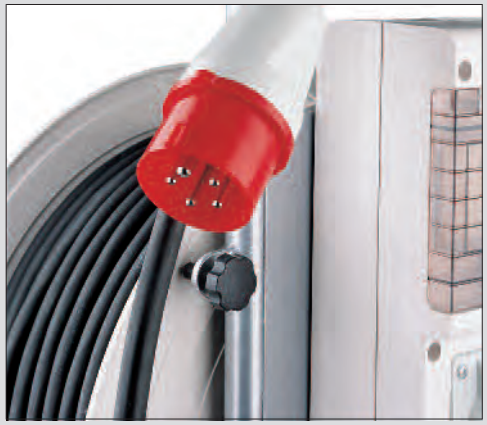

ROLLER-BLOCK450
As well as the holding plate for attaching the distribution assembly, the cable reel comes with wheels for moving the combined unit, a cable-holding bracket, an ergonomic handle and a brake for the drum.

ROLLER450 SERIES

Portable stand with integral brake. The cable reel stand is made of corrosion-proof steel and has an adjustable thumbscrew brake to avoid unnecessary overrun.

JUNCTION BOXES FOR ELECTRICAL INSTALLATION

REFERENCE STANDARDS

EN 60670-1
Boxes and enclosures for electrical accessories for household and similar fixed electrical installations.
Part 1: general requirements.

EN 60670-22
Boxes and enclosures for electrical accessories for household and similar fixed electrical installations.
Part 22: particular requirements for connecting boxes and enclosures.

QUALITY MARKS

VERSIONS

With cavle sleeves - IP55
- With press-fit cover

With cavle sleeves - IP55
- With screw-down cover

With blank sides - IP56
- With screw-down cover

With blank sides - IP56
- Higer box with screw-down cover

TECHNICAL CHARACTERISTICS

Protection degree:	**IP55-IP56**
Operating ambient temperature according to the reference standard:	**-25°C +35°C**
Max operating ambient temperature:	**60°C**
Glow wire test:	**650°C**
Material:	**Engineering plastic**
IK degree at 20°C:	**IK04 - IK08**
Insulation class:	**Class II (double insulation)** ⧈
Halogen free:	**Yes (blank sides versions)**
DIN rail fixing:	**Yes**
Colour:	**Grey RAL 7035**

BEHAVIOUR WITH CHEMICAL AND ATMOSPHERIC AGENTS

Saline solution	Acids		Bases		Solvents				Mineral oil	UV rays
	Concentrated	Diluted	Concentrated	Diluted	Hexane	Benzol	Acetone	Alcohol		
Resistant	Limited Resistance	Resistant	Limited Resistance	Resistant	Not Resistant	Not Resistant	Not Resistant	Limited Resistance	Limited Resistance	Resistant

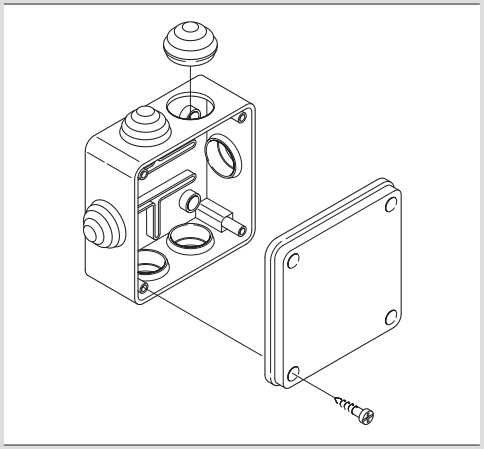

Surface mounting junction box 100x100 mm. 50 mm high box with IP55 cable sleeves. Screw-closed cover.

Wall fixing system.

HINGES KIT

An interesting novelty for the SCABOX Series, a practical hinge kit is available that permits the book-like opening of the cover while keeping it integral with the base.
The kit can be optionally applied inside the casing in a quick and simple manner; thus the SCABOX acquires greater functionality – perfect in the installation phase, during the wiring operations, and extremely practical for the subsequent phases of maintenance and inspection, since it keeps the cover supported and hinged to the base.

Pressing lightly on the small lever of the hinge, it is possible to remove the cover from the base and to thus separate the two elements.
With a simple locking manoeuvre it is possible to eventually replace the cover to the base.

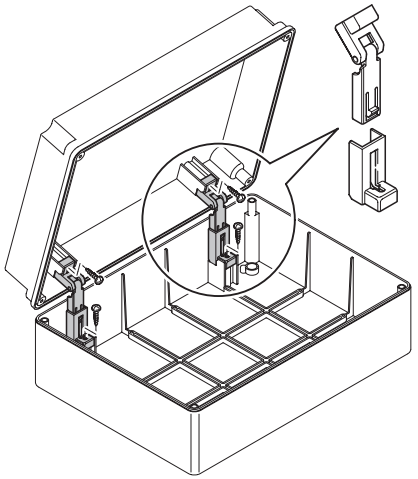

SCABOX Series
Hinges kit (3 pieces). Item 654.0085.

MULTI-OUTLET SOCKETS

VERSIONS

Multi-outlet sockets without luminous switch

Multi-outlet sockets with luminous switch

Multi-outle sockets with lighting protection

REFERENCE STANDARDS

IEC 60884-1
Plugs and socket-outlets for household and similar purposes.
Part 1: general requirements.

CEI 23-124
Plugs and socket outlets for household and similar purposes.
Part 2-7: particular requirements for cord extension set.

CEI 23-50
Plugs and sockets for domestic and similar applications.
Part 1: general requirements.

TECHNICAL CHARACTERISTICS

Rated current:	**16A**
Rated voltage:	**250V~**
Frequency:	**50Hz**
Insulating voltage:	**250V~**
Protection degree:	**IP20D**
Operating ambient temperature according to the reference standard:	**-15°C +35°C**
Max. operating ambient temperature:	**60°C**
Glow Wire test:	**750°C**
Halogen free:	**Yes**
Cabling capacity of the terminal:	**0,75÷2,5mm²**
Material:	**Engineering plastic**
Colour:	**Random (*)** **Anthracite RAL 7021** **Tinted (transparent)** **Turquoise blue (transparent)**

(*) Random colour means casual "white base – grey lid" or "grey base – white lid".

BEHAVIOUR WITH CHEMICAL AND ATMOSPHERIC AGENTS

Saline solution	Acids		Bases		Solvents				Mineral oil	UV rays
	Concentrated	Diluted	Concentrated	Diluted	Hexane	Benzol	Acetone	Alcohol		
Resistant	Limited Resistance	Resistant	Limited Resistance	Limited Resistance	Resistant	Not Resistant	Not Resistant	Resistant	Limited Resistance	Resistant

APPLICATION EXAMPLES

CONDUIT INSTALLATION ACCESSORIES

VERSIONS

90° bend

Conduit coupling

Conduit to box coupling

Conduit to box couplings (equal diameter)

REFERENCE STANDARDS

EN 61386-1
Conduit systems for cable management.
Part 1: general requirements.

EN 61386-21
Conduit systems for cable management.
Part 2: particular requirements - rigid conduit systems.

QUALITY MARKS

TECHNICAL CHARACTERISTICS

Protection degree:	**IP66/IP67**
Operating ambient temperature according to the reference standard:	**-5°C +60°C**
Max operating ambient temperature:	**60°C**
Glow wire test:	**750°C**
Halogen free:	**Yes**
IK degree at 20°C:	**IK07-IK10**
Material:	**Engineering plastic**
Colour:	**Grey RAL 7035**

BEHAVIOUR WITH CHEMICAL AND ATMOSPHERIC AGENTS

Saline solution	Acids		Bases		Solvents				Mineral oil	UV rays
	Concentrated	Diluted	Concentrated	Diluted	Hexane	Benzol	Acetone	Alcohol		
Resistant	Resistant	Resistant	Resistant	Resistant	Limited Resistance	Limited Resistance	Resistant	Resistant	Limited Resistance	Resistant

CO-INJECTION MOULDED GASKET

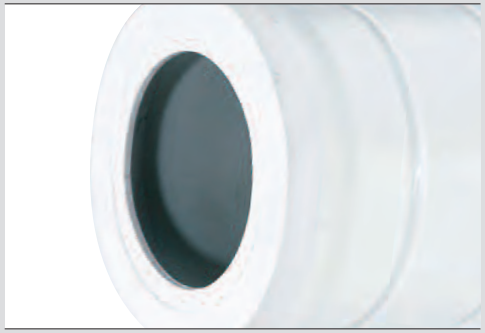

The use of a co-injection moulding system makes it possible to turn the technopolymer gasket into an extension of the piece and disguise it as part of the pipe. It also provides a greater degree of sealing efficiency and makes it easier to insert pipe fittings without squashing or deforming the gasket.

APPLICATION EXAMPLES

CABLE TIES

VERSIONS

For indoor wiring

For outdoor wiring

LOADING DIAGRAM

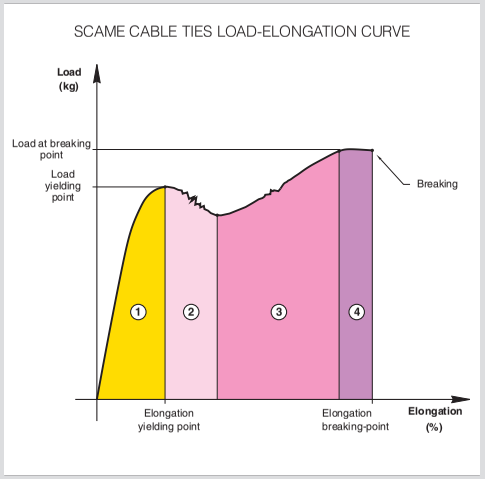

TECHNICAL CHARACTERISTICS

Operating ambient temperature:	**-40°C +85°C for indoor wiring -45°C +85°C for outdoor wiring**
Installation ambient temperature:	**-10°C +60°C for indoor wiring -30°C +60°C for outdoor wiring**
Glow Wire test:	**650°C**
Material:	**PA 6.6 (Indoor wiring) Engineering plastic (outdoor wiring)**
Colour:	**Black Natural**
IK degree at 20°C:	**IK08-IK10**

Four areas with different characteristics can be clearly identified:

1) Elastic elongation (utilization area).
   The cable tie subject to traction strength undergoes elastic elongation. Once the strength stops, it goes back to the initial state without altering its physical characteristics.
2) Stretching of molecular bonds.
   The cable tie is subject to a load such as to undergo inter-molecular breaks. The elasticity characteristics are altered.
3) Permanent deformation.
   The cable tie undergoes the breaking of all intermolecular bonds.
4) Elongation to rupture.
   Range within which the cable tie breaks.

BEHAVIOUR WITH CHEMICAL AND ATMOSPHERIC AGENTS

Saline solution	Acids		Bases		Solvents				Mineral oil	UV rays
	Concentrated	Diluted	Concentrated	Diluted	Hexane	Benzol	Acetone	Alcohol		
Resistant	Not Resistant	Not Resistant	Limited Resistance	Resistant	Resistant	Resistant	Resistant	Resistant	Resistant	Resistant

DIMENSIONS

Cable ties for indoor wiring

Dimensions (mm)	Grip capacity MIN ÷ MAX Ø (mm)	Tensile strenght (kg)
2.2x75	1.5 ÷ 15	6
2.5x98	1.5 ÷ 18	8
2.5x135	1.5 ÷ 30	8
2.5x160	1.5 ÷ 40	8
2.5x200	1.5 ÷ 50	8
3.6x140	1.5 ÷ 35	13
3.6x200	1.5 ÷ 50	13
3.6x290	1.5 ÷ 80	13
3.6x365	1,5 ÷ 100	13
4.8x180	1.5 ÷ 45	22
4.8x200	1.5 ÷ 45	22
4.8x250	1.5 ÷ 60	22
4.8x290	1.5 ÷ 75	22
4.8x360	1.5 ÷ 100	22
4.8X130	1.5 ÷ 110	22
7.6x180	4.5 ÷ 45	55
7.6x300	4.5 ÷ 80	55
7.6x365	4.5 ÷ 100	55
9x780	4.5 ÷ 230	55

Cable ties for outdoor wiring

Dimensions (mm)	Grip capacity MIN ÷ MAX Ø (mm)	Tensile strenght (kg)
6x115	4 ÷ 25	25
6x175	10 ÷ 45	28
9x120	4 ÷ 22	48
9x180	10 ÷ 42	48
9x265	30 ÷ 60	51
9x360	30 ÷ 93	51

APPLICATION EXAMPLES

CONTROL AND SIGNALLING ACCESSORIES

VERSIONS

Control stations

Push buttons

Selectors

Enbloc pilot lamp

Contact blocks

REFERENCE STANDARD

EN 60947-5-1
Low-voltage switchgear and controlgear.
Part 5-1: control circuit devices and switching elements - Electromechanical control circuit devices.

QUALITY MARKS

TECHNICAL CHARACTERISTICS

Protection degree:	**IP65**
Operating ambient temperature according to the reference standard:	**-25°C +70°C**
IK degree at 20°C:	**IK08**
Material:	**Engineering plastic**

PERFORMANCE ACCORDING TO EN 60947-5-1

Hole EN 60947-5-1

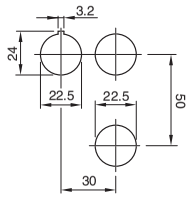

ELETRICAL RATING

Rated thermic voltage Ith: 16A - Limits of usage as IEC 60947-5-1

Cat. AC15										
Voltage	Ue	(IVI)	24	60	110	230	400	440	500	590
Current	Ie	(IAI)	16	12	8	6	4,5	3,5	3	1
Cat. DC13										
Voltage	Ue	(IVI)	24	48	60	110	220			
Current	Ie	(IAI)	2	1,2	0,85	0,4	0,25			

APPLICATION EXAMPLES

MULTI-OUTLET SOCKETS

VERSIONS

	Without luminous switch
	With luminous switch
	With lighting protection
	With USB

REFERENCE STANDARDS

CEI 23-124
Plugs and socket outlets for household and similar purposes.
Part 2-7: particular requirements for cord extension set.

QUALITY MARKS

TECHNICAL CHARACTERISTICS

Rated current:	**16A**
Rated voltage:	**250V~**
Frequency:	**50Hz**
Insulating voltage:	**250V~**
Protection degree:	**IP20D**
Operating ambient temperature according to the reference standard:	**-15°C +35°C**
Max. operating ambient temperature:	**60°C**
Glow Wire test:	**750°C**
Halogen free:	**Yes**
Material:	**Engineering plastic**
Colour:	**Random (*)** **Anthracite RAL 7021** **Turquoise blue (transparent)**

(*) Random colour means casual "white base – grey lid" or "grey base – white lid".

BEHAVIOUR WITH CHEMICAL AND ATMOSPHERIC AGENTS

Saline solution	Acids		Bases		Solvents				Mineral oil	UV rays
	Concentrated	Diluted	Concentrated	Diluted	Hexane	Benzol	Acetone	Alcohol		
Resistant	Limited Resistance	Resistant	Limited Resistance	Limited Resistance	Resistant	Not Resistant	Not Resistant	Resistant	Limited Resistance	Resistant

APPLICATION EXAMPLES

DOMESTIC CABLE REELS - ENERGY

VERSIONS

TRIS150 Series
- Italian standard plugs

TRIS190 Series
- Italian standard plugs
- French-German standard plugs

TRIS230 Series
- Italian standard plugs
- French-German standard plugs

REFERENCE STANDARDS

EN 61242
Electrical accessories cable reels for household and similar purposes.

QUALITY MARKS

TECHNICAL CHARACTERISTICS

Rated current:	**10A-16A**
Rated voltage:	**250V~**
Frequency:	**50Hz**
Insulating voltage:	**250V~**
Protection degree:	**IP20D**
Operating ambient temperature according to the reference standard:	**-5°C +40°C**
Max. operating ambient temperature:	**40°C**
Glow Wire test:	**650°C/850°C**
Material:	**Engineering plastic**
Colour:	**Petrol Blue/Orange**

PRACTICAL ADVICE

- Do not use in places where there is danger of explosion or fire.
- When in use the cable should be extended on the ground or the floor avoiding wear and tear or damage (crushing caused by heavy loads or vehicles passing over the cable for example). If necessary suitable mechanical protection should be used.
- After use rewind the cable carefully back onto the reel.
- Periodically check the condition of the cable for example (there should be no signs of wear, compression or cracks) and test the phase and earth conductors for conductivity.

BEHAVIOUR WITH CHEMICAL AND ATMOSPHERIC AGENTS

Saline solution	Acids		Bases		Solvents				Mineral oil	UV rays
	Concentrated	Diluted	Concentrated	Diluted	Hexane	Benzol	Acetone	Alcohol		
Resistant	Limited Resistance	Not Resistant	Limited Resistance	Limited Resistance	Not Resistant	Not Resistant	Not Resistant	Limited Resistance	Limited Resistance	Resistant

POWER OUTPUT

Power supply			Max load (W)		
Plug	Cable Type	Meters			Volt (V~)
10A	2X1	5	1200	2200	230
		10	110	2300	230
		15	110	2300	230
		20	110	2200	230
	3X1	5	1200	2300	230
		10	1100	2850	230
16A	3X1,5	4	1700	3200	230
		5	1200	3200	230
		10	1200	3200	230
		15	1200	3200	230
		20	1200	3200	230

APPLICATION EXAMPLES

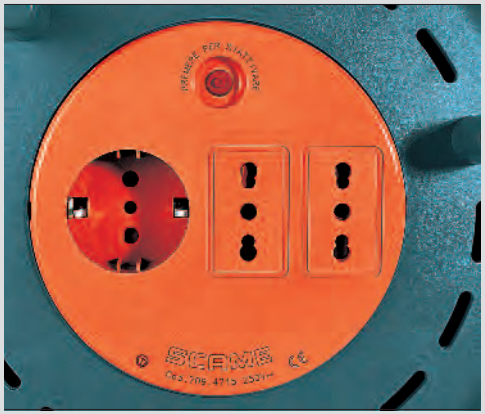

Thermal overload switch: a bimetallic device is put in close contact with the supply cable and protects it from excessive overheating resulting from the Joule effect. If activated, the device opens the circuit to the socket, interrupting the supply of electrical energy. Reactivation is only possible manually and if the temperature is below intervention threshold.
WARNING: The thermal overload switch is not an isolator switch, therefore maintenance operations are carried out after having disconnected the circuit. The thermal overload switch does not protect the load from overcurrents (overloading and short-circuiting).

Handle and knob for rewinding the cable easily.

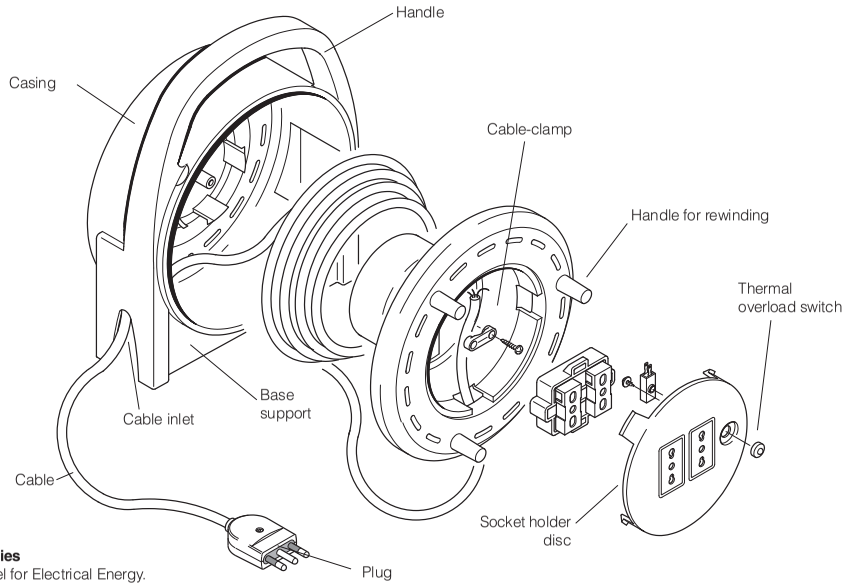

TRIS Series
Cable reel for Electrical Energy.

DOMESTIC CABLE REELS - TV AND TELEPHONE

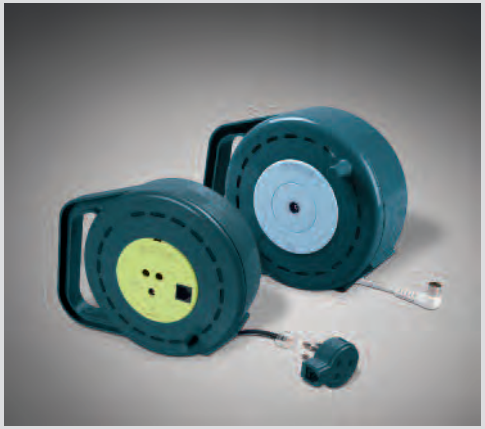

TECHNICAL CHARACTERISTICS

Operating ambient temperature:	**-5°C +40°C**
Glow Wire test:	**650°C**
Material:	**Engineering plastic**
Colour:	**Petrol Blue/Water green** **Petrol Blue/Light blue**

PRACTICAL ADVICE

- When in use the cable should be extended on the ground or the floor avoiding wear and tear or damage (crushing caused by heavy loads or vehicles passing over the cable for example). If necessary suitable mechanical protection should be used.
- After use rewind the cable carefully back onto the reel.
- Periodically check the condition of the cable for example (there should be no signs of wear, compression or cracks) and test the phase and earth conductors for conductivity.

BEHAVIOUR WITH CHEMICAL AND ATMOSPHERIC AGENTS

Saline solution	Acids		Bases		Solvents				Mineral oil	UV rays
	Concentrated	Diluted	Concentrated	Diluted	Hexane	Benzol	Acetone	Alcohol		
Resistant	Limited Resistance	Not Resistant	Limited Resistance	Limited Resistance	Not Resistant	Not Resistant	Not Resistant	Limited Resistance	Limited Resistance	Resistant

VERSIONS

TRIS130 Series
- TV and telephone version

TRIS150 Series
- TV and telephone version

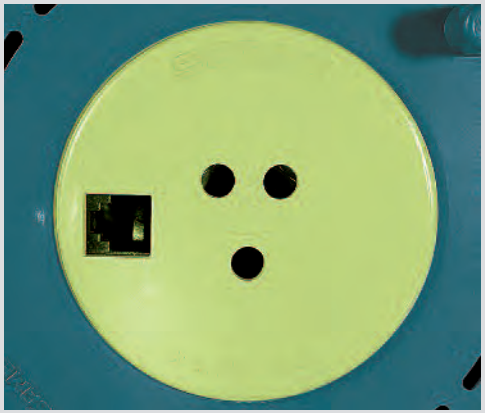

The double socket (RJ and 3 pole TELECOM Italia standard) means that 2 appliances can be connected in parallel, such as a telephone, answer machine, fax, modem. It also allows for the use of telephones with a 3 pole Telecom plug or with a RJ connector of the type 6/2 connected to two wires.

TV socket: IEC connector with a diameter of 9.5 mm for coaxial cable.

APPLICATION EXAMPLES

CONDUIT INSTALLATION ACCESSORIES - IP40

REFERENCE STANDARDS

EN 61386-1
Conduit system for cable management.
Part 1: general requirements.

EN 61386-21
Conduit system for cable management.
Part 2: particular requirements-rigid conduit systems.

EN 60423
Conduits fot electrical installation
External diameters of rigid.
are flexible conduits for electrical installations.

QUALITY MARKS

VERSIONS

	Inspection elbow
	Flat tee inspection
	Bend with two couplings
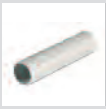	Conduit coupling

TECHNICAL CHARACTERISTICS

Protection degree:	**IP40**
Operating ambient temperature according to the reference standard:	**-5°C +60°C**
Max. operating ambient temperature:	**60°C**
Glow Wire test:	**750°C**
IK degree at 20°C:	**IK06-IK10**
Material:	**Engineering plastic**
Colour:	**Grey RAL 7035**

BEHAVIOUR WITH CHEMICAL AND ATMOSPHERIC AGENTS

Saline solution	Acids		Bases		Solvents				Mineral oil	UV rays
	Concentrated	Diluted	Concentrated	Diluted	Hexane	Benzol	Acetone	Alcohol		
Resistant	Resistant	Resistant	Resistant	Resistant	Limited Resistance	Limited Resistance	Resistant	Resistant	Resistant	Resistant

CONDUIT INSTALLATION ACCESSORIES - IP65

REFERENCE STANDARD

EN 61386-1
Conduit system for cable management.
Part 1: general requirements.

EN 61386-21
Conduit system for cable management.
Part 1: particular requirements-rigid conduit systems.

EN 60423
Conduits fot electrical installation.
External diameters of rigid.
are flexible conduits for electrical installations.

QUALITY MARKS

VERSIONS

	Bend with two couplings
	90° flexible bend
	Conduit couplings
	Conduit to box couplings
	Flexible joint for rigid-box tube connections
	Conduit to sheath couplings
	Sheat to box couplings
	Sheat to EUREKA couplings

TECHNICAL CHARACTERISTICS

Protection degree:	**IP65**
Operating ambient temperature according to the reference standard:	**-5°C +60°C**
Max. operating ambient temperature:	**60°C**
Glow Wire test:	**750°C**
IK degree at 20°C:	**IK06-IK10**
Material:	**Engineering plastic**
Colour:	**Grey RAL 7035**

CABLING OPERATIONS

DOMESTIC PLUGS AND SOCKETS

VERSIONS

90° angled plugs.

Plugs with straight outlet.

Trailing sockets with straight outlet.

REFERENCE STANDARDS

CEI 23-50
Plugs and sockets for domestic and similar applications.
Part 1: general requirements.

IEC 60884-1
Plugs and socket-outlets for household and similar purposes.
Part 1: general requirements.

QUALITY MARKS

TECHNICAL CHARACTERISTICS

Rated current:	**16A**
Rated voltage:	**250V~**
Frequency:	**50Hz**
Insulating voltage:	**250V~**
Protection degree:	**IP20D**
Operating ambient temperature according to the reference standard:	**-15°C +35°C**
Max. operating ambient temperature:	**60°C**
Cabling capacity of the terminals:	**10A: 0,75 - 1,5mm²** **10A: 0,75 - 2,5mm²**
Glow Wire test:	**750°C**
Material:	**Engineering plastic**
Colour:	**White RAL 9010** **Black RAL 9011**

BEHAVIOUR WITH CHEMICAL AND ATMOSPHERIC AGENTS

Saline solution	Acids		Bases		Solvents				Mineral oil	UV rays
	Concentrated	Diluted	Concentrated	Diluted	Hexane	Benzol	Acetone	Alcohol		
Resistant	Not Resistant	Not Resistant	Limited Resistance	Resistant	Resistant	Resistant	Resistant	Resistant	Resistant	Resistant

APPLICATION EXAMPLES

ENCLOSURE FOR WIRING ACCESSORIES

VERSIONS

Surface mounting enclosure - IP40

Surface mounting enclosure - IP55

Flush mounting enclosure - IP55

REFERENCE STANDARDS

EN 60670-1
Boxes and enclosures for electrical accessories for household and similar fixed electrical installations.
Part 1: general requirements.

QUALITY MARKS

TECHNICAL CHARACTERISTICS

Protection degree:	**IP40-IP55**
Operating ambient temperature according to the reference standard:	**-5°C +35°C**
Max. operating ambient temperature:	**60°C**
Glow Wire test:	**650°C**
Material:	**Engineering plastic**
IK degree at 20°C:	**IK06**
Colour:	**Grey RAL 7035** **Anthracite RAL 7021** **(flush mounting version)**

BEHAVIOUR WITH CHEMICAL AND ATMOSPHERIC AGENTS

Saline solution	Acids		Bases		Solvents				Mineral oil	UV rays
	Concentrated	Diluted	Concentrated	Diluted	Hexane	Benzol	Acetone	Alcohol		
Resistant	Limited Resistance	Resistant	Limited Resistance	Resistant	Not Resistant	Not Resistant	Not Resistant	Limited Resistance	Resistant	Resistant

EXAMPLES OF INSTALLATION

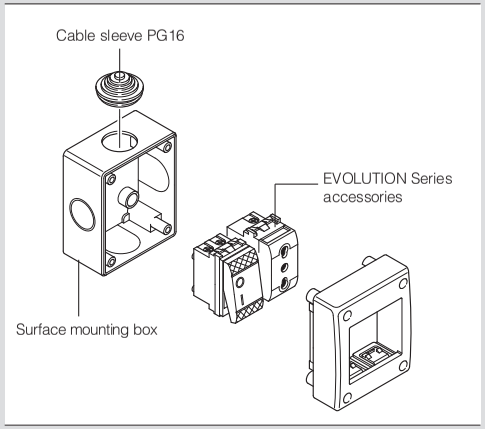

Surface mounting enclosure - IP40.

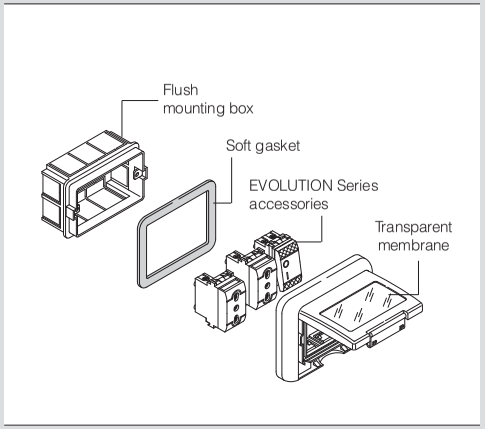

Flush mounting enclosure - IP55.

APPLICATION EXAMPLES

CABLE GLANDS WITH DEVICE TO PREVENT ANY UNSCREWING

REFERENCE STANDARDS

EN 50262
Metric cable glans for electric installations.

VERSIONS

With nut
- PG thread
- METRIC thread
- GAS thread

Without nut
- PG thread
- METRIC thread

With diaphram and nut
- PG thread
- METRIC thread

With diaphram without nut
- PG thread
- METRIC thread

TECHNICAL CHARACTERISTICS

Protection degree:	**IP66-IP68**
Operating ambient temperature:	**-5°C +60°C / -20°C +80°C**
Glow Wire test:	**750°C/850°C**
Material:	**Engineering plastic**
IK degree at 20°C:	**IK05 - IK06**
Versions:	**PG thread METRIC thread GAS thread**
Colour:	**Grey RAL 7035 (light) Grey RAL 7004 (heavy duty)**

BEHAVIOUR WITH CHEMICAL AND ATMOSPHERIC AGENTS (LIGHT VERSION)

Saline solution	Acids		Bases		Solvents				Mineral oil	UV rays
	Concentrated	Diluted	Concentrated	Diluted	Hexane	Benzol	Acetone	Alcohol		
Resistant	Limited Resistance	Resistant	Limited Resistance	Resistant	Limited Resistance	Limited Resistance	Resistant	Resistant	Resistant	Resistant

BEHAVIOUR WITH CHEMICAL AND ATMOSPHERIC AGENTS

Saline solution	Acids		Bases		Solvents				Mineral oil	UV rays
	Concentrated	Diluted	Concentrated	Diluted	Hexane	Benzol	Acetone	Alcohol		
Resistant	Not Resistant	Not Resistant	Limited Resistance	Resistant	Resistant	Resistant	Resistant	Resistant	Resistant	Resistant

CABLE GLAND TABLE: METRIC/PG/GAS

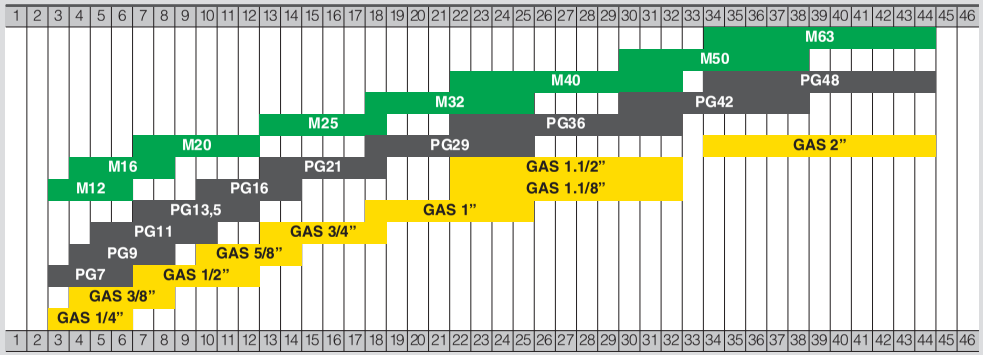

APPLICATION EXAMPLES

MINI-TRUNKING AND ACCESSORIES

VERSIONS

Version with standard lid

Version with enveloping lid

Version with self adhesive bottom

REFERENCE STANDARD

EN 50085-1
Cable trunking systems and cable ducting systems for electrical installations.
Parte 1: general requirements.

EN 50085-2-1
Cable trunking systems and cable ducting systems for electrical installations.
Parte 2-1: cable trunking systems and cable ducting systems intended for mounting on walls and ceiling.

QUALITY MARKS

TECHNICAL CHARACTERISTICS

Protection degree:	**IP40**
Operating ambient temperature according to the reference standard:	**+5°C +60°C**
Max. operating ambient temperature:	**60°C**
Glow Wire test:	**650°C**
Material:	**Engineering plastic**
Colour:	**Grey RAL 7035** **White RAL 9003**
Impact resistance according to the reference standard:	**1 Joule**

BEHAVIOUR WITH CHEMICAL AND ATMOSPHERIC AGENTS

Saline solution	Acids		Bases		Solvents				Mineral oil	UV rays
	Concentrated	Diluted	Concentrated	Diluted	Hexane	Benzol	Acetone	Alcohol		
Resistant	Limited Resistance	Resistant	Limited Resistance	Resistant	Not Resistant	Not Resistant	Limited Resistance	Resistant	Resistant	Resistant

APPLICATION EXAMPLES

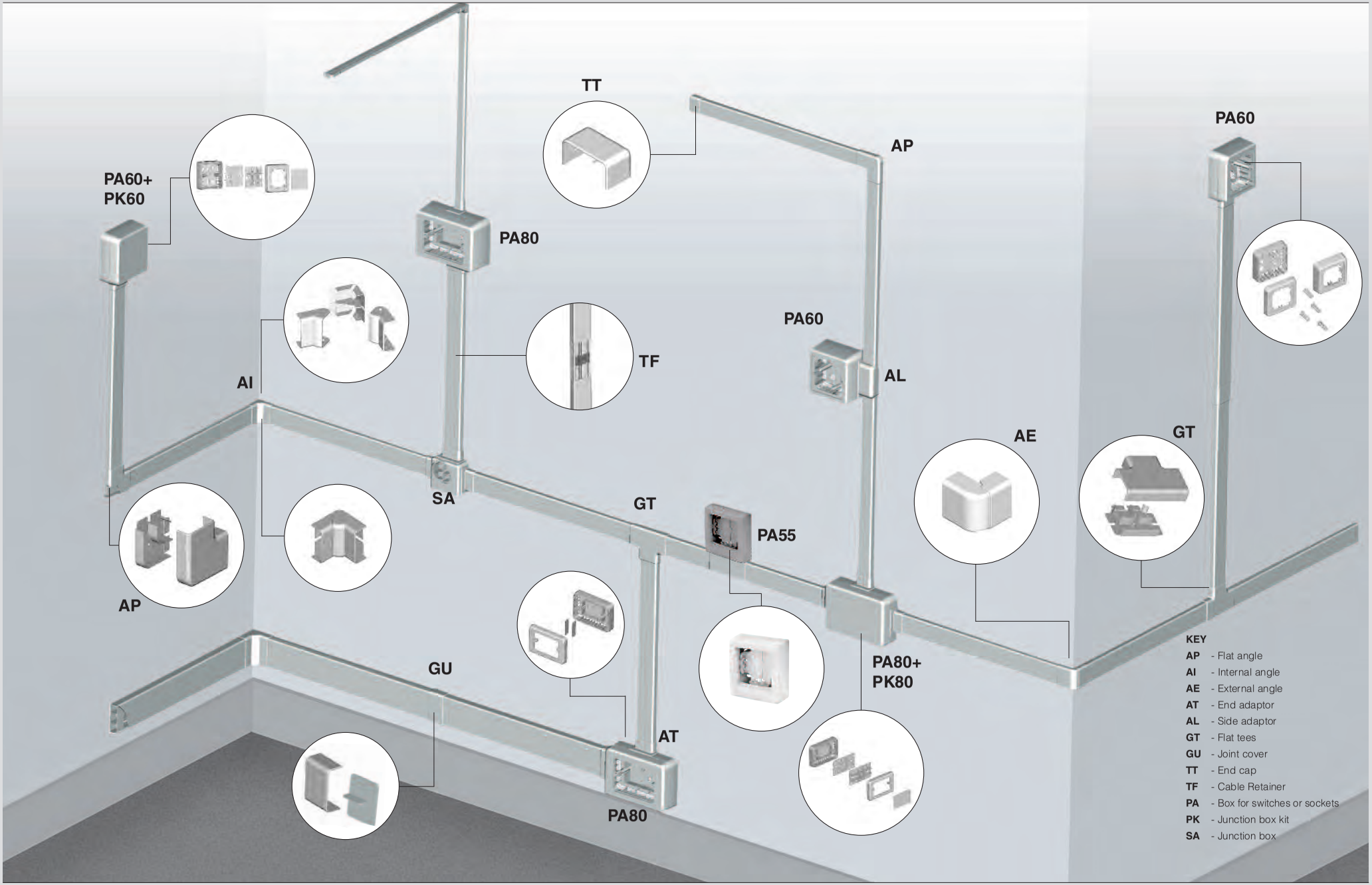
TT
PA60+
PK60
PA80
AP
PA60
AI
TF
PA60
AL
AE
GT
SA
GT
PA55
AP
GU
PA80+
PK80
AT
PA80
KEY
AP - Flat angle
AI - Internal angle
AE - External angle
AT - End adaptor
AL - Side adaptor
GT - Flat tees
GU - Joint cover
TT - End cap
TF - Cable Retainer
PA - Box for switches or sockets
PK - Junction box kit
SA - Junction box

HOW TO CHOOSE THE CORRECT WADO SERIES SCAME MINI-TRUNKING

Note: The maximum allowable number of cables complies with the specifications of IEC 64-8 standards. requiring a capacity factor equal to 50% for the compartments designed to accommodate power cables.

STANDARD LID

Can be removed:
without any tool

	Size w x h (mm)	Number of compartments	A (mm)	B	Compartment	Compartment section (mm²)	Total section (mm²)	CAPACITY Maximum allowable number of cables H07V-U/R/K Cable Section (mm²) 1,5	2,5	4	6
A 1 B	20x10	1	10	20	1	129	129	5	4	3	2
A 1 B	20x15	1	15	20	1	170	170	7	5	4	3
A 1 B	30x15	1	15	30	1	288	288	12	9	7	5
A 1 2 B	40x10	2	10	40	1	126	252	5	3	3	2
					2	126		5	3	3	2
A 1 2 B	40x15	2	15	40	1	173	346	8	5	4	3
					2	173		8	5	4	3
A 1 2 B	40x20	2	20	40	1	259	518	11	8	6	5
					2	259		11	8	6	5
A 1 2 3 B	60x20	3	20	60	1	254	774	11	8	6	5
					2	266		11	8	6	5
					3	254		11	8	6	5

ENVELOPING LID

Can be removed
with the aid of a tool

	Size w x h (mm)	Number of compartments	A (mm)	B	Compartment	Compartment section (mm²)	Total section (mm²)	CAPACITY Maximum allowable number of cables H07V-U/R/K Cable Section (mm²) 1,5	2,5	4	6
A 1 B	20x15	1	15	20	1	160	160	8	5	4	3
A 1 B	30x15	1	15	30	1	278	278	13	9	7	5
A 1 2 B	40x15	2	15	40	1	168	336	7	5	4	3
					2	168		7	5	4	3
A 1 2 B	40x20	2	20	40	1	248	496	11	8	6	5
					2	248		11	8	6	5
A 1 2 3 B	60x20	2	20	60	1	242	750	12	7	6	5
					2	266		12	8	6	5
					3	242		12	7	6	5

SKIRTING TRUNKING AND ACCESSORIES

VERSIONS

80mm skirting trunking

120mm skirting trunking

Floor trunking

REFERENCE STANDARDS

EN 50085-1
Cable trunking systems and cable ducting systems for electrical installations.
Parte 1: general requirements.

EN 50085-2-1
Cable trunking systems and cable ducting systems for electrical installations.
Parte 2-1: cable trunking systems and cable ducting systems intended for mounting on walls and ceiling.

QUALITY MARKS

TECHNICAL CHARACTERISTICS

Protection degree:	**IP40**
Operating ambient temperature according to the reference standard:	**+5°C +60°C**
Max. operating ambient temperature:	**60°C**
Glow Wire test:	**650°C**
Material:	**Engineering plastic**
Colour:	**Grey RAL 7035** **White RAL 9003** **Anthracite** **Brown**
Impact resistance according to the reference standard:	**1 Joule**

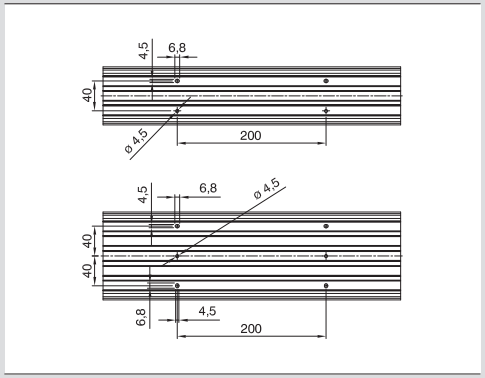

The trunking back is provided with ø 4.5-mm holes and 6.8x4.5-mm slots with 40-mm distance between centres and 200-mm pitch.

BEHAVIOUR WITH CHEMICAL AND ATMOSPHERIC AGENTS

Saline solution	Acids		Bases		Solvents				Mineral oil	UV rays
	Concentrated	Diluted	Concentrated	Diluted	Hexane	Benzol	Acetone	Alcohol		
Resistant	Limited Resistance	Resistant	Limited Resistance	Resistant	Not Resistant	Not Resistant	Limited Resistance	Resistant	Resistant	Resistant

TRUNKING SECTIONS (mm²)

			1	2	3	4	5
80-mm skirting trunking	Trunking sections mm²		274	300	274		
	Max. number of conductors installable	1,5mm²	13	14	13		
		2,5mm²	9	10	9		
		4mm²	7	8	7		
		6mm²	5	6	5		
120-mm skirting trunking 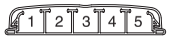	Trunking sections mm²		327	391	409	391	327
	Max. number of conductors installable	1,5mm²	14	18	18	18	14
		2,5mm²	10	12	12	12	10
		4mm²	8	9	9	9	8
		6mm²	6	7	7	7	6
Floor trunking	Trunking sections mm²		152	194	152		
	Max. number of conductors installable	1,5mm²	7	8	7		
		2,5mm²	5	5	5		
		4mm²	4	4	4		
		6mm²	3	3	3		

APPLICATION EXAMPLES

SKIRTING, FLOOR TRUNKING AND ACCESSORIES

80MM VERSION

Offering excellent aesthetic and functional integration with skirting version 120 mm and with mini-trunking by Scame, WADO Series.

KEY

AP - Flat angle
AI - Variable internal angle
AE - Variable external angle
CC - Closing cap
GT - Flat tees
GU - Joint cover
GM - Flat tees for mini-trunking
GT - Flat tees
GS - Floor trunking joint
TT - End cap
TF - Cable retainer
TM - Wall passage terminal
PA - Box for switches or sockets
PB - Box for switches or sockets
SA - Junction box
AT - End adaptor (mini-trunking)

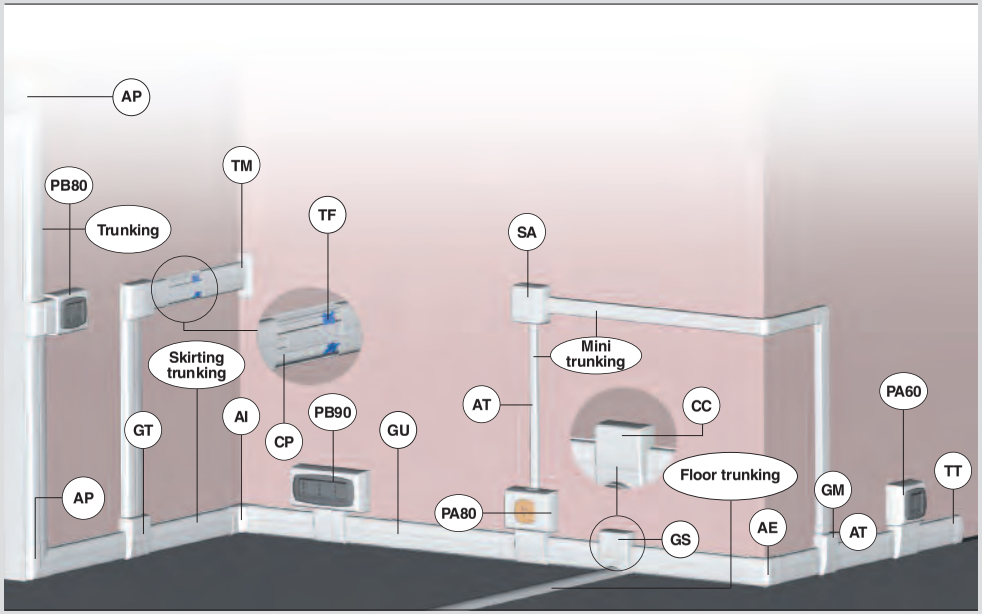

120mm VERSION

Offering excellent aesthetic and functional integration with skirting version 120 mm and with mini-trunking by Scame, WADO series.

KEY

AP - Flat angle
AI - Variable internal angle
AE - Variable external angle
CC - Closing cap
GT - Flat tees
GU - Joint cover
GM - Flat tees for mini-trunking
GT - Flat tees
GS - Floor trunking joint
TT - End cap
TF - Cable retainer
TM - Wall passage terminal
PA - Box for switches or sockets
PB - Box for switches or sockets
AT - End adaptor (mini-trunking)

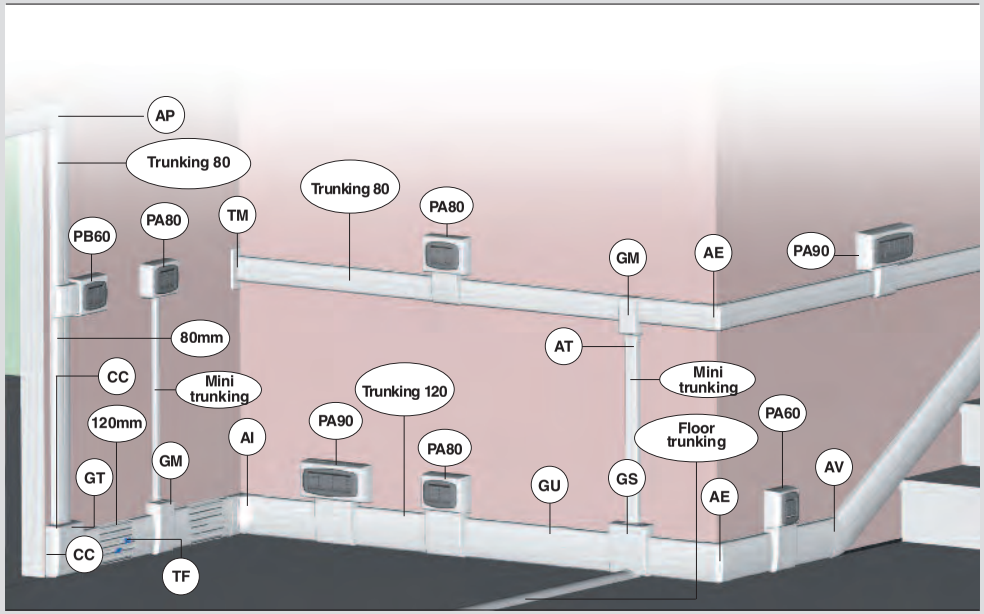

CABLE AND SET HOUSING TRUNKING

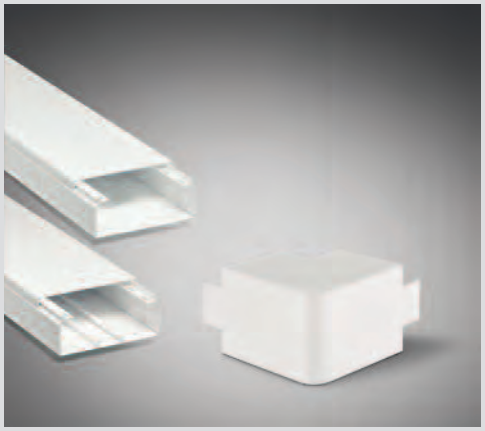

VERSIONS

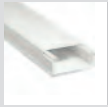

Cable trunking

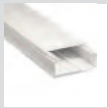

Cable and set ousing trunking

REFERENCE STANDARD

CEI 23-32
Trunking insulating plastic material and related accessories for cable trunking nd carrying electrical appliances, for ceiling and wall-mounting.

QUALITY MARKS

TECHNICAL CHARACTERISTICS

Protection degree:	**IP40**
Operating ambient temperature according to the reference standard:	**-25°C +60°C**
Max. operating ambient temperature:	**60°C**
Glow Wire test:	**960°C**
Material:	**Engineering plastic**
Colour:	**White RAL 9016**
Impact resistance according to the reference standard:	**6 Joule**

BEHAVIOUR WITH CHEMICAL AND ATMOSPHERIC AGENTS

Saline solution	Acids		Bases		Solvents				Mineral oil	UV rays
	Concentrated	Diluted	Concentrated	Diluted	Hexane	Benzol	Acetone	Alcohol		
Resistant	Limited Resistance	Resistant	Limited Resistance	Resistant	Not Resistant	Not Resistant	Limited Resistance	Resistant	Resistant	Resistant

TRUNKING SECTIONS AND NUMBER OF CABLES TO INSTALL

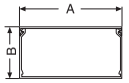

Type of trunking A	B	Trunking geometry separating cm²	SEZ. 1,5mm²	SEZ. 2,5mm²	SEZ. 4mm²	SEZ. 6mm²	SEZ. 10mm²	SEZ. 16mm²	SEZ. 25mm²
40	40	14,2	74	51	39	23	16	12	7
60	40	20,4	105	74	56	33	23	17	11
60	60	32	166	115	88	51	35	26	17
80	60	42,4	220	153	117	68	47	35	22
100	60	53,6	279	194	148	86	59	44	28
150	60	79,5	413	287	220	128	88	65	42
100	80	72,8	379	263	201	117	80	60	38
150	80	108,8	566	393	301	175	120	89	57
200	80	149,7	758	526	403	234	161	120	77

WORKING GEOMETRIC SECTION OF TRUNKING IN cm² WITH INSTALLED SWITCH HOLDERS

Type of trunking A	Trunking section B	Holder centre distance cm²	Holder centre distance 83,5cm²	Jack holder 60cm²	Socket, holder cm²	cm²
80	60	42,6	8	7	0,3	-
100	60	53,6	19	18	11	-
120	60	62,9	28	27	21	-
150	60	79,5	45	44	37	-
100	80	72,8	38	37	31	-
150	80	108,8	74	73	66	27
200	80	145,7	111	110	103	64

SLOTTED CABLE TRUNKING

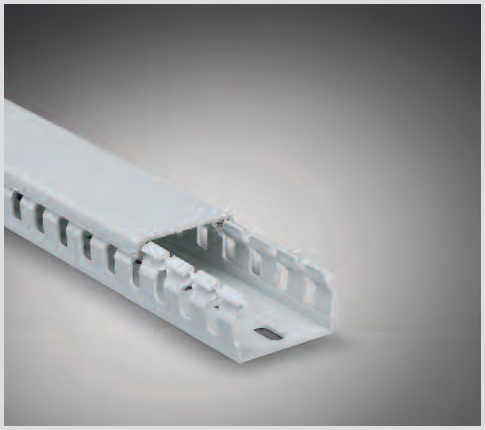

VERSIONS

Slotted cable trunking
- standard pitch
- short pitch

REFERENCE STANDARDS

EN 50085-1
Cable trunking systems and cable ducting systems for electrical installations.
Parte 1: general requirements.

EN 50085-2-3
Cable trunking systems and cable ducting systems for electrical installations.
Part 2-3: particular requirements for slotted cable trunking systems intended for installation in cabinets.

QUALITY MARKS

TECHNICAL CHARACTERISTICS

Operating ambient temperature according to the reference standard:	**-5°C +60°C**
Max. operating ambient temperature:	**60°C**
Glow Wire test:	**960°C**
Material:	**Engineering plastic**
Colour:	**Grey RAL 7030**
Impact resistance according to the reference standard:	**1 Joule**

BEHAVIOUR WITH CHEMICAL AND ATMOSPHERIC AGENTS

Saline solution	Acids		Bases		Solvents				Mineral oil	UV rays
	Concentrated	Diluted	Concentrated	Diluted	Hexane	Benzol	Acetone	Alcohol		
Resistant	Limited Resistance	Resistant	Limited Resistance	Resistant	Not Resistant	Not Resistant	Limited Resistance	Resistant	Resistant	Resistant

APPLICATION EXAMPLES

TRUNKING FOR AIR CONDITIONING SYSTEMS

VERSIONS

Dimension: 60x45mm

Dimension: 80x60mm

Dimension: 110x75mm

TECHNICAL CHARACTERISTICS

Operating ambient temperature according to the reference standard:	**-25°C +60°C**
Material:	**Engineering plastic**
Colour:	**White RAL 9001**

TECHNICAL CHARACTERISTICS OF THE MATERIAL

Resistance to tensile stress:	**40N/mm²**
Resistance to breaking:	**38N/mm²**
Elogation to pulling stress:	**109%**
Elastic module:	**2810N/mm²**
Resistance to impacts 23°C c.i.:	**745/m**
Vic at softening temperature 50N (thermal increment 50°C/h):	**81°C**
Inflammability on 1.36 mm thickness (flame is not propagated):	**UL 94 V-0**

BEHAVIOUR WITH CHEMICAL AND ATMOSPHERIC AGENTS

Saline solution	Acids		Bases		Solvents				Mineral oil	UV rays
	Concentrated	Diluted	Concentrated	Diluted	Hexane	Benzol	Acetone	Alcohol		
Resistant	Limited Resistance	Resistant	Limited Resistance	Resistant	Not Resistant	Not Resistant	Limited Resistance	Resistant	Resistant	Resistant

FIXING HOLES

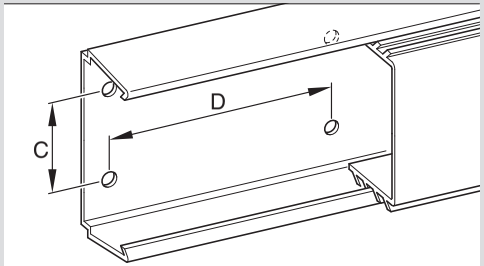

Code	C	D
871.060	35	200
871.080	50	200
871.110	80	200

METHOD OF INSTALLATION

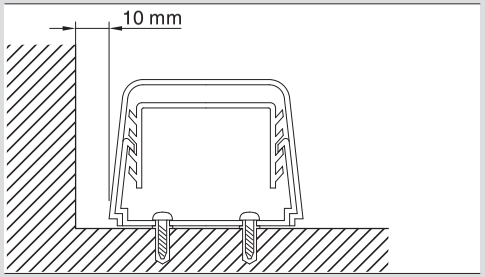

The trunking base is pre-drilled at 600mm centres for wall fixing.
The bracket has to be installed just on blocks.
The bend and wall passage are ready for fixing by blocks.

APPLICATION EXAMPLES

FLUSH MOUNTING BOXES

VERSIONS

Round flush mounting box

Rectangular flush mounting box

Flush junction box

REFERENCE STANDARDS

EN 60670-1
Boxes and enclosure for electrical accessories for household and similar fixed electrical installation.
Part 1: general requirements.

QUALITY MARKS

TECHNICAL CHARACTERISTICS

Protection degree:	**IP40**
Operating ambient temperature according to the reference standard:	**-25°C +60°C**
Max. operating ambient temperature:	**60°C**
Glow Wire test:	**650°C**
Material:	**Engineering plastic**
Halogen free:	**Yes**
DIN rail fixing:	**Yes**
IK degree at 20°C:	**IK04 - IK07 (cover)**

BEHAVIOUR WITH CHEMICAL AND ATMOSPHERIC AGENTS

Saline solution	Acids		Bases		Solvents				Mineral oil	UV rays
	Concentrated	Diluted	Concentrated	Diluted	Hexane	Benzol	Acetone	Alcohol		
Resistant	Not Resistant	Not Resistant	Limited Resistance	Resistant	Not Resistant	Not Resistant	Not Resistant	Limited Resistance	Resistant	Resistant

FLUSH MOUNTING INSTALLATION

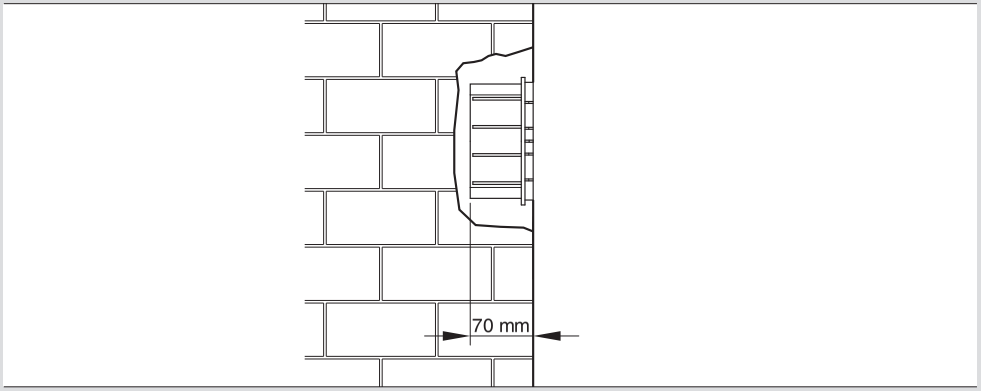

APPLICATION EXAMPLES

INDUSTRIAL PLUGS AND SOCKETS

REFERENCE STANDARDS

EN 60309-1
Plugs, socket-outlets and couples for industrial purposes.
Part 1: general requirements.

EN 60309-2
Plugs, socket-outlets and couples for industrial purposes.
Part 2: dimensional interchangeability requirements for pin and contact-tube accessories.

QUALITY MARKS

VERSIONS

Plugs

Connectors

TECHNICAL CHARACTERISTICS

Rated current:	**16A-32A**
Rated voltage:	**110-130V** **200-250V** **380-415V**
Frequency:	**50/60Hz**
Insulation voltage:	**500V**
Protection degree:	**IP44**
Operating ambient temperature according to the reference standard:	**-25°C +40°C**
Glow wire test:	**850°C contacts carrier** **650°C handle**
IK degree:	**IK08**
Material:	**Engineering plastic**

WIRING AND INSTALLATION

Wiring capacity of the terminals
Cross-section of connectable conductors (mm²)

Rated voltage	Rated current (A)	Plugs and connectors		Sockets outlet	
		Min	Max	Min	Max
>50V	16A	1,5	2,5	1,5	4
	32A	2,5	6	2,5	10

Max. cable size accepted by the cable clamp

Rated current (A)	Outside Ø mm	
	Min	Max
16A	8	15
32A	11,5	21

BEHAVIOUR WITH CHEMICAL AND ATMOSPHERIC AGENTS

Saline solution	Acids		Bases		Solvents				Mineral oil	UV rays
	Concentrated	Diluted	Concentrated	Diluted	Hexane	Benzol	Acetone	Alcohol		
Resistant	Not Resistant	Limited Resistance	Limited Resistance	Resistant	Resistant	Resistant	Resistant	Resistant	Resistant	Resistant

APPLICATION EXAMPLES

SCAME
electrical solutions

GENERAL CATALOGUE 2016-2018

index by product number

Index by product number

www.scame.com

For more informations, visit our website.

Standard and approvals:

IMQ - Istituto Italiano del Marchio di qualità

CSV/IMQ - Certificato con sorveglianza

AEE - Marca de conformidad a normas UNE

DEMKO - Danmarks Elektriscke Materiel Kontrol

BSI - British Standard Institution

VDE - Verband Deutscher Elektrotechniker

ÖVE - Österreichischer Verband für Elektrotechnik

FIMKO - Sahkotarkastuskeskus / Elinspecktions

NEMKO - Norges Elektriske Materiellkontroll

SEMKO - Svenska Elektriska Materielkontrollanstalten

CEBEC - Comité Electrotecnique Belge

UTE - Union Technique de l'Electricité

KEMA-KEUR - N.V. Tot Keuring Van Electrotechnische Materialen

SEV - Schweizerischer Elektrotechnischer Verein

SAA - Standard Association of Australia

MEEI - Magyar elektrotechnikai ellenórzó intézet

IRAM - Instituto Argentino de Normalizacion

UL CLASSIFIED (USA)

UL LISTED cUL

GOST - Gosudarstvenne komitel Sandardtov

Index by product number

101			
Cat.numb.		Pack qty.	Page
101.6200		100	633
101.6200.11	✦	100	633
101.6200.12	✦	100	633
101.6200.24	✦	100	633
101.6201.G		100/800	626
101.6203.G	✦	100	626
101.6301K.G	✦	6/240	626
101.6302.20G	✦	12/480	626
101.6302.G	✦	12/480	626
101.6303.20G	✦	12/480	626
101.6303.G		12/480	626
101.6304.20G	✦	12/480	626
101.6304.G	✦	12/480	626
101.6311.G		12/480	626
101.6323.G		12/480	627
101.63312.G	✦	12/480	627
101.6331T.G	✦	6/240	627
101.6332.G	✦	12/480	627
101.6333.G		12/480	627
101.6334.G	✦	12/480	627
101.6340.06G	✦	12/480	627
101.6340.10G	✦	12/480	627
101.6340.G	✦	12/480	627
101.6341.06G	✦	6/240	628
101.6341.10G	✦	6/240	628
101.6341.G	✦	6/240	628
101.6345.G	✦	12/480	628
101.6401.G	✦	12/480	629
101.6402.G	✦	12/480	629
101.6403.G		12/480	629
101.6403.GD		6	630
101.6403.R		12/480	629
101.6404.G	✦	6/240	629
101.6404.R	✦	6/240	629
101.6405.G		6/240	629
101.6405.GD		6	630
101.6405.R		6/240	629
101.6407.G		6/240	629
101.6407.GD		6	630
101.6407.R		6/240	629
101.6411.G		6/240	629
101.6411.GD	✔	6	630
101.6412.G		6/240	629
101.6412.R		6/240	629
101.6413.G	✦	6/240	629
101.6413.GD	✔	6	630
101.6414.G	✔	6/240	629
101.6417.G		12/480	629
101.6417.GD	✔	6	630
101.6421.G	✔	12/480	630
101.6421.R	✔	12/480	630
101.6423.G	✦	12/480	630
101.6424.G	✔	6/240	630
101.6424.GD	✔	6	630
101.6425.G	✔	12/480	630
101.6426.G	✔	6/240	630
101.6427.G	✔	6/240	630
101.6428.G		6/240	630
101.6428.GD	✔	6	630
101.6429.G	✔	6/240	630
101.6431.01G	✦	12/480	631
101.6431.10	✦	12/480	631

101			
Cat.numb.		Pack qty.	Page
101.6431.10G	✦	12/480	631
101.6431.G	✦	12/480	631
101.6432.01G	✦	12/480	631
101.6432.10G	✦	12/480	631
101.6432.G	✦	12/480	631
101.6433.G	✦	12/480	631
101.6434.G	✦	6/240	631
101.6461.64G	✦	12/480	632
101.6462.64G	✦	12/480	632
101.6464.G	✦	12/480	632
101.6466.G	✦	12/480	0
101.6481.50G	✦	6/240	632
101.6481.50GD		6	630
101.6481.51G	✦	6/240	632
101.6481.60G		6/240	632
101.6481.61G		6/240	632
101.6541.1G	✦	12/480	632
101.6541.2G	✦	12/480	632
101.6541.2GD		6	630
101.6541.3G	✦	12/480	632
101.6542.G	✦	12/480	632

104			
Cat.numb.		Pack qty.	Page
104.4000		50/500	540
104.4000/N		50/500	540
104.4001		50/500	540
104.4001/N		50/500	540
104.4003		50/500	540
104.4003/N		50/500	540
104.4010		50/500	540
104.4010/N		50/500	540
104.4011		50/500	540
104.4011/N		50/500	540
104.4013		50/500	540
104.4013/N		50/500	540
104.4068		100	540
104.4068/N		100	540
104.4070		100	540
104.4070/N		100	540

106			
Cat.numb.		Pack qty.	Page
106.3000		50/500	541
106.3000/N		50/500	541
106.3001		50/500	541
106.3001/N		50/500	541
106.3003		50/500	541
106.3003/N		50/500	541
106.3010		50/500	541
106.3010/N		50/500	541
106.3011		50/500	541
106.3011/N		50/500	541
106.3013		50/500	541
106.3013/N		50/500	541

110			
Cat.numb.		Pack qty.	Page
110.3000	✔	20/400	542
110.3010	✔	20/400	542
110.3100	✔	10/150	542
110.3150	✔	10/150	542
110.3160	✔	10/150	542

116			
Cat.numb.		Pack qty.	Page
116.68		100	541
116.68/N		100	541
116.70		100	541
116.70/N		100	541

130			
Cat.numb.		Pack qty.	Page
130.2063		50/500	543
130.2063/N		50/500	543
130.2083		25/250	543
130.2083/N		25/250	543
130.2084		25/250	543
130.2084/N		25/250	543
130.2085		25/250	543
130.2085/N		25/250	543
130.83		50/500	543
130.83/N		50/500	543

136			
Cat.numb.		Pack qty.	Page
136.001	✦	10	625
136.0901		10/100	0
136.0902		10/100	0
136.0911		10/100	0
136.0912		10/100	0
136.4121		5/100	618
136.4122		5/100	618
136.4123		3/60	618
136.4123-411	✔	50	619
136.4123-412		50	619
136.4123-413	✔	50	619
136.4123-414	✔	50	619
136.4124		1/24	618
136.4126		1/16	618
136.5023		85	622
136.5023.AT		85	622
136.5121		5/80	618
136.5121-302		32/128	619
136.5121-303		32/128	619
136.5121-304		32/128	619
136.5121-323		32/128	619
136.5121-333		32/128	619
136.5121-417	✔	32/128	619
136.5122		5/80	618
136.5122-303		32/128	620
136.5122-323		32/128	620
136.5122-407	✦	32/128	620
136.5122-411	✦	32/128	620

136			
Cat.numb.		Pack qty.	Page
136.5122-412		32/128	620
136.5122-413		32/128	620
136.5122-414		32/128	620
136.5122-427	✦	32/128	620
136.5122-429	✔	32/128	620
136.5123		3/60	618
136.5123-303		24/96	620
136.5123-323		24/96	620
136.5123-407	✦	24/96	620
136.5123-411	✦	24/96	620
136.5123-412		24/96	620
136.5123-413		24/96	620
136.5123-414	✔	24/96	620
136.5123-429	✔	24/96	620
136.5124		1/24	618
136.5124-303	✔	1/24	621
136.5124-323	✔	1/24	621
136.5124-407	✦	24	621
136.5124-411	✔	1/24	621
136.5124-412		1/24	621
136.5124-413	✔	1/24	621
136.5126		1/16	618
136.5126-303	✔	1/16	621
136.5126-323	✔	1/16	621
136.5126-407	✦	16	621
136.5126-411	✔	1/16	621
136.5126-412		1/16	621
136.5126-413	✔	1/16	621
136.6122	✔	5/100	0
136.6123	✔	3/60	0
136.6124	✔	24	0
136.7023	✔	85	0
136.7122	✔	5/80	0
136.7123	✔	3/60	0
136.7124	✔	24	0

137			
Cat.numb.		Pack qty.	Page
137.001	✦	1/12	617
137.002	✦	1/12	617
137.101	✦	1/12	609
137.102	✦	1/12	609
137.103	✦	1/12	609
137.104	✦	1/12	609
137.121	✦	1/12	613
137.122	✦	1/12	613
137.123	✦	1/12	613
137.124	✦	1/12	613
137.125		12/120	614
137.131		1/12	615
137.141		1/12	615
137.151		1/12	616
137.200	✦	10/100	617
137.201	✦	10/100	617
137.202	✦	10/100	617
137.3011	✦	1/12	609
137.3012	✦	1/12	609
137.3021	✦	1/12	609
137.3022	✦	1/12	609
137.3111		1/12	609

● = IMQ or other quality marks ✔ = new product ✦ = make to order

137			
Cat.numb.		Pack qty.	Page
137.3112		1/12	609
137.3211	✦	1/12	609
137.3212	✦	1/12	609
137.3221	✦	1/12	609
137.3222	✦	1/12	609
137.3311B	✦	1/12	609
137.3311P	✦	1/12	609
137.3312P		1/12	609
137.3321		1/12	609
137.3410	✔	1/12	610
137.3462	✦	1/12	609
137.4001	✦	1/12	612
137.4002	✦	1/12	612
137.4003	✦	1/12	612
137.4022	✦	1/12	612
137.4042	✦	1/12	612
137.4043		1/12	612
137.4111	✦	1/12	612
137.4403	✦	1/12	611
137.4404	✦	1/12	611
137.4407	✦	1/12	611
137.4411	✦	1/12	611
137.4412	✦	1/12	611
137.4417		1/12	611
137.4421		1/12	611
137.4424	✦	1/12	611
137.4427	✦	1/12	611
137.4481.50	✦	1/12	611
137.5011	✦	1/12	606
137.5012	✦	1/12	606
137.5021	✦	1/12	606
137.5022	✦	1/12	606
137.5111		1/12	606
137.5112		1/12	606
137.5211	✦	1/12	606
137.5212	✦	1/12	606
137.5221	✦	1/12	606
137.5222	✦	1/12	606
137.5311B	✦	1/12	606
137.5311P	✦	1/12	606
137.5312P		1/12	606
137.5321		1/12	606
137.5410	✔	1/12	606
137.5462	✦	1/12	606
137.6001	✦	1/12	608
137.6002	✦	1/12	608
137.6003	✦	1/12	608
137.6022	✦	1/12	608
137.6042	✦	1/12	608
137.6043		1/12	608
137.6111	✦	1/12	608
137.6403	✦	1/12	607
137.6404	✦	1/12	607
137.6407	✦	1/12	607
137.6411	✦	1/12	607
137.6412	✦	1/12	607
137.6417		1/12	607
137.6421		1/12	607
137.6424	✦	1/12	607
137.6427	✦	1/12	607
137.6481.50	✦	1/12	607

144			
Cat.numb.		Pack qty.	Page
144.441		50	546
144.441/N		50	546
144.450		25/250	546
144.450/N		25/250	546
144.451		50	546
144.451/N		50	546
144.455		50	546
144.455/N		50	546
144.457		25	547
144.457/N		25	547
144.459		25	547
144.459/N		25	547
144.470	✔	25	547
144.470/N	✔	25	547

146			
Cat.numb.		Pack qty.	Page
146.351		50/500	549
146.351/N	✦	50/500	549
146.360		12/48	553
146.361		50	549
146.361/N		50	549
146.500	✦	25/250	552
146.501	✦	25/250	552
146.510		10	552
146.510/N		10	552
146.511		10	552
146.511/N		10	552
146.530		25/250	551
146.530/N	✦	25/250	551
146.534		25/250	551
146.534/N	✦	25/250	551
146.550/3		25/250	550
146.550/3-N		25/250	550
146.555/3		50	550
146.555/3-N		50	550
146.557		25	550
146.557/N		25	550
146.559		25	550
146.559/N		25	550
146.560		25	551
146.560/N		25	551
146.561		25	551
146.561/N		25	551
146.570	✔	25	550
146.570/N	✔	25	550
146.641		50	548
146.641/N		50	548
146.651		50	548
146.651/N		50	548
146.661		50	548
146.661/N		50	548

160			
Cat.numb.		Pack qty.	Page
160.001		10/100	566
160.219	✦	10/100	565
160.219/C		10	563

160			
Cat.numb.		Pack qty.	Page
160.219/C-F	✦	10	563
160.219/C-N		10	563
160.219/C-T	✦	10	563
160.219/F	✦	10/100	565
160.219/N	✦	10/100	565
160.219/T	✦	10/100	565
160.220		10/100	565
160.220/C		10	563
160.220/C-F	✦	10	563
160.220/C-N		10	563
160.220/C-T	✦	10	563
160.220/F	✦	10/100	565
160.220/N		10/100	565
160.220/T	✦	10/100	565
160.223		10/100	565
160.223/C		10	563
160.223/C-F	✦	10	563
160.223/C-N		10	563
160.223/C-T	✦	10	563
160.223/F	✦	10/100	565
160.223/N		10/100	565
160.223/T	✦	10/100	565
160.224		10/120	565
160.224/C		10	563
160.224/C-F	✦	10	563
160.224/C-N		10	563
160.224/C-T	✦	10	563
160.224/F	✦	10/120	565
160.224/N		10/120	565
160.224/T	✦	10/120	565
160.225		10/120	565
160.225/C		10	563
160.225/C-F	✦	10	563
160.225/C-N		10	563
160.225/C-T	✦	10	563
160.225/F	✦	10/120	565
160.225/N		10/120	565
160.225/T	✦	10/120	565
160.229		10/100	562
160.229/C		10	561
160.229/C-F		10	561
160.229/C-N		10	561
160.229/C-T		10	561
160.229/F	✦	10/100	562
160.229/N	✦	10/100	562
160.229/T	✦	10/100	562
160.230		10/40	562
160.230/C		10	561
160.230/C-F		10	561
160.230/C-N		10	561
160.230/C-T		10	561
160.230/D		10	561
160.230/D-N	✦	10	561
160.230/F	✦	10/40	562
160.230/N		10/40	562
160.230/T	✦	10/40	562
160.231		10/40	565
160.231/C		10	563
160.231/C-F	✦	10	563
160.231/C-N		10	563
160.231/C-T	✦	10	563
160.231/F	✦	10/40	565

160			
Cat.numb.		Pack qty.	Page
160.231/N		10/40	565
160.231/T	✦	10/40	565
160.232/C		10	560
160.232/C-F	✦	10	560
160.232/C-T		10	560
160.233/C		10	560
160.233/C-F	✦	10	560
160.233/C-T	✦	10	560
160.233/D	✦	10	560
160.237/C	✦	10	560
160.237/C-F	✦	10	560
160.237/C-T	✦	10	560
160.238	✦	10/50	565
160.238/C	✦	10	563
160.238/C-F	✦	10	563
160.238/C-N	✦	10	563
160.238/C-T	✦	10	563
160.238/D	✦	10	564
160.238/D-F	✦	10	564
160.238/D-N	✦	10	564
160.238/D-T	✦	10	564
160.238/F	✦	10/50	565
160.238/N		10/50	565
160.238/T	✦	10/50	565
160.239	✦	10/50	562
160.239/C		10	561
160.239/C-F	✦	10	561
160.239/C-N	✦	10	561
160.239/C-T	✦	10	561
160.239/D	✦	10	561
160.239/D-F	✦	10	561
160.239/D-N	✦	10	561
160.239/D-T	✦	10	561
160.239/F	✦	10/50	562
160.239/N	✦	10/50	562
160.239/T	✦	10/50	562
160.240/C	✦	10	560
160.240/C-F	✦	10	560
160.240/C-T	✦	10	560
160.240/D	✦	10	560
160.240/D-F	✦	10	560
160.240/D-T	✦	10	560
160.241		10/50	565
160.241/C		10	564
160.241/C-F	✦	10	564
160.241/C-N	✦	10	564
160.241/C-T	✦	10	564
160.241/F	✦	10/50	565
160.241/N	✦	10/50	565
160.241/T	✦	10/50	565
160.242	✦	10/50	562
160.242/C	✦	10	561
160.242/C-F	✦	10	561
160.242/C-N	✦	10	561
160.242/C-T	✦	10	561
160.242/F	✦	10/50	562
160.242/N	✦	10/50	562
160.242/T	✦	10/50	562
160.243/D	✦	10	560
160.243/D-F	✦	10	560
160.243/D-T	✦	10	560
160.247	✦	10/50	565

Index by product number

160		
Cat.numb.	Pack qty.	Page
160.247/C	10	564
160.247/C-F	10	564
160.247/C-N	10	564
160.247/C-T	10	564
160.247/F	10/50	565
160.247/N	10/50	565
160.247/T	10/50	565
160.248	10/50	562
160.248/C	10	561
160.248/C-F	10	561
160.248/C-N	10	561
160.248/C-T	10	561
160.248/F	10/50	562
160.248/N	10/50	562
160.248/T	10/50	562
160.249/C	10	560
160.249/C-F	10	560
160.249/C-T	10	560
160.250/C	10	561
160.250/C-N	10	561
160.5013	6/24	566
160.5014	6/24	566

161		
Cat.numb.	Pack qty.	Page
161.246/C-F	10	567
161.246/C-T	10	567
161.40500.F	10	570
161.40500.N	10	570
161.40500.R	10	570
161.40500.T	10	570
161.40501.F	10	568
161.40501.N	10	568
161.40501.R	10	568
161.40501.T	10	568
161.40510.F	10	569
161.40510.N	10	569
161.40510.R	10	569
161.40510.T	10	569
161.40511.F	10	567
161.40511.N	10	567
161.40511.R	10	567
161.40511.T	10	567
161.60500.N	10	570
161.60500.R	10	570
161.60501.N	10	568
161.60501.R	10	568
161.60510.N	10	569
161.60510.R	10	569
161.60511.N	10	567
161.60511.R	10	567

165		
Cat.numb.	Pack qty.	Page
165.10401.N	10	556
165.10401.R	10	556
165.20401.N	10	556
165.20401.R	10	556

165		
Cat.numb.	Pack qty.	Page
165.20411.N	10	556
165.20411.R	10	556
165.20421.T	10	558
165.20431.N	10	559
165.20431.ND	10	559
165.20431.R	10	559
165.20431.RD	10	559
165.20441.N	10	557
165.20441.R	10	557
165.30401.N	10	556
165.30401.R	10	556
165.30411.N	10	556
165.30411.R	10	556
165.30421.T	10	558
165.40411.N	10	556
165.40411.R	10	556

168		
Cat.numb.	Pack qty.	Page
168.0072B-03	10	571
168.0072N-03	10	571
168.0073B-03	10	571
168.0073B-05	10	571
168.0073N-03	10	571
168.0073N-05	10	571
168.4272B-03	10	571
168.4272N-03	10	571
168.4273B-03	10	571
168.4273B-05	10	571
168.4273N-03	10	571
168.4273N-05	10	571

180		
Cat.numb.	Pack qty.	Page
180.4520	10/100	600
180.4521	100/1600	600
180.4700	10/100	600
180.4701	100/1600	600
180.5510	50	599
180.5511	50	599
180.5520	50	599
180.5521	50	599
180.561	50/500	601
180.563	10/50	601
180.5640	10/100	600
180.5641	10/100	600
180.58/CEI	200/2000	601
180.5902	60	602
180.5902/N	60	602
180.5912	60	602
180.5913	50	602
180.5915	35	602
180.60/CEI	200/2000	601
180.60/CEI-P	200/2000	601
180.60/CEI-S	200/2000	601
180.690	12/72	594
180.691	12/72	594
180.692	12/72	357

180		
Cat.numb.	Pack qty.	Page
180.701	12/60	592
180.702	12/60	592
180.705	12/60	592
180.706	12/60	592
180.723	12/60	594
180.724	12/60	594
180.725	12/60	594
180.726	12/60	594
180.727	12/60	594
180.728	12/60	594
180.729	12/60	594
180.741	12/60	594
180.742	12/60	594
180.743	12/60	594
180.744	12/60	594
180.745	12/60	594
180.746	12/60	594
180.790	100/1000	592
180.791	100/1000	592
180.792	100/1000	592
180.793	100/1000	592
180.794	12/60	593
180.795	12/60	593
180.7951	60	593
180.796	12/60	593
180.797	1/10	593
180.7971	10	593
180.798	10	593
180.799	12/60	593
180.800	100/1000	596
180.810	100/1000	596
180.811	100/1000	596
180.812	100/1000	596
180.813	100/1000	596
180.814	100/1000	596
180.815	100/1000	596
180.820	25/100	597
180.821	25/100	597
180.822	25/100	597
180.823	25/100	597
180.830	10/100	596
180.831	10/100	596
180.832	10/100	596
180.833	10/100	596
180.840	50/1000	597
180.841	12/60	597
180.842	12/60	597
180.843	12/60	597
180.844	12/60	597
180.846	12/60	597
180.850	12/60	598
180.851	12/60	598
180.852	12/60	598
180.853	12/60	598
180.854	12/60	598
180.855	12/60	598
180.856	12/60	598
180.857	12/60	598
180.910	100/1000	595
180.911	100/1000	595
180.920	100/800	595
180.921	100/800	595

180		
Cat.numb.	Pack qty.	Page
180.930	100/1000	595
180.931	100/1000	595
180.940	100/1000	595
180.950	100/500	598
180.960	100/500	598
180.970	100/1000	595

190		
Cat.numb.	Pack qty.	Page
190.100	1/10	585
190.147B	50/500	583
190.2000FCG	100/600	582
190.2000FCGB	100/600	582
190.2000FCN	100/600	582
190.2000FCNB	100/600	582
190.2000FG	100/600	582
190.2000FGB	100/600	582
190.2000FGO	100/600	582
190.2000FN	100/600	582
190.2000FNB	100/600	582
190.2000LG	100/600	581
190.2000LGB	100/600	581
190.2000LN	100/600	581
190.2000LNB	100/600	581
190.2000LT	100/600	581
190.2000LTB	100/600	581
190.31	50/500	583
190.31B	50/500	583
190.31Z	50/500	583
190.3570ES	50/500	580
190.3570S	50/500	580
190.3585ES	50/500	580
190.3585S	50/500	580
190.363B	50/500	589
190.363N	50/500	589
190.366B	50	589
190.366N	50	589
190.376B	50/250	589
190.376N	50/250	589
190.378	500	589
190.5501/15TB	100	585
190.5740B1	10	584
190.5778/304T	20/200	583
190.5778/306L	20/200	583
190.5778/311T	20/200	583
190.5778/313T	20/200	583
190.5778/348	20/200	583
190.5778B	20/200	583
190.6000FCG	50/300	582
190.6000FCGB	50/300	582
190.6000FCN	50/300	582
190.6000FCNB	50/300	582
190.6000FCT	50/300	582
190.6000FCTB	50/300	582
190.6000FG	50/300	582
190.6000FGB	50/300	582
190.6000FGO	50/300	582
190.6000FN	50/300	582
190.6000FNB	50/300	582
190.6000FT	50/300	582

= IMQ or other quality marks = new product = make to order

190

Cat.numb.	Pack qty.	Page
190.6000FTB	50/300	582
190.6000LG	50/300	581
190.6000LGB	50/300	581
190.6000LN	50/300	581
190.6000LNB	50/300	581
190.6000LT	50/300	581
190.6000LTB	50/300	581
190.71	50/500	583
190.71B	50/500	583
190.7350Z	50/300	582
190.73B	50/500	583
190.73N	50/500	583
190.73Z	50/500	583
190.74B	50/500	583
190.74N	50/500	583
190.81	50/500	584
190.8200	50/300	584
190.8200T	50/300	584
190.CP70A	50/300	580
190.CP70B	50/300	580
190.CP85A	50/300	580
190.CP85B	50/300	580

191

Cat.numb.	Pack qty.	Page
191.5031	100/1000	585
191.5122	20/200	586
191.5124	50/500	586

195

Cat.numb.	Pack qty.	Page
195.115B	100/1000	587
195.135B	3000	587
195.200B	20/200	587
195.450B	20/200	588
195.450N	20/200	588
195.450P	20/200	588
195.565B	20/160	588
195.565N	20/160	588
195.565P	20/160	588

213

Cat.numb.	Pack qty.	Page
213.1630	10/50	22
213.1630.TR	10/50	25
213.1630P	10/50	23
213.1630P.TR	10/50	25
213.1631	10/50	22
213.1632	10/50	22
213.1633	10/50	22
213.1633.K	10/50	162
213.1633.TR	10/50	25
213.16332	10/50	22
213.16333	10/50	22
213.16334	10/50	22
213.16336	10/50	22

213

Cat.numb.	Pack qty.	Page
213.16338	10/50	22
213.1633P	10/50	23
213.1633P.K	10/50	162
213.1633P.TR	10/50	25
213.1634	10/50	22
213.1634P	10/50	23
213.1635	10/50	22
213.1635.K	10/50	162
213.1636	10/50	22
213.1636.K	10/50	162
213.16361	10/50	22
213.16362	10/50	22
213.16364	10/50	22
213.16365	10/50	22
213.16366	10/50	22
213.16367	10/50	22
213.1636P	10/50	23
213.1636P.K	10/50	162
213.1636P.TR	10/50	25
213.1636RV	10/50	26
213.1637	10/50	22
213.1637-7	10	200
213.1637.K	10/50	162
213.16372	10/50	22
213.16374	10/50	22
213.16375	10/50	22
213.16376	10/50	22
213.16377	10/50	22
213.1637P	10/50	23
213.1637P.K	10/50	162
213.1637P.TR	10/50	25
213.1637RV	10/50	26
213.1638	10/50	22
213.1638P	10/50	23
213.3230	10/40	22
213.3230F	10/40	23
213.3231	10/40	22
213.3232	10/40	22
213.3233	10/40	22
213.3233.K	10/40	162
213.32332	10/40	22
213.32333	10/40	22
213.32334	10/40	22
213.32336	10/40	22
213.32338	10/40	22
213.3233F	10/40	23
213.3233F.K	10/40	163
213.3234	10/40	22
213.3234F	10/40	23
213.3235	10/40	22
213.3235.K	10/40	162
213.3236	10/40	22
213.3236.K	10/40	162
213.32361	10/40	22
213.32362	10/40	22
213.32364	10/40	22
213.32365	10/40	22
213.32366	10/40	22
213.32367	10/40	22
213.3236F	10/40	23
213.3236F.K	10/40	163
213.3236RV	10/40	26

213

Cat.numb.	Pack qty.	Page
213.3237	10/40	22
213.3237-7	10	200
213.3237.K	10/40	162
213.32372	10/40	22
213.32374	10/40	22
213.32375	10/40	22
213.32376	10/40	22
213.32377	10/40	22
213.3237F	10/40	23
213.3237F.K	10/40	163
213.3237RV	10/40	26
213.3238	10/40	22
213.3238F	10/40	23
213.6330	6/24	24
213.6331	6/24	24
213.6332	6/24	24
213.6333	6/24	24
213.63332	6/24	24
213.63333	6/24	24
213.63334	6/24	24
213.63336	6/24	24
213.63338	6/24	24
213.6334	6/24	24
213.6335	6/24	24
213.6336	6/24	24
213.63361	6/24	24
213.63362	6/24	24
213.63364	6/24	24
213.63365	6/24	24
213.63366	6/24	24
213.63367	6/24	24
213.6337	6/24	24
213.63372	6/24	24
213.63374	6/24	24
213.63375	6/24	24
213.63376	6/24	24
213.63377	6/24	24
213.6338	6/24	24

214

Cat.numb.	Pack qty.	Page
214.1630	50	27
214.1633	50	27
214.1636	40	27
214.1637	30	27
214.3230	25	27
214.3233	25	27
214.3236	25	27
214.3237	20	27

215

Cat.numb.	Pack qty.	Page
215.812533		178
215.812536		178
215.812537		178
215.86333		178
215.86336	1	178
215.86337	1	178

216

Cat.numb.	Pack qty.	Page
216.81633	1/5	178
216.81636	1/5	178
216.81637	1/5	178
216.83233	1/5	178
216.83236		178
216.83237	1/5	178

218

Cat.numb.	Pack qty.	Page
218.12530	1/8	30
218.12531	1/8	30
218.12532	1/8	30
218.12533	1/8	30
218.12533.K	1/8	171
218.12533.KX	1/8	32
218.125332	1/8	30
218.125333	1/8	30
218.125334	1/8	30
218.125336	1/8	30
218.125338	1/8	30
218.12534	1/8	30
218.12535	1/8	30
218.12535.KX	1/8	32
218.12536	1/8	30
218.12536.K	1/8	171
218.12536.KX	1/8	32
218.125361	1/8	30
218.125362	1/8	30
218.125364	1/8	30
218.125365	1/8	30
218.125366	1/8	30
218.125367	1/8	30
218.12537	1/8	30
218.12537.K	1/8	171
218.12537.KX	1/8	32
218.125372	1/8	30
218.125374	1/8	30
218.125375	1/8	30
218.125376	1/8	30
218.125377	1/8	30
218.12538	1/8	30
218.1630	10/40	28
218.1630.TR	10/40	31
218.1630P	10/40	29
218.1630P.TR	10/40	31
218.1631	10/40	28
218.1632	10/40	28
218.1633	10/40	28
218.1633.K	10/40	169
218.1633.KX	10/40	32
218.1633.TR	10/40	31
218.16332	10/40	28
218.16333	10/40	28
218.16334	10/40	28
218.16336	10/40	28
218.16338	10/40	28
218.1633P	10/40	29
218.1633P.K	10/40	170
218.1633P.TR	10/40	31
218.1634	10/40	28

Index by product number

218		
Cat.numb.	Pack qty.	Page
218.1634P	10/40	29
218.1635	10/40	28
218.1635.KX	10/40	32
218.1636	10/40	28
218.1636.K	10/40	169
218.1636.KX	10/40	32
218.16361	10/40	28
218.16362	10/40	28
218.16364	10/40	28
218.16365	10/40	28
218.16366	10/40	28
218.16367	10/40	28
218.1636P	10/40	29
218.1636P.K	10/40	170
218.1636RV	10/40	31
218.1637	10/40	28
218.1637-7	10	200
218.1637.K	10/40	169
218.1637.KX	10/40	32
218.16372	10/40	28
218.16374	10/40	28
218.16375	10/40	28
218.16376	10/40	28
218.16377	10/40	28
218.1637P	10/40	29
218.1637P.K	10/40	170
218.1637RV	10/40	31
218.1638	10/40	28
218.1638P	10/40	29
218.3230	10/40	28
218.3230F	10/40	29
218.3231	10/40	28
218.3232	10/40	28
218.3233	10/40	28
218.3233.K	10/40	169
218.3233.KX	10/40	32
218.32332	10/40	28
218.32333	10/40	28
218.32334	10/40	28
218.32336	10/40	28
218.32338	10/40	28
218.3233F	10/40	29
218.3233F.K	10/40	170
218.3234	10/40	28
218.3234F	10/40	29
218.3235	10/40	28
218.3235.KX	10/40	32
218.3236	10/40	28
218.3236.K	10/40	169
218.3236.KX	10/40	32
218.32361	10/40	28
218.32362	10/40	28
218.32364	10/40	28
218.32364.KX	1/12	32
218.32364F	10/40	29
218.32365	10/40	28
218.32366	10/40	28
218.32367	10/40	28
218.3236F	10/40	29
218.3236F.K	10/40	170
218.3236RV	10/40	31
218.3237	10/40	28

218		
Cat.numb.	Pack qty.	Page
218.3237-7	10	200
218.3237.K	10/40	169
218.3237.KX	10/40	32
218.32372	10/40	28
218.32374	10/40	28
218.32375	10/40	28
218.32376	10/40	28
218.32377	10/40	28
218.3237F	10/40	29
218.3237F.K	10/40	170
218.3237RV	10/40	31
218.3238	10/40	28
218.3238F	10/40	29
218.6330	6/24	30
218.6331	6/24	30
218.6332	6/24	30
218.6333	6/24	30
218.6333.K	6/24	171
218.6333.KX	6/24	32
218.63332	6/24	30
218.63333	6/24	30
218.63334	6/24	30
218.63336	6/24	30
218.63338	6/24	30
218.6334	6/24	30
218.6335	6/24	30
218.6335.KX	6/24	32
218.6336	6/24	30
218.6336.K	6/24	171
218.6336.KX	6/24	32
218.63361	6/24	30
218.63362	6/24	30
218.63364	6/24	30
218.63365	6/24	30
218.63365.KX	6/24	32
218.63366	6/24	30
218.63367	6/24	30
218.6337	6/24	30
218.6337.K	6/24	171
218.6337.KX	6/24	32
218.63372	6/24	30
218.63374	6/24	30
218.63375	6/24	30
218.63376	6/24	30
218.63377	6/24	30
218.6338	6/24	30

221		
Cat.numb.	Pack qty.	Page
221.1630	10/100	27
221.1633	10/100	27
221.1636	10/100	27
221.1637	10/100	27
221.3230	10/60	27
221.3233	10/60	27
221.3236	10/60	27
221.3237	10/50	27

226		
Cat.numb.	Pack qty.	Page
226.1630	10/100	33
226.1633	10/100	33
226.1636	10/100	33
226.16367	10/100	33
226.1637	10/50	33
226.3230	10/40	33
226.3233	10/40	33
226.3236	10/40	33
226.32364	10/40	33
226.3237	10/40	33

230		
Cat.numb.	Pack qty.	Page
230.1600	10/100	156
230.1601	10/100	156
230.16010	10/100	156
230.16012	10/100	156
230.16014	10/100	156
230.16015	10/100	156
230.1602	10/100	156
230.1603	10/100	156
230.16030	10/100	156
230.16032	10/100	156
230.16034	10/100	156
230.16035	10/100	156
230.1604	10/100	156
230.3200	10/100	156
230.3201	10/100	156
230.32010	10/100	156
230.32012	10/100	156
230.32014	10/100	156
230.32015	10/100	156
230.3202	10/100	156
230.3203	10/100	156
230.32030	10/100	156
230.32032	10/100	156
230.32034	10/100	156
230.32035	10/100	156
230.3204	10/100	156

235		
Cat.numb.	Pack qty.	Page
235.1600	10/100	156
235.1601	10/100	156
235.16010	10/100	156
235.16012	10/100	156
235.16014	10/100	156
235.16015	10/100	156
235.1602	10/100	156
235.1603	10/100	156
235.16030	10/100	156
235.16032	10/100	156
235.16034	10/100	156
235.16035	10/100	156
235.1604	10/100	156
235.3200	10/100	156
235.3201	10/100	156
235.32010	10/100	156

235		
Cat.numb.	Pack qty.	Page
235.32012	10/100	156
235.32014	10/100	156
235.32015	10/100	156
235.3202	10/100	156
235.3203	10/100	156
235.32030	10/100	156
235.32032	10/100	156
235.32034	10/100	156
235.32035	10/100	156
235.3204	10/100	156

240		
Cat.numb.	Pack qty.	Page
240.1697-7	10	200
240.3297-7	10	200
240.6390T	4	41
240.6391T	4	41
240.6392T	4	41
240.63932T		41
240.63933T		41
240.63934T		41
240.63936T		41
240.63938T		41
240.6393T	4	41
240.6394T	4	41
240.6395T	4	41
240.63961T		41
240.63962T		41
240.63964T		41
240.63965T		41
240.63966T		41
240.63967T		41
240.6396T	4	41
240.63972T		41
240.63974T		41
240.63975T		41
240.63976T		41
240.63977T		41
240.6397T	4	41
240.6398T	4	41

242		
Cat.numb.	Pack qty.	Page
242.1690	10/100	36
242.1691	10/100	36
242.1692	10/60	36
242.1693	10/100	36
242.16932	10/100	36
242.16933		36
242.16934	10/100	36
242.16936		36
242.16938	10/100	36
242.1694	10/100	36
242.1695	10/60	36
242.1696	10/100	36
242.16961	10/100	36
242.16962	10/100	36
242.16964		36

● = IMQ or other quality marks ✔ = new product ✦ = make to order

242

Cat.numb.	Pack qty.	Page
242.16965	10/100	36
242.16966	10/100	36
242.16967	10/100	36
242.1697	10/60	36
242.16972	10/60	36
242.16974	10/60	36
242.16975		36
242.16976	10/60	36
242.16977		36
242.1698	10/100	36
242.3290	10/60	36
242.3291	10/60	36
242.3292	10/40	36
242.3293	10/60	36
242.32932		36
242.32933		36
242.32934	10/60	36
242.32936	10/60	36
242.32938	10/60	36
242.3294	10/60	36
242.3295	10/40	36
242.3296	10/60	36
242.32961		36
242.32962	10/60	36
242.32964	10/60	36
242.32965	10/60	36
242.32966	10/60	36
242.32967	10/60	36
242.3297	10/40	36
242.32972	10/40	36
242.32974	10	36
242.32975	10	36
242.32976	10	36
242.32977	10	36
242.3298	10/60	36

243

Cat.numb.	Pack qty.	Page
243.1690	10/50	34
243.1691	10/50	34
243.1692	10/50	34
243.1693	10/50	34
243.1693.K	10/50	163
243.1694	10/50	34
243.1695	10/50	34
243.1696	10/50	34
243.1696.K	10/50	163
243.16964	10/50	34
243.16965	10/50	34
243.1696RV	10/50	35
243.1697	10/50	34
243.1697-7	10	201
243.1697.K	10/50	163
243.16974	10/50	34
243.16975	10/50	34
243.1697RV	10/50	35
243.1698	10/50	34
243.3290	10/50	34
243.3291	10/50	34
243.3292	10/40	34

243

Cat.numb.	Pack qty.	Page
243.3293	10/50	34
243.3293.K	10/50	163
243.3294	10/50	34
243.3295	10/40	34
243.3296	10/50	34
243.3296.K	10/50	163
243.32964	10/50	34
243.32965	10/50	34
243.3296RV	10/50	35
243.3297	10/40	34
243.3297-7	10	201
243.3297.K	10/40	163
243.32974	10/40	34
243.32975	10/40	34
243.3297RV	10/40	35
243.3298	10/50	34
243.6390		34
243.6391		34
243.6392		34
243.6393	10	34
243.63932		34
243.63933		34
243.63934		34
243.63936		34
243.63938		34
243.6394		34
243.6395		34
243.6396	10	34
243.63961		34
243.63962		34
243.63964		34
243.63965		34
243.63966		34
243.63967		34
243.6397	10	34
243.63972		34
243.63974		34
243.63975		34
243.63976		34
243.63977		34
243.6398		34

245

Cat.numb.	Pack qty.	Page
245.12590T	1/4	42
245.12591T	1/4	42
245.12592T	1/4	42
245.125932T		42
245.125933T		42
245.125934T		42
245.125936T		42
245.125938T		42
245.12593T	1/4	42
245.12594T	1/4	42
245.12595T	1/4	42
245.125961T		42
245.125962T		42
245.125964T		42
245.125965T		42
245.125966T		42

245

Cat.numb.	Pack qty.	Page
245.125967T		42
245.12596T	1/4	42
245.125972T		42
245.125974T		42
245.125975T		42
245.125976T		42
245.125977T		42
245.12597T	1/4	42
245.12598T	1/4	42
245.1697-7	5	200
245.3297-7	5	200
245.6390T	4	42
245.6391T	4	42
245.6392T	4	42
245.63932T		42
245.63933T		42
245.63934T		42
245.63936T		42
245.63938T		42
245.6393T	4	42
245.6394T	4	42
245.6395T	4	42
245.63961T		42
245.63962T		42
245.63964T		42
245.63965T		42
245.63966T		42
245.63967T		42
245.6396T	4	42
245.63972T		42
245.63974T		42
245.63975T		42
245.63976T	4	42
245.63977T		42
245.6397T	4	42
245.6398T	4	42

246

Cat.numb.	Pack qty.	Page
246.125977	10	0

247

Cat.numb.	Pack qty.	Page
247.1690	10/100	40
247.1691	10/60	40
247.1692	10/50	40
247.1693	10/100	40
247.16932	10/100	40
247.16933		40
247.16934	10/100	40
247.16936	10/100	40
247.16938		40
247.1694	10/60	40
247.1695	10/50	40
247.1696	10/60	40
247.16961		40
247.16962		40
247.16964	10/60	40

247

Cat.numb.	Pack qty.	Page
247.16965	10/60	40
247.16966	10/60	40
247.16967	10/60	40
247.1697	10/50	40
247.16972	10/50	40
247.16974	10/50	40
247.16975		40
247.16976	10/50	40
247.16977		40
247.1698	10/100	40
247.3290	10/40	40
247.3291	10/40	40
247.3292	10/40	40
247.3293	10/40	40
247.32932		40
247.32933		40
247.32934	10/40	40
247.32936	10/40	40
247.32938		40
247.3294	10/40	40
247.3295	10/40	40
247.3296	10/40	40
247.32961	10/40	40
247.32962		40
247.32964	10/40	40
247.32965	10/40	40
247.32966	10/40	40
247.32967	10/40	40
247.3297	10/40	40
247.32972	10/40	40
247.32974	10/40	40
247.32975	10/40	40
247.32976	10	40
247.32977	10/40	40
247.3298	10/40	40
247.812593		179
247.812596		179
247.812597		179
247.81693	1/5	179
247.81696		179
247.81697	1/5	179
247.83293	1/5	179
247.83296		179
247.83297	1/5	179
247.86393		179
247.86396		179
247.86397	1	179

248

Cat.numb.	Pack qty.	Page
248.12590	10	38
248.12591	10	38
248.12592	10	38
248.12593	10	38
248.125932	10	38
248.125933	10	38
248.125934	10	38
248.125936	10	38
248.125938	10	38
248.12594	10	38

Index by product number

248			
Cat.numb.		Pack qty.	Page
248.12595	✦	10	38
248.12596		10	38
248.125961	✦	10	38
248.125962	✦	10	38
248.125964	✦	10	38
248.125965	✦	10	38
248.125966	✦	10	38
248.125967	✦	10	38
248.12597		10	38
248.12597.K	✦	10	172
248.125972	✦	10	38
248.125974	✦	10	38
248.125975	✦	10	38
248.125976	✦	10	38
248.125977	✦	10	38
248.12598	✦	10	38
248.1690	✦	10/50	37
248.1691	✦	10/50	37
248.1692	✦	10/50	37
248.1693		10/50	37
248.1693.K	✦	10/50	171
248.16932	✦	10/50	37
248.16933	✦	10/50	37
248.16934	✦	10/50	37
248.16936	✦	10/50	37
248.16938	✦	10/50	37
248.1694	✦	10/50	37
248.1695	✦	10/50	37
248.1696		10/50	37
248.1696.K	✦	10/50	171
248.16961	✦	10/50	37
248.16962	✦	10/50	37
248.16964	✦	10/50	37
248.16965	✦	10/50	37
248.16966	✦	10/50	37
248.16967	✦	10/50	37
248.1696RV		10/50	39
248.1697		10/50	37
248.1697-7	✔	10	201
248.1697.K		10/50	171
248.16972	✦	10/50	37
248.16974	✦	10/50	37
248.16975	✦	10/50	37
248.16976	✦	10/50	37
248.16977	✦	10/50	37
248.1697RV		10/50	39
248.1698	✦	10/50	37
248.3290	✦	10/50	37
248.3291	✦	10/50	37
248.3292	✦	10/40	37
248.3293		10/50	37
248.3293.K	✦	10/50	171
248.32932	✦	10/50	37
248.32933	✦	10/50	37
248.32934	✦	10/50	37
248.32936	✦	10/50	37
248.32938	✦	10/50	37
248.3294	✦	10/50	37
248.3295	✦	10/40	37
248.3296		10/50	37
248.3296.K	✦	10/50	171
248.32961	✦	10/50	37

248			
Cat.numb.		Pack qty.	Page
248.32962	✦	10/50	37
248.32964	✦	10/50	37
248.32965	✦	10/50	37
248.32966	✦	10/50	37
248.32967	✦	10/50	37
248.3296RV		10/50	39
248.3297		10/40	37
248.3297-7	✔	10	201
248.3297.K	✦	10/40	171
248.32972	✦	10/40	37
248.32974	✦	10/40	37
248.32975	✦	10/40	37
248.32976	✦	10/40	37
248.32977	✦	10/40	37
248.3297RV		10/40	39
248.3298	✦	10/50	37
248.6390	✦	10	38
248.6391	✦	10	38
248.6392	✦	10	38
248.6393		10	38
248.63932	✦	10	38
248.63933	✦	10	38
248.63934	✦	10	38
248.63936	✦	10	38
248.63938	✦	10	38
248.6394	✦	10	38
248.6395	✦	10	38
248.6396		10	38
248.63961	✦	10	38
248.63962	✦	10	38
248.63964	✦	10	38
248.63965	✦	10	38
248.63966	✦	10	38
248.63967	✦	10	38
248.6397		10	38
248.6397.K	✦	10	172
248.63972	✦	10	38
248.63974	✦	10	38
248.63975	✦	10	38
248.63976	✦	10	38
248.63977	✦	10	38
248.6398	✦	10	38

299			
Cat.numb.		Pack qty.	Page
299.1600-00	✦	1/10	415
299.1600-01	✦	1/10	415
299.1686-16		1/10	416
299.1693-00		1/10	415
299.1693-01		1/10	415
299.1693-02	✦	1/10	416
299.1693-04		1/10	416
299.1693-06		1/10	416
299.1693-10		1/10	416
299.1693-16		1/10	416
299.1696-02	✦	1/10	416
299.1696-04		1/10	416
299.1696-06		1/10	416
299.1696-10		1/10	416
299.1696-16		1/10	416

313			
Cat.numb.		Pack qty.	Page
313.1640		10/50	46
313.1640.TR	✦	10/50	49
313.1640H	✦	10/50	50
313.1640P		10/50	47
313.1640P.TR	✦	10/50	49
313.1641		10/50	46
313.1642		10/50	46
313.1643		10/50	46
313.1643.K		10/50	164
313.1643.TR		10/50	49
313.16432		10/50	46
313.16433		10/50	46
313.16434		10/50	46
313.16436		10/50	46
313.16438		10/50	46
313.1643H		10/50	50
313.1643H.K		10/50	165
313.1643P		10/50	47
313.1643P.K		10/50	164
313.1643P.TR		10/50	49
313.1644	✦	10/50	46
313.1644H	✦	10/50	50
313.1644P		10/50	47
313.1645		10/50	46
313.1645.K	✔	10/50	164
313.1646		10/50	46
313.1646.K	✦	10/50	164
313.16461		10/50	46
313.16462		10/50	46
313.16464		10/50	46
313.16465		10/50	46
313.16466		10/50	46
313.16467		10/50	46
313.1646H		10/50	50
313.1646H.K	✦	10/50	165
313.1646P		10/50	47
313.1646P.K	✦	10/50	164
313.1647		10/50	46
313.1647-7	✔	10	201
313.1647.K		10/50	164
313.16472		10/50	46
313.16474		10/50	46
313.16475		10/50	46
313.16476		10/50	46
313.16477		10/50	46
313.1647H		10/50	50
313.1647H.K	✦	10/50	165
313.1647P		10/50	47
313.1647P.K	✦	10/50	164
313.1648	✦	10/50	46
313.1648H	✦	10/50	50
313.1648P	✦	10/50	47
313.3240		10/40	46
313.3240F		10/40	47
313.3241		10/40	46
313.3242		10/40	46
313.3243		10/40	46
313.3243.K	✦	10/40	164
313.32432		10/40	46
313.32433		10/40	46
313.32434		10/40	46
313.32436		10/40	46

313			
Cat.numb.		Pack qty.	Page
313.32438		10/40	46
313.3243F		10/40	47
313.3243F.K		10/40	165
313.3244	✦	10/40	46
313.3244F		10/40	47
313.3245		10/40	46
313.3245.K	✔	10/40	164
313.3246		10/40	46
313.3246.K	✦	10/40	164
313.32461		10/40	46
313.32462		10/40	46
313.32464		10/40	46
313.32465		10/40	46
313.32466		10/40	46
313.32467		10/40	46
313.3246F		10/40	47
313.3246F.K		10/40	165
313.3247		10/40	46
313.3247-7	✔	10	201
313.3247.K		10/40	164
313.32472		10/40	46
313.32474		10/40	46
313.32475		10/40	46
313.32476		10/40	46
313.32477		10/40	46
313.3247F		10/40	47
313.3247F.K		10/40	165
313.3248	✦	10/40	46
313.3248F		10/40	47
313.6340	✦	6/24	48
313.6341	✦	6/24	48
313.6342	✦	6/24	48
313.6343		6/24	48
313.63432	✦	6/24	48
313.63433	✦	6/24	48
313.63434	✦	6/24	48
313.63436	✦	6/24	48
313.63438	✦	6/24	48
313.6344	✦	6/24	48
313.6345	✦	6/24	48
313.6346		6/24	48
313.63461	✦	6/24	48
313.63462	✦	6/24	48
313.63464	✦	6/24	48
313.63465	✦	6/24	48
313.63466	✦	6/24	48
313.63467	✦	6/24	48
313.6347		6/24	48
313.63472	✦	6/24	48
313.63474	✦	6/24	48
313.63475	✦	6/24	48
313.63476	✦	6/24	48
313.63477	✦	6/24	48
313.6348	✦	6/24	48

314			
Cat.numb.		Pack qty.	Page
314.1640	✦	40	51
314.1643		40	51
314.1646	✦	30	51

● = IMQ or other quality marks ✔ = new product ✦ = make to order

314

Cat.numb.	Pack qty.	Page
314.1647	25	51
314.3240	20	51
314.3243	20	51
314.3246	20	51
314.3247	15	51

315

Cat.numb.	Pack qty.	Page
315.812543		180
315.812546	1	180
315.812547		180
315.86343	1	180
315.86346		180
315.86347	1	180

316

Cat.numb.	Pack qty.	Page
316.81643	1/5	180
316.81646		180
316.81647	1/5	180
316.83243	1/5	180
316.83246		180
316.83247	1/5	180

318

Cat.numb.	Pack qty.	Page
318.12540	1/8	54
318.12541	1/8	54
318.12542	1/8	54
318.12543	1/8	54
318.12543.K	1/8	174
318.12543.KX	1/8	57
318.125432	1/8	54
318.125433	1/8	54
318.125434	1/8	54
318.125436	1/8	54
318.125438	1/8	54
318.12544	1/8	54
318.12545	1/8	54
318.12546	1/8	54
318.12546.K	1/8	174
318.12546.KX	1/8	57
318.125461	1/8	54
318.125462	1/8	54
318.125464	1/8	54
318.125465	1/8	54
318.125466	1/8	54
318.125467	1/8	54
318.12547	1/8	54
318.12547.K	1/8	174
318.12547.KX	1/8	57
318.125472	1/8	54
318.125474	1/8	54
318.125475	1/8	54
318.125476	1/8	54
318.125477	1/8	54

318

Cat.numb.	Pack qty.	Page
318.12548	1/8	54
318.1640	10/40	52
318.1640.TR	10/40	55
318.1640H	10/40	56
318.1640P	10/40	53
318.1640P.TR	10/40	55
318.1641	10/40	52
318.1642	10/40	52
318.1643	10/40	52
318.1643.K	10/40	172
318.1643.KX	10/40	57
318.1643.TR	10/40	55
318.16432	10/40	52
318.16433	10/40	52
318.16434	10/40	52
318.16436	10/40	52
318.16438	10/40	52
318.1643H	10/40	56
318.1643H.K	10/40	174
318.1643P	10/40	53
318.1643P.K	10/40	173
318.1643P.TR	10/40	55
318.1644	10/40	52
318.1644H	10/40	56
318.1644P	10/40	53
318.1645	10/40	52
318.1646	10/40	52
318.1646.K	10/40	172
318.1646.KX	10/40	57
318.16461	10/40	52
318.16462	10/40	52
318.16464	10/40	52
318.16465	10/40	52
318.16466	10/40	52
318.16467	10/40	52
318.1646H	10/40	56
318.1646H.K	10/40	174
318.1646P	10/40	53
318.1646P.K	10/40	173
318.1647	10/40	52
318.1647-7	10	201
318.1647.K	10/40	172
318.1647.KX	10/40	57
318.16472	10/40	52
318.16474	10/40	52
318.16475	10/40	52
318.16476	10/40	52
318.16477	10/40	52
318.1647H	10/40	56
318.1647H.K	10/40	174
318.1647P	10/40	53
318.1647P.K	10/40	173
318.1648	10/40	52
318.1648H	10/40	56
318.1648P	10/40	53
318.3240	10/40	52
318.3240F	10/40	53
318.3241	10/40	52
318.3242	10/40	52
318.3243	10/40	52
318.3243.K	10/40	172
318.3243.KX	10/40	57

318

Cat.numb.	Pack qty.	Page
318.32432	10/40	52
318.32433	10/40	52
318.32434	10/40	52
318.32436	10/40	52
318.32438	10/40	52
318.3243F	10/40	53
318.3243F.K	10/40	173
318.3244	10/40	52
318.3244F	10/40	53
318.3245	10/40	52
318.3246	10/40	52
318.3246.K	10/40	172
318.3246.KX	10/40	57
318.32461	10/40	52
318.32462	10/40	52
318.32464	10/40	52
318.32464.KX	1/12	57
318.32464F	10/40	53
318.32465	10/40	52
318.32466	10/40	52
318.32467	10/40	52
318.3246F	10/40	53
318.3246F.K	10/40	173
318.3247	10/40	52
318.3247-7	10	201
318.3247.K	10/40	172
318.3247.KX	10/40	57
318.32472	10/40	52
318.32474	10/40	52
318.32475	10/40	52
318.32476	10/40	52
318.32477	10/40	52
318.3247F	10/40	53
318.3247F.K	10/40	173
318.3248	10/40	52
318.3248F	10/40	53
318.6340	6/24	54
318.6341	6/24	54
318.6342	6/24	54
318.6343	6/24	54
318.6343.K	6/24	174
318.6343.KX	6/24	57
318.63432	6/24	54
318.63433	6/24	54
318.63434	6/24	54
318.63436	6/24	54
318.63438	6/24	54
318.6344	6/24	54
318.6346	6/24	54
318.6346.K	6/24	174
318.6346.KX	6/24	57
318.63461	6/24	54
318.63462	6/24	54
318.63464	6/24	54
318.63465	6/24	54
318.63466	6/24	54
318.63467	6/24	54
318.6347	6/24	54
318.6347.K	6/24	174
318.6347.KX	6/24	57
318.63472	6/24	54
318.63474	6/24	54

318

Cat.numb.	Pack qty.	Page
318.63475	6/24	54
318.63476	6/24	54
318.63477	6/24	54
318.6348	6/24	54

321

Cat.numb.	Pack qty.	Page
321.1640	10/100	51
321.1643	10/100	51
321.1646	10/100	51
321.1647	10/100	51
321.3240	10/50	51
321.3243	10/50	51
321.3246	10/50	51
321.3247	10/50	51

326

Cat.numb.	Pack qty.	Page
326.1640	10/100	58
326.1643	10/100	58
326.1646	10/100	58
326.1647	10/50	58
326.3240	10/40	58
326.3243	10/40	58
326.3246	10/40	58
326.32464	10/40	58
326.3247	10/40	58

330

Cat.numb.	Pack qty.	Page
330.1605	10/100	157
330.1606	10/100	157
330.16060	10/100	157
330.16062	10/100	157
330.16064	10/100	157
330.16065	10/100	157
330.1607	10/100	157
330.1608	10/100	157
330.16080	10/100	157
330.16082	10/100	157
330.16084	10/100	157
330.16085	10/100	157
330.1609	10/100	157
330.3205	10/100	157
330.3206	10/100	157
330.32060	10/100	157
330.32062	10/100	157
330.32064	10/100	157
330.32065	10/100	157
330.3207	10/100	157
330.3208	10/100	157
330.32080	10/100	157
330.32082	10/100	157
330.32084	10/100	157
330.32085	10/100	157
330.3209	10/100	157

Index by product number

335		
Cat.numb.	Pack qty.	Page
335.1605	10/100	157
335.1606	10/100	157
335.16060	10/100	157
335.16062	10/100	157
335.16064	10/100	157
335.16065	10/100	157
335.1607	10/100	157
335.1608	10/100	157
335.16080	10/100	157
335.16082	10/100	157
335.16084	10/100	157
335.16085	10/100	157
335.1609	10/100	157
335.3205	10/50	157
335.3206	10/50	157
335.32060	10/50	157
335.32062	10/50	157
335.32064	10/50	157
335.32065	10/50	157
335.3207	10/50	157
335.3208	10/50	157
335.32080	10/50	157
335.32082	10/50	157
335.32084	10/50	157
335.32085	10/50	157
335.3209	10/50	157

400		
Cat.numb.	Pack qty.	Page
400.1670	6	98
400.1672	6	98
400.1674	6	98
400.1675	6	98
400.1678	6	98
400.1679	6	98
400.1683	6	98
400.16832	6	98
400.16833	6	98
400.16834	6	98
400.16836	6	98
400.16838	6	98
400.1686	6	98
400.16861	6	98
400.16862	6	98
400.16864	6	98
400.16865	6	98
400.16866	6	98
400.16867	6	98
400.1687	6	98
400.16872	6	98
400.16874	6	98
400.16875	6	98
400.16876	6	98
400.16877	6	98
400.2416	6	106
400.2420	6	106
400.2421	6	106
400.2620	6	106
400.2621	6	106
400.3270	6	98

400		
Cat.numb.	Pack qty.	Page
400.3272	6	98
400.3274	6	98
400.3275	6	98
400.3278	6	98
400.3279	6	98
400.3283	6	98
400.32832	6	98
400.32833	6	98
400.32834	6	98
400.32836	6	98
400.32838	6	98
400.3286	6	98
400.32861	6	98
400.32862	6	98
400.32864	6	98
400.32865	6	98
400.32866	6	98
400.32867	6	98
400.3287	6	98
400.32872	6	98
400.32874	6	98
400.32875	6	98
400.32876	6	98
400.32877	6	98

401		
Cat.numb.	Pack qty.	Page
401.1670	6	102
401.1672	6	102
401.1674	6	102
401.1675	6	102
401.1678	6	102
401.1679	6	102
401.1683	6	102
401.16832	6	102
401.16833	6	102
401.16834	6	102
401.16836	6	102
401.16838	6	102
401.1686	6	102
401.16861	6	102
401.16862	6	102
401.16864	6	102
401.16865	6	102
401.16866	6	102
401.16867	6	102
401.1687	6	102
401.16872	6	102
401.16874	6	102
401.16875	6	102
401.16876	6	102
401.16877	6	102
401.3270	6	102
401.3272	6	102
401.3274	6	102
401.3275	6	102
401.3278	6	102
401.3279	6	102
401.3283	6	102
401.3286	6	102

401		
Cat.numb.	Pack qty.	Page
401.3287	6	102

402		
Cat.numb.	Pack qty.	Page
402.1670	1/6	133
402.1670-F	1/6	135
402.1672	1	133
402.1672-F	1	135
402.1674	1/6	133
402.1674-F	1/6	135
402.1675	1	133
402.1675-F	1/6	135
402.1678	1	133
402.1678-F	1	135
402.1679	1	133
402.1679-F	1	135
402.1683	1/6	133
402.1683-F	1/6	135
402.16832	1	133
402.16832-F	1	135
402.16833	1/6	133
402.16833-F	1	135
402.16836	1	133
402.16836-F	1	135
402.1686	1/6	133
402.1686-F	1/6	135
402.16861	1	133
402.16861-F	1	135
402.16862	1	133
402.16862-F	1	135
402.16864	1	133
402.16864-F	1	135
402.16865	1	133
402.16865-F	1	135
402.16866	1/6	133
402.16866-F	1	135
402.16867	1/6	133
402.16867-F	1/6	135
402.1687	1/6	133
402.1687-F	1/6	135
402.16872	1	133
402.16872-F	1	135
402.16874	1	133
402.16874-F	1	135
402.16875	1	133
402.16875-F	1	135
402.16876	1	133
402.16876-F	1	135
402.16877	1	133
402.16877-F	1	135
402.3270	1	133
402.3270-F	1	135
402.3272	1/6	133
402.3272-F	1	135
402.3274	1/6	133
402.3274-F	1	135
402.3275	1	133
402.3275-F	1/6	135
402.3278	1	133
402.3278-F	1	135

402		
Cat.numb.	Pack qty.	Page
402.3279	1	133
402.3279-F	1	135
402.3283	1/6	133
402.3283-F	1/6	135
402.32832	1	133
402.32832-F	1	135
402.32833	1	133
402.32833-F	1	135
402.32836	1	133
402.32836-F	1	135
402.3286	1/6	133
402.3286-F	1/6	135
402.32861	1	133
402.32861-F	1	135
402.32862	1/6	133
402.32862-F	1	135
402.32864	1/6	133
402.32864-F	1/6	135
402.32865	1/6	133
402.32865-F	1/6	135
402.32866	1/6	133
402.32866-F	1	135
402.32867	1	133
402.32867-F	1	135
402.3287	1/6	133
402.3287-F	1/6	135
402.32872	1	133
402.32872-F	1	135
402.32874	1	133
402.32874-F	1/6	135
402.32875	1	133
402.32875-F	1/6	135
402.32876	1	133
402.32876-F	1	135
402.32877	1	133
402.32877-F	1	135
402.6370	1	133
402.6370-F	1	135
402.6372	1	133
402.6372-F	1	135
402.6374	1	133
402.6374-F	1	135
402.6375	1	133
402.6375-F	1	135
402.6378	1	133
402.6378-F	1	135
402.6379	1	133
402.6379-F	1	135
402.6383	1	133
402.6383-F	1	135
402.63832	1	133
402.63832-F	1	135
402.63833	1	133
402.63833-F	1	135
402.63836	1	133
402.63836-F	1	135
402.6386	1	133
402.6386-F	1	135
402.63861	1	133
402.63861-F	1	135
402.63862	1	133
402.63862-F	1	135

402		
Cat.numb.	Pack qty.	Page
402.63864	1	133
402.63864-F	1	135
402.63865	1	133
402.63865-F	1	135
402.63866	1	133
402.63866-F	1	135
402.63867	1	133
402.63867-F	1	135
402.6387	1	133
402.6387-F	1	135
402.63872	1	133
402.63872-F	1	135
402.63874	1	133
402.63874-F	1	135
402.63875	1	133
402.63875-F	1	135
402.63876	1	133
402.63876-F	1	135
402.63877	1	133
402.63877-F	1	135

403		
Cat.numb.	Pack qty.	Page
403.1670	1/6	134
403.1670-F	1	136
403.1670-M	1/6	137
403.1672	1	134
403.1672-F	1	136
403.1672-M	1/6	137
403.1674	1/6	134
403.1674-F	1	136
403.1674-M	1/6	137
403.1675	1	134
403.1675-F	1	136
403.1675-M	1/6	137
403.1678	1	134
403.1678-F	1/6	136
403.1678-M	1/6	137
403.1679	1	134
403.1679-F	1	136
403.1679-M	1/6	137
403.1683	1/6	134
403.1683-F	1/6	136
403.1683-M	1/6	137
403.16832	1	134
403.16832-F	1	136
403.16833	1	134
403.16833-F	1	136
403.16836	1	134
403.16836-F	1	136
403.1686	1/6	134
403.1686-F	1/6	136
403.1686-M	1/6	137
403.16861	1	134
403.16861-F	1	136
403.16862	1	134
403.16862-F	1	136
403.16864	1	134
403.16864-F	1	136
403.16864-M	1	137

403		
Cat.numb.	Pack qty.	Page
403.16865	1	134
403.16865-F	1	136
403.16865-M	1	137
403.16866	1	134
403.16866-F	1	136
403.16867	1	134
403.16867-F	1	136
403.1687	1/6	134
403.1687-F	1/6	136
403.1687-M	1/6	137
403.16872	1	134
403.16872-F	1	136
403.16874	1	134
403.16874-F	1	136
403.16874-M	1	137
403.16875	1	134
403.16875-F	1	136
403.16875-M	1	137
403.16876	1	134
403.16876-F	1	136
403.16877	1	134
403.16877-F	1	136
403.2416	1/6	142
403.2420	1/6	142
403.2421	1/6	142
403.2620	1/6	142
403.2621	1/6	142
403.3270	1/6	134
403.3270-F	1/6	136
403.3270-M	1/6	137
403.3272	1	134
403.3272-F	1	136
403.3272-M	1/6	137
403.3274	1	134
403.3274-F	1	136
403.3274-M	1/6	137
403.3275	1	134
403.3275-F	1	136
403.3275-M	1/6	137
403.3278	1	134
403.3278-F	1	136
403.3278-M	1/6	137
403.3279	1	134
403.3279-F	1	136
403.3279-M	1/6	137
403.3283	1/6	134
403.3283-F	1/6	136
403.3283-M	1/6	137
403.32832	1	134
403.32832-F	1	136
403.32833	1	134
403.32833-F	1	136
403.32836	1	134
403.32836-F	1	136
403.3286	1/6	134
403.3286-F	1/6	136
403.3286-M	1/6	137
403.32861	1	134
403.32861-F	1	136
403.32862	1	134
403.32862-F	1	136
403.32864	1/6	134

403		
Cat.numb.	Pack qty.	Page
403.32864-F	1	136
403.32864-M	1	137
403.32865	1	134
403.32865-F	1	136
403.32865-M	1	137
403.32866	1	134
403.32866-F	1	136
403.32867	1	134
403.32867-F	1	136
403.3287	1/6	134
403.3287-F	1/6	136
403.3287-M	1/6	137
403.32872	1	134
403.32872-F	1	136
403.32874	1	134
403.32874-F	1/6	136
403.32874-M	1	137
403.32875	1	134
403.32875-F	1	136
403.32875-M	1	137
403.32876	1	134
403.32876-F	1	136
403.32877	1	134
403.32877-F	1	136
403.6370	1	134
403.6370-F	1	136
403.6370-M	1	137
403.6372	1	134
403.6372-F	1	136
403.6372-M	1	137
403.6374	1	134
403.6374-F	1	136
403.6374-M	1	137
403.6375	1	134
403.6375-F	1	136
403.6375-M	1	137
403.6378	1	134
403.6378-F	1	136
403.6378-M	1	137
403.6379	1	134
403.6379-F	1	136
403.6379-M	1	137
403.6383	1	134
403.6383-F	1	136
403.6383-M	1	137
403.63832	1	134
403.63832-F	1	136
403.63833	1	134
403.63833-F	1	136
403.63836	1	134
403.63836-F	1	136
403.6386	1	134
403.6386-F	1	136
403.6386-M	1	137
403.63861	1	134
403.63861-F	1	136
403.63862	1	134
403.63862-F	1	136
403.63864	1	134
403.63864-F	1	136
403.63864-M	1	137
403.63865	1	134

403		
Cat.numb.	Pack qty.	Page
403.63865-F	1	136
403.63865-M	1	137
403.63866	1	134
403.63866-F	1	136
403.63867	1	134
403.63867-F	1	136
403.6387	1	134
403.6387-F	1	136
403.6387-M	1	137
403.63872	1	134
403.63872-F	1	136
403.63874	1	134
403.63874-F	1	136
403.63874-M	1	137
403.63875	1	134
403.63875-F	1	136
403.63875-M	1	137
403.63876	1	134
403.63876-F	1	136
403.63877	1	134
403.63877-F	1	136
403.AMR1683	1	150
403.AMR1683-F	1	151
403.AMR1683-M	1	152
403.AMR1686	1	150
403.AMR1686-F	1	151
403.AMR1686-M	1	152
403.AMR1687	1	150
403.AMR1687-F	1	151
403.AMR1687-M	1	152
403.AMR3283	1	150
403.AMR3283-F	1	151
403.AMR3283-M	1	152
403.AMR3286	1	150
403.AMR3286-F	1	151
403.AMR3286-M	1	152
403.AMR32864	1	150
403.AMR32864-F	1	151
403.AMR32864-M	1	152
403.AMR3287	1	150
403.AMR3287-F	1	151
403.AMR3287-M	1	152
403.AMR6383	1	150
403.AMR6383-F	1	151
403.AMR6383-M	1	152
403.AMR6386	1	150
403.AMR6386-F	1	151
403.AMR6386-M	1	152
403.AMR6387	1	150
403.AMR6387-F	1	151
403.AMR6387-M	1	152

405		
Cat.numb.	Pack qty.	Page
405.1670	6	99
405.1672	6	99
405.1674	6	99
405.1675	6	99
405.1678	6	99
405.1679	6	99

Index by product number

405		
Cat.numb.	Pack qty.	Page
405.1683	6	99
405.16832	6	99
405.16833	6	99
405.16834	6	99
405.16836	6	99
405.16838	6	99
405.1686	6	99
405.16861	6	99
405.16862	6	99
405.16864	6	99
405.16865	6	99
405.16866	6	99
405.16867	6	99
405.1687	6	99
405.16872	6	99
405.16874	6	99
405.16875	6	99
405.16876	6	99
405.16877	6	99
405.2416	6	106
405.2420	6	106
405.2421	6	106
405.2620	6	106
405.2621	6	106
405.3270	6	99
405.3272	6	99
405.3274	6	99
405.3275	6	99
405.3278	6	99
405.3279	6	99
405.3283	6	99
405.32832	6	99
405.32833	6	99
405.32834	6	99
405.32836	6	99
405.32838	6	99
405.3286	6	99
405.32861	6	99
405.32862	6	99
405.32864	6	99
405.32865	6	99
405.32866	6	99
405.32867	6	99
405.3287	6	99
405.32872	6	99
405.32874	6	99
405.32875	6	99
405.32876	6	99
405.32877	6	99
405.6370	1/6	99
405.6372	1/6	99
405.6374	1/6	99
405.6375	1/6	99
405.6378	1/6	99
405.6379	1/6	99
405.6383	1/6	99
405.63833	1/6	99
405.63836	1/6	99
405.6386	1/6	99
405.63865	1/6	99
405.63866	1/6	99
405.63867	1/6	99

405		
Cat.numb.	Pack qty.	Page
405.6387	1/6	99
405.63875	1/6	99
405.63876	1/6	99
405.63877	1/6	99

406		
Cat.numb.	Pack qty.	Page
406.1670	6	103
406.1672	6	103
406.1674	6	103
406.1675	6	103
406.1678	6	103
406.1679	6	103
406.1683	6	103
406.16832	6	103
406.16833	6	103
406.16834	6	103
406.16836	6	103
406.16838	6	103
406.1686	6	103
406.16861	6	103
406.16862	6	103
406.16864	6	103
406.16865	6	103
406.16866	6	103
406.16867	6	103
406.1687	6	103
406.16872	6	103
406.16874	6	103
406.16875	6	103
406.16876	6	103
406.16877	6	103
406.3270	6	103
406.3272	6	103
406.3274	6	103
406.3275	6	103
406.3278	6	103
406.3279	6	103
406.3283	6	103
406.3286	6	103
406.3287	6	103

409		
Cat.numb.	Pack qty.	Page
409.0400	1/6	109
409.0403	1/6	108
409.0404	1/6	108
409.0405	1/6	108
409.0407	1/6	108
409.0411	1/6	108
409.0412	1/6	108
409.0413	1/6	108
409.0417	1/6	108
409.0421	1/6	108
409.0424	1/6	108
409.0427	1/6	108
409.0428	1/6	108
409.0429	1/6	108

409		
Cat.numb.	Pack qty.	Page
409.1403	1/6	108
409.1404	1/6	108
409.1405	1/6	108
409.1407	1/6	108
409.1411	1/6	108
409.1412	1/6	108
409.1413	1/6	108
409.1417	1/6	108
409.1421	1/6	108
409.1424	1/6	108
409.1427	1/6	108
409.1428	1/6	108
409.1429	1/6	108
409.2403	1/6	108
409.2404	1/6	108
409.2405	1/6	108
409.2407	1/6	108
409.2411	1/6	108
409.2412	1/6	108
409.2413	1/6	108
409.2417	1/6	108
409.2421	1/6	108
409.2424	1/6	108
409.2427	1/6	108
409.2428	1/6	108
409.2429	1/6	108
409.3403	1/6	108
409.3404	1/6	108
409.3405	1/6	108
409.3407	1/6	108
409.3411	1/6	108
409.3412	1/6	108
409.3413	1/6	108
409.3417	1/6	108
409.3421	1/6	108
409.3424	1/6	108
409.3427	1/6	108
409.3428	1/6	108
409.3429	1/6	108

413		
Cat.numb.	Pack qty.	Page
413.1660	10/100	59
413.1660F	10/100	61
413.1660H	10/100	62
413.1661	10/100	59
413.1662	10/100	59
413.1663	10/100	59
413.1663.K	10/100	166
413.16632	10/100	59
413.16633	10/100	59
413.16634	10/100	59
413.16636	10/100	59
413.16638	10/100	59
413.1663F	10/100	61
413.1663F.K	10/100	168
413.1663H	10/100	62
413.1663H.K	10/100	167
413.1664	10/100	59
413.1664F	10/100	61

413		
Cat.numb.	Pack qty.	Page
413.1664H	10/100	62
413.1665	10/100	59
413.1666	10/100	59
413.1666.K	10/100	166
413.16661	10/100	59
413.16662	10/100	59
413.16664	10/100	59
413.16665	10/100	59
413.16666	10/100	59
413.16667	10/100	59
413.1666F	10/100	61
413.1666F.K	10/100	168
413.1666H	10/100	62
413.1666H.K	10/100	167
413.1667	10/100	59
413.1667-7	10	201
413.1667.K	10/100	166
413.16672	10/100	59
413.16674	10/100	59
413.16675	10/100	59
413.16676	10/100	59
413.16677	10/100	59
413.1667F	10/100	61
413.1667F.K	10/100	168
413.1667H	10/100	62
413.1667H.K	10/100	167
413.1668	10/100	59
413.1668F	10/100	61
413.1668H	10/100	62
413.3260	10/50	59
413.3260F	10/50	61
413.3261	10/50	59
413.3262	10/50	59
413.3263	10/50	59
413.3263.K	10/50	166
413.32632	10/50	59
413.32633	10/50	59
413.32634	10/50	59
413.32636	10/50	59
413.32638	10/50	59
413.3263F	10/50	61
413.3263F.K	10/50	168
413.3264	10/50	59
413.3264F	10/50	61
413.3265	10/50	59
413.3266	10/50	59
413.3266.K	10/50	166
413.32661	10/50	59
413.32662	10/50	59
413.32664	10/50	59
413.32665	10/50	59
413.32666	10/50	59
413.32667	10/50	59
413.3266F	10/50	61
413.3266F.K	10/50	168
413.3267	10/50	59
413.3267-7	10	201
413.3267.K	10/50	166
413.32672	10/50	59
413.32674	10/50	59
413.32675	10/50	59
413.32676	10/50	59

● = IMQ or other quality marks ✔ = new product ✦ = make to order

413		
Cat.numb.	Pack qty.	Page
413.32677	10/50	59
413.3267F	10/50	61
413.3267F.K	10/50	168
413.3268	10/50	59
413.3268F	10/50	61
413.6360		59
413.6361		59
413.6362	6/30	59
413.6363	6/30	59
413.63632		59
413.63633		59
413.63634		59
413.63636		59
413.63638		59
413.6364	6/30	59
413.6365		59
413.6366	6/30	59
413.63661		59
413.63662		59
413.63664		59
413.63665		59
413.63666		59
413.63667		59
413.6367	6/30	59
413.63672		59
413.63674		59
413.63675		59
413.63676		59
413.63677		59
413.6368		59

418		
Cat.numb.	Pack qty.	Page
418.12560	1/10	66
418.12561	1/10	66
418.12562	1/10	66
418.12563	1/10	66
418.125632	1/10	66
418.125633	1/10	66
418.125634	1/10	66
418.125636	1/10	66
418.125638	1/10	66
418.12564	1/10	66
418.12565	1/10	66
418.12566	1/10	66
418.125661	1/10	66
418.125662	1/10	66
418.125664	1/10	66
418.125665	1/10	66
418.125666	1/10	66
418.125667	1/10	66
418.12567	1/10	66
418.125672	1/10	66
418.125674	1/10	66
418.125675	1/10	66
418.125676	1/10	66
418.125677	1/10	66
418.12568	1/10	66
418.1660	10/100	65
418.1660F	10/100	68

418		
Cat.numb.	Pack qty.	Page
418.1660H	10/100	69
418.1661	10/100	65
418.1662	10/100	65
418.1663	10/100	65
418.1663.K	10/100	175
418.16632	10/100	65
418.16633	10/100	65
418.16634	10/100	65
418.16636	10/100	65
418.16638	10/100	65
418.1663F	10/100	68
418.1663F.K	10/100	176
418.1663H	10/100	69
418.1663H.K	10/100	176
418.1664	10/100	65
418.1664F	10/100	68
418.1664H	10/100	69
418.1665	10/100	65
418.1666	10/100	65
418.1666.K	10/100	175
418.16661	10/100	65
418.16662	10/100	65
418.16664	10/100	65
418.16665	10/100	65
418.16666	10/100	65
418.16667	10/100	65
418.1666F	10/100	68
418.1666F.K	10/100	176
418.1666H	10/100	69
418.1666H.K	10/100	176
418.1667	10/100	65
✔ 418.1667-7	10	201
418.1667.K	10/100	175
418.16672	10/100	65
418.16674	10/100	65
418.16675	10/100	65
418.16676	10/100	65
418.16677	10/100	65
418.1667F	10/100	68
418.1667F.K	10/100	176
418.1667H	10/100	69
418.1667H.K	10/100	176
418.1668	10/100	65
418.1668F	10/100	68
418.1668H	10/100	69
418.3260	10/50	65
418.3260F	10/50	68
418.3261	10/50	65
418.3263	10/50	65
418.3263.K	10/50	175
418.32632	10/50	65
418.32633	10/50	65
418.32634	10/50	65
418.32636	10/50	65
418.32638	10/50	65
418.3263F	10/50	68
418.3263F.K	10/50	176
418.3264	10/50	65
418.3264F	10/50	68
418.3265	10/50	65
418.3266	10/50	65
418.3266.K	10/50	175

418		
Cat.numb.	Pack qty.	Page
418.32661	10/50	65
418.32662	10/50	65
418.32664	10/50	65
418.32665	10/50	65
418.32666	10/50	65
418.32667	10/50	65
418.3266F	10/50	68
418.3266F.K	10/50	176
418.3267	10/50	65
✔ 418.3267-7	10	201
418.3267.K	10/50	175
418.32672	10/50	65
418.32674	10/50	65
418.32675	10/50	65
418.32676	10/50	65
418.32677	10/50	65
418.3267F	10/50	68
418.3267F.K	10/50	176
418.3268	10/50	65
418.3268F	10/50	68
418.6360	6/30	66
418.6361	6/30	66
418.6362	6/30	66
418.6363	6/30	66
418.63632	6/30	66
418.63633	6/30	66
418.63634	6/30	66
418.63636	6/30	66
418.63638	6/30	66
418.6364	6/30	66
418.6365	6/30	66
418.6366	6/30	66
418.63661	6/30	66
418.63662	6/30	66
418.63664	6/30	66
418.63665	6/30	66
418.63666	6/30	66
418.63667	6/30	66
418.6367	6/30	66
418.6367.K	6/30	175
418.63672	6/30	66
418.63674	6/30	66
418.63675	6/30	66
418.63676	6/30	66
418.63677	6/30	66
418.6368	6/30	66

422		
Cat.numb.	Pack qty.	Page
422.1660	10/100	64
422.1660/R	10/100	64
422.1661	10/100	64
422.1662	10/100	64
422.1663	10/100	64
422.1663.K	10/100	169
422.1663/R	10/100	64
422.1663/R.K	10/100	168
422.16632	10/100	64
422.16633	10/100	64
422.16634	10/100	64

422		
Cat.numb.	Pack qty.	Page
422.16636	10/100	64
422.16638	10/100	64
422.1664	10/100	64
422.1665	10/100	64
422.1666	10/100	64
422.16661	10/100	64
422.16662	10/100	64
422.16664	10/100	64
422.16665	10/100	64
422.16666	10/100	64
422.16667	10/100	64
422.1667	10/100	64
422.16672	10/100	64
422.16674	10/100	64
422.16675	10/100	64
422.16676	10/100	64
422.16677	10/100	64
422.1668	10/100	64
422.1668/R	10/100	64
422.3260	10/50	64
422.3261	10/50	64
422.3262	10/50	64
422.3263	10/50	64
422.32632	10/50	64
422.32633	10/50	64
422.32634	10/50	64
422.32636	10/50	64
422.32638	10/50	64
422.3264	10/50	64
422.3265	10/50	64
422.3266	10/50	64
422.32661	10/50	64
422.32662	10/50	64
422.32664	10/50	64
422.32665	10/50	64
422.32666	10/50	64
422.32667	10/50	64
422.3267	10/50	64
422.3267.K	10/50	169
422.32672	10/50	64
422.32674	10/50	64
422.32675	10/50	64
422.32676	10/50	64
422.32677	10/50	64
422.3268	10/50	64

423		
Cat.numb.	Pack qty.	Page
423.6360		60
423.6361		60
423.6362		60
423.6363	6/30	60
423.63632		60
423.63633		60
423.63634		60
423.63636		60
423.63638		60
423.6364		60
423.6365		60
423.6366	6/30	60

Index by product number

423		
Cat.numb.	Pack qty.	Page
423.63661		60
423.63662		60
423.63664		60
423.63665		60
423.63666		60
423.63667		60
423.6367	6/30	60
423.63672		60
423.63674		60
423.63675		60
423.63676		60
423.63677		60
423.6368		60

427		
Cat.numb.	Pack qty.	Page
427.1660	10/100	71
427.1661	10/100	71
427.1662	10/100	71
427.1663	10/100	71
427.16632	10/100	71
427.16633	10/100	71
427.16634	10/100	71
427.16636	10/100	71
427.16638	10/100	71
427.1664	10/100	71
427.1665	10/100	71
427.1666	10/100	71
427.16661	10/100	71
427.16662	10/100	71
427.16664	10/100	71
427.16665	10/100	71
427.16666	10/100	71
427.16667	10/100	71
427.1667	10/100	71
427.16672	10/100	71
427.16674	10/100	71
427.16675	10/100	71
427.16676	10/100	71
427.16677	10/100	71
427.1668	10/100	71
427.3260	10/50	71
427.3261	10/50	71
427.3262	10/50	71
427.3263	10/50	71
427.32632	10/50	71
427.32633	10/50	71
427.32634	10/50	71
427.32636	10/50	71
427.32638	10/50	71
427.3264	10/50	71
427.3265	10/50	71
427.3266	10/50	71
427.32661	10/50	71
427.32662	10/50	71
427.32664	10/50	71
427.32665	10/50	71
427.32666	10/50	71
427.32667	10/50	71
427.3267	10/50	71

427		
Cat.numb.	Pack qty.	Page
427.32672	10/50	71
427.32674	10/50	71
427.32675	10/50	71
427.32676	10/50	71
427.32677	10/50	71
427.3268	10/50	71
427.812563		181
427.812566		181
427.812567		181
427.81663	1/5	181
427.81666		181
427.81667	1/5	181
427.83263	1/5	181
427.83266		181
427.83267	1/5	181
427.86363		181
427.86366		181
427.86367	1	181

428		
Cat.numb.	Pack qty.	Page
428.12560	1/10	67
428.12561	1/10	67
428.12562	1/10	67
428.12563	1/10	67
428.125632	1/10	67
428.125633	1/10	67
428.125634	1/10	67
428.125636	1/10	67
428.125638	1/10	67
428.12564	1/10	67
428.12565	1/10	67
428.12566	1/10	67
428.125661	1/10	67
428.125662	1/10	67
428.125664	1/10	67
428.125665	1/10	67
428.125666	1/10	67
428.125667	1/10	67
428.12567	1/10	67
428.125672	1/10	67
428.125674	1/10	67
428.125675	1/10	67
428.125676	1/10	67
428.125677	1/10	67
428.12568	1/10	67
428.6360	6/30	67
428.6361	6/30	67
428.6362	6/30	67
428.6363	6/30	67
428.63632	6/30	67
428.63633	6/30	67
428.63634	6/30	67
428.63636	6/30	67
428.63638	6/30	67
428.6364	6/30	67
428.6365	6/30	67
428.6366	6/30	67
428.63661	6/30	67
428.63662	6/30	67

428		
Cat.numb.	Pack qty.	Page
428.63664	6/30	67
428.63665	6/30	67
428.63666	6/30	67
428.63667	6/30	67
428.6367	6/30	67
428.63672	6/30	67
428.63674	6/30	67
428.63675	6/30	67
428.63676	6/30	67
428.63677	6/30	67
428.6368	6/30	67

430		
Cat.numb.	Pack qty.	Page
430.1615	10/100	158
430.1615/R	10/100	158
430.1616	10/100	158
430.1616/R	10/100	158
430.16160	10/100	158
430.16160/R	10/100	158
430.16162	10/100	158
430.16162/R	10/100	158
430.16164	10/100	158
430.16164/R	10/100	158
430.16165	10/100	158
430.16165/R	10/100	158
430.1617	10/100	158
430.1617/R	10/100	158
430.1618	10/100	158
430.1618/R	10/100	158
430.16180	10/100	158
430.16180/R	10/100	158
430.16182	10/100	158
430.16182/R	10/100	158
430.16184	10/100	158
430.16184/R	10/100	158
430.16185	10/100	158
430.16185/R	10/100	158
430.1619	10/100	158
430.1619/R	10/100	158
430.3215	10/100	158
430.3215/R	10/100	158
430.3216	10/100	158
430.3216/R	10/100	158
430.32160	10/100	158
430.32160/R	10/100	158
430.32162	10/100	158
430.32162/R	10/100	158
430.32164	10/100	158
430.32164/R	10/100	158
430.32165	10/100	158
430.32165/R	10/100	158
430.3217	10/100	158
430.3217/R	10/100	158
430.3218	10/100	158
430.3218/R	10/100	158
430.32180	10/100	158
430.32180/R	10/100	158
430.32182	10/100	158
430.32182/R	10/100	158

430		
Cat.numb.	Pack qty.	Page
430.32184	10/100	158
430.32184/R	10/100	158
430.32185	10/100	158
430.32185/R	10/100	158
430.3219	10/100	158
430.3219/R	10/100	158

435		
Cat.numb.	Pack qty.	Page
435.1615	10/100	159
435.1615/R	10/100	159
435.1616	10/100	159
435.1616/R	10/100	159
435.16160	10/100	159
435.16160/R	10/100	159
435.16162	10/100	159
435.16162/R	10/100	159
435.16164	10/100	159
435.16164/R	10/100	159
435.16165	10/100	159
435.16165/R	10/100	159
435.1617	10/100	159
435.1617/R	10/100	159
435.1618	10/100	159
435.1618/R	10/100	159
435.16180	10/100	159
435.16180/R	10/100	159
435.16182	10/100	159
435.16182/R	10/100	159
435.16184	10/100	159
435.16184/R	10/100	159
435.16185	10/100	159
435.16185/R	10/100	159
435.1619	10/100	159
435.1619/R	10/100	159
435.3215	10/100	159
435.3215/R	10/100	159
435.3216	10/100	159
435.3216/R	10/100	159
435.32160	10/100	159
435.32160/R	10/100	159
435.32162	10/100	159
435.32162/R	10/100	159
435.32164	10/100	159
435.32164/R	10/100	159
435.32165	10/100	159
435.32165/R	10/100	159
435.3217	10/100	159
435.3217/R	10/100	159
435.3218	10/100	159
435.3218/R	10/100	159
435.32180	10/100	159
435.32180/R	10/100	159
435.32182	10/100	159
435.32182/R	10/100	159
435.32184	10/100	159
435.32184/R	10/100	159
435.32185	10/100	159
435.32185/R	10/100	159
435.3219	10/100	159

= IMQ or other quality marks ✔ = new product ✦ = make to order

435		
Cat.numb.	Pack qty.	Page
435.3219/R	10/100	159

452		
Cat.numb.	Pack qty.	Page
452.1660	10/100	63
452.1661	10/60	63
452.1662	10/60	63
452.1663	10/100	63
452.16632		63
452.16633		63
452.16634		63
452.16636		63
452.16638		63
452.1664	10/60	63
452.1665	10/60	63
452.1666	10/60	63
452.16661	10/60	63
452.16662		63
452.16664		63
452.16665		63
452.16666		63
452.16667		63
452.1667	10/60	63
452.16672	10/60	63
452.16674		63
452.16675		63
452.16676		63
452.16677		63
452.1668	10/100	63
452.3260	10/40	63
452.3261	10/40	63
452.3262	10/40	63
452.3263	10/40	63
452.32632		63
452.32633		63
452.32634	10/40	63
452.32636		63
452.32638		63
452.3264	10/40	63
452.3265	10/40	63
452.3266	10/40	63
452.32661		63
452.32662		63
452.32664	10/40	63
452.32665	10/40	63
452.32666		63
452.32667		63
452.3267	10/40	63
452.32672	10	63
452.32674	10	63
452.32675	10	63
452.32676	10	63
452.32677	10	63
452.3268	10/40	63

457		
Cat.numb.	Pack qty.	Page
457.1660	10/60	70

457		
Cat.numb.	Pack qty.	Page
457.1661	10/50	70
457.1662	10/50	70
457.1663	10/60	70
457.16632		70
457.16633		70
457.16634		70
457.16636		70
457.16638		70
457.1664	10/50	70
457.1665	10/50	70
457.1666	10/50	70
457.16661	10/50	70
457.16662		70
457.16664		70
457.16665		70
457.16666	10/50	70
457.16667		70
457.1667	10/50	70
457.16672		70
457.16674	10/50	70
457.16675		70
457.16676		70
457.16677		70
457.1668	10/60	70
457.3260	10/40	70
457.3261	10/40	70
457.3262	10/40	70
457.3263	10/40	70
457.32632		70
457.32633		70
457.32634	10/40	70
457.32636	10/40	70
457.32638		70
457.3264	10/40	70
457.3265	10/40	70
457.3266	10/40	70
457.32661		70
457.32662		70
457.32664	10/40	70
457.32665		70
457.32666	10/40	70
457.32667		70
457.3267	10/40	70
457.32672	10	70
457.32674	10/40	70
457.32675	10/40	70
457.32676	10	70
457.32677	10/40	70
457.3268	10/40	70

499		
Cat.numb.	Pack qty.	Page
✔ 499.AMRSW-000		155
✔ 499.AMRSW-001		155
✔ 499.AMRSW-010		155
✔ 499.AMRSW-030		155
✔ 499.AMRSW-060		155
✔ 499.AMRSW-100		155
✔ 499.AMRSW-999		155

500		
Cat.numb.	Pack qty.	Page
500.1670	6	100
500.1672	6	100
500.1674	6	100
500.1675	6	100
500.1678	6	100
500.1679	6	100
500.1683	6	100
500.16832	6	100
500.16833	6	100
500.16834	6	100
500.16836	6	100
500.16838	6	100
500.1686	6	100
500.16861	6	100
500.16862	6	100
500.16864	6	100
500.16865	6	100
500.16866	6	100
500.16867	6	100
500.1687	6	100
500.16872	6	100
500.16874	6	100
500.16875	6	100
500.16876	6	100
500.16877	6	100
500.2420	6	107
500.2421	6	107
500.2620	6	107
500.2621	6	107
500.3270	6	100
500.3272	6	100
500.3274	6	100
500.3275	6	100
500.3278	6	100
500.3279	6	100
500.3283	6	100
500.32832	6	100
500.32833	6	100
500.32834	6	100
500.32836	6	100
500.32838	6	100
500.3286	6	100
500.32861	6	100
500.32862	6	100
500.32864	6	100
500.32865	6	100
500.32866	6	100
500.32867	6	100
500.3287	6	100
500.32872	6	100
500.32874	6	100
500.32875	6	100
500.32876	6	100
500.32877	6	100

501		
Cat.numb.	Pack qty.	Page
501.1670	6	104
501.1672	6	104
501.1674	6	104

501		
Cat.numb.	Pack qty.	Page
501.1675	6	104
501.1678	6	104
501.1679	6	104
501.1683	6	104
501.16832	6	104
501.16833	6	104
501.16834	6	104
501.16836	6	104
501.16838	6	104
501.1686	6	104
501.16861	6	104
501.16862	6	104
501.16864	6	104
501.16865	6	104
501.16866	6	104
501.16867	6	104
501.1687	6	104
501.16872	6	104
501.16874	6	104
501.16875	6	104
501.16876	6	104
501.16877	6	104
✔ 501.3270	6	104
✔ 501.3272	6	104
✔ 501.3274	6	104
✔ 501.3275	6	104
✔ 501.3278	6	104
✔ 501.3279	6	104
✔ 501.3283	6	104
✔ 501.3286	6	104
✔ 501.3287	6	104

503		
Cat.numb.	Pack qty.	Page
503.12583	1	138
503.12583-F	1	139
503.12583-FS	1	139
503.12583-M	1	140
503.12583-RM	1	140
503.12583-T	1	141
✔ 503.125834-F	1	139
503.12586	1	138
503.12586-F	1	139
503.12586-FS	1	139
503.12586-M	1	140
503.12586-RM	1	140
503.12586-T	1	141
503.125865	1	138
503.12587	1	138
503.12587-F	1	139
503.12587-FS	1	139
503.12587-M	1	140
503.12587-RM	1	140
503.12587-T	1	141
503.1683	1	0
503.1683-F	1	0
503.1686	1	0
503.1686-F	1	0
503.1687	1	0
503.1687-F	1	0

Index by product number

503		
Cat.numb.	Pack qty.	Page
503.3283	1	0
503.3283-F	1	0
503.3286	1	0
503.3286-F	1	0
503.3287	1	0
503.3287-F	1	0
503.6383	1	0
503.6383-F	1	0
503.6386	1	0
503.6386-F	1	0
503.6387	1	0
503.6387-F	1	0
✔ 503.AMR12583	1	153
✔ 503.AMR12583-F	1	153
✔ 503.AMR12583-M	1	153
✔ 503.AMR12586	1	153
✔ 503.AMR12586-F	1	153
✔ 503.AMR12586-M	1	153
✔ 503.AMR12587	1	153
✔ 503.AMR12587-F	1	153
✔ 503.AMR12587-M	1	153

505		
Cat.numb.	Pack qty.	Page
505.1670	6	101
505.1672	6	101
505.1674	6	101
505.1675	6	101
505.1678	6	101
505.1679	6	101
505.1683	6	101
505.16832	6	101
505.16833	6	101
505.16834	6	101
505.16836	6	101
505.16838	6	101
505.1686	6	101
505.16861	6	101
505.16862	6	101
505.16864	6	101
505.16865	6	101
505.16866	6	101
505.16867	6	101
505.1687	6	101
505.16872	6	101
505.16874	6	101
505.16875	6	101
505.16876	6	101
505.16877	6	101
505.2420	6	107
505.2421	6	107
505.2620	6	107
505.2621	6	107
505.3270	6	101
505.3272	6	101
505.3274	6	101
505.3275	6	101
505.3278	6	101
505.3279	6	101
505.3283	6	101

505		
Cat.numb.	Pack qty.	Page
505.32832	6	101
505.32833	6	101
505.32834	6	101
505.32836	6	101
505.32838	6	101
505.3286	6	101
505.32861	6	101
505.32862	6	101
505.32864	6	101
505.32865	6	101
505.32866	6	101
505.32867	6	101
505.3287	6	101
505.32872	6	101
505.32874	6	101
505.32875	6	101
505.32876	6	101
505.32877	6	101
✔ 505.6370		101
✔ 505.6372		101
✔ 505.6374		101
✔ 505.6375		101
✔ 505.6378		101
✔ 505.6379	1/6	101
✔ 505.6383	1/6	101
✔ 505.63833		101
✔ 505.63834		101
✔ 505.63836		101
✔ 505.6386	1/6	101
✔ 505.63865		101
✔ 505.63866		101
✔ 505.63867		101
✔ 505.6387	1/6	101
✔ 505.63875		101
✔ 505.63876		101
✔ 505.63877		101

506		
Cat.numb.	Pack qty.	Page
506.1670	6	105
506.1672	6	105
506.1674	6	105
506.1675	6	105
506.1678	6	105
506.1679	6	105
506.1683	6	105
506.16832	6	105
506.16833	6	105
506.16834	6	105
506.16836	6	105
506.16838	6	105
506.1686	6	105
506.16861	6	105
506.16862	6	105
506.16864	6	105
506.16865	6	105
506.16866	6	105
506.16867	6	105
506.1687	6	105
506.16872	6	105

506		
Cat.numb.	Pack qty.	Page
506.16874	6	105
506.16875	6	105
506.16876	6	105
506.16877	6	105
✔ 506.3270	6	105
✔ 506.3272	6	105
✔ 506.3274	6	105
✔ 506.3275	6	105
✔ 506.3278	6	105
✔ 506.3279	6	105
✔ 506.3283	6	105
✔ 506.3286	6	105
✔ 506.3287	6	105

512		
Cat.numb.	Pack qty.	Page
512.1650	10/50	78
512.1651	10/50	78
512.1652	10/50	78
512.1653	10/50	78
512.1654	10/50	78
512.1655	10/50	78
512.1656	10/50	78
512.1657	10/50	78
✔ 512.1657-7	10	201
512.1658	10/50	78
512.3250	10/40	78
512.3251	10/40	78
512.3252	10/40	78
512.3253	10/40	78
512.3254	10/40	78
512.3255	10/40	78
512.3256	10/40	78
512.3257	10/40	78
✔ 512.3257-7	10	201
512.3258	10/40	78

513		
Cat.numb.	Pack qty.	Page
513.1650	10/40	72
513.1650T	10/40	73
513.1650TF	10/40	74
513.1650TH	10/40	76
513.1651T	10/40	73
513.1652T	10/40	73
513.1653	10/40	72
✔ 513.1653-1FNS	8	87
✔ 513.1653-2AFS	8	87
✔ 513.1653-2FNS	8	87
✔ 513.1653-AF	10	77
513.1653-BN	10	77
513.1653-CF	10	77
513.1653-DN	10	77
513.1653-FN	10	77
✔ 513.1653-KN	10	77
513.1653-LN	10	77
513.1653-PN	10	77
513.16532T	10/40	73

513		
Cat.numb.	Pack qty.	Page
513.16533T	10/40	73
513.16534T	10/40	73
513.16536T	10/40	73
513.16538T	10/40	73
513.1653T	10/40	73
513.1653TF	10/40	74
513.1653TH	10/40	76
✔ 513.1653TS	10	86
513.1654T	10/40	73
513.1654TF	10/40	74
513.1654TH	10/40	76
513.1655T	10/40	73
513.1656	10/40	72
✔ 513.1656-1FNR	8	88
✔ 513.1656-1FNS	8	87
✔ 513.1656-2AFS	8	87
✔ 513.1656-2FNR	8	88
✔ 513.1656-2FNS	8	87
✔ 513.1656-AF	10	77
513.1656-BN	10	77
513.1656-CF	10	77
513.1656-DN	10	77
513.1656-FN	10	77
✔ 513.1656-KN	10	77
513.1656-LN	10	77
513.1656-PN	10	77
513.16561T	10/40	73
513.16562T	10/40	73
513.16564T	10/40	73
513.16565T	10/40	73
513.16566T	10/40	73
513.16567T	10/40	73
513.1656T	10/40	73
513.1656TF	10/40	74
513.1656TH	10/40	76
✔ 513.1656TS	10	86
513.1657	10/40	72
✔ 513.1657-1FNR	8	88
✔ 513.1657-1FNS	8	87
✔ 513.1657-2AFS	8	87
✔ 513.1657-2FNR	8	88
✔ 513.1657-2FNS	8	87
✔ 513.1657-AF	10	77
513.1657-BN	10	77
513.1657-CF	10	77
513.1657-DN	10	77
513.1657-FN	10	77
✔ 513.1657-KN	10	77
513.1657-LN	10	77
513.1657-PN	10	77
513.16572T	10/40	73
513.16574T	10/40	73
513.16575T	10/40	73
513.16576T	10/40	73
513.16577T	10/40	73
513.1657T	10/40	73
513.1657TF	10/40	74
513.1657TH	10/40	76
✔ 513.1657TS	10	86
513.1658T	10/40	73
513.1658TF	10/40	74
513.1658TH	10/40	76

● = IMQ or other quality marks ✔ = new product ✦ = make to order

513		
Cat.numb.	Pack qty.	Page
513.3250	10	72
513.3250T	10	73
513.3250TF	10	74
513.3251T	10	73
513.3252T	10	73
513.3253	10	72
513.3253-1FFS	8	87
513.3253-2AFS	8	87
513.3253-2FFS	8	87
513.3253-AF	10	77
513.3253-BF	10	77
513.3253-CF	10	77
513.3253-DF	10	77
513.3253-FF	10	77
513.3253-KF	10	77
513.3253-LF	10	77
513.3253-PF	10	77
513.32532T	10	73
513.32533T	10	73
513.32534T	10	73
513.32536T	10	73
513.32538T	10	73
513.3253T	10	73
513.3253TF	10	74
513.3253TS	10	86
513.3253TS.A	10	86
513.3254T	10	73
513.3254TF	10	74
513.3255T	10	73
513.3256	10	72
513.3256-1FFR	8	88
513.3256-1FFS	8	87
513.3256-2AFS	8	87
513.3256-2FFR	8	88
513.3256-2FFS	8	87
513.3256-AF	10	77
513.3256-BF	10	77
513.3256-CF	10	77
513.3256-DF	10	77
513.3256-FF	10	77
513.3256-KF	10	77
513.3256-LF	10	77
513.3256-PF	10	77
513.32561T	10	73
513.32562T	10	73
513.32564T	10	73
513.32565T	10	73
513.32566T	10	73
513.32567T	10	73
513.3256T	10	73
513.3256TF	10	74
513.3256TS	10	86
513.3256TS.A	10	86
513.3257	10	72
513.3257-1FFR	8	88
513.3257-1FFS	8	87
513.3257-2AFS	8	87
513.3257-2FFR	8	88
513.3257-2FFS	8	87
513.3257-AF	10	77
513.3257-BF	10	77
513.3257-CF	10	77

513		
Cat.numb.	Pack qty.	Page
513.3257-DF	10	77
513.3257-FF	10	77
513.3257-KF	10	77
513.3257-LF	10	77
513.3257-PF	10	77
513.32572T	10	73
513.32574T	10	73
513.32575T	10	73
513.32576T	10	73
513.32577T	10	73
513.3257T	10	73
513.3257TF	10	74
513.3257TS	10	86
513.3257TS.A	10	86
513.3258T	10	73
513.3258TF	10	74
513.6350T	4	75
513.6351T	4	75
513.6352T	4	75
513.63532T		75
513.63533T		75
513.63534T		75
513.63536T		75
513.63538T		75
513.6353T	4	75
513.6354T	4	75
513.6355T	4	75
513.63561T		75
513.63562T		75
513.63564T		75
513.63565T		75
513.63566T		75
513.63567T		75
513.6356T	4	75
513.63572T		75
513.63574T		75
513.63575T		75
513.63576T		75
513.63577T		75
513.6357T	4	75
513.6358T	4	75

517		
Cat.numb.	Pack qty.	Page
517.1650	10/50	84
517.1651	10/50	84
517.1652	10/40	84
517.1653	10/50	84
517.1654	10/50	84
517.1655	10/40	84
517.1656	10/50	84
517.1657	10/40	84
517.1657-7	5	201
517.1658	10/50	84
517.3250	10/40	84
517.3251	10/40	84
517.3252	10/40	84
517.3253	10/40	84
517.3254	10/40	84
517.3255	10/40	84

517		
Cat.numb.	Pack qty.	Page
517.3256	10/40	84
517.32564	10/40	84
517.3257	10/40	84
517.3257-7	5	201
517.3258	10/40	84

518		
Cat.numb.	Pack qty.	Page
518.12550T	1/4	82
518.12551T	1/4	82
518.12552T	1/4	82
518.125532T		82
518.125533T		82
518.125534T		82
518.125536T		82
518.125538T		82
518.12553T	1/4	82
518.12554T	1/4	82
518.12555T	1/4	82
518.125561T		82
518.125562T		82
518.125564T		82
518.125565T		82
518.125566T		82
518.125567T		82
518.12556T	1/4	82
518.125572T		82
518.125574T		82
518.125575T		82
518.125576T		82
518.125577T		82
518.12557T	1/4	82
518.12558T	1/4	82
518.1650T	10/40	80
518.1650TF	10/40	81
518.1650TH	10/40	83
518.1651T	10/40	80
518.1652T	10/40	80
518.16532T	10/40	80
518.16533T	10/40	80
518.16534T	10/40	80
518.16536T	10/40	80
518.16538T	10/40	80
518.1653T	10/40	80
518.1653TF	10/40	81
518.1653TH	10/40	83
518.1653TS	10	89
518.1654T	10/40	80
518.1654TF	10/40	81
518.1654TH	10/40	83
518.1655T	10/40	80
518.16561T	10/40	80
518.16562T	10/40	80
518.16564T	10/40	80
518.16565T	10/40	80
518.16566T	10/40	80
518.16567T	10/40	80
518.1656T	10/40	80
518.1656TF	10/40	81
518.1656TH	10/40	83

518		
Cat.numb.	Pack qty.	Page
518.1656TS	10	89
518.16572T	10/40	80
518.16574T	10/40	80
518.16575T	10/40	80
518.16576T	10/40	80
518.16577T	10/40	80
518.1657T	10/40	80
518.1657TF	10/40	81
518.1657TH	10/40	83
518.1657TS	10	89
518.1658T	10/40	80
518.1658TF	10/40	81
518.1658TH	10/40	83
518.3250T	10	80
518.3250TF	10	81
518.3251T	10	80
518.3252T	10	80
518.32532T	10	80
518.32533T	10	80
518.32534T	10	80
518.32536T	10	80
518.32538T	10	80
518.3253T	10	80
518.3253TF	10	81
518.3253TS	10	89
518.3253TS.A	10	89
518.3254T	10	80
518.3254TF	10	81
518.3255T	10	80
518.32561T	10	80
518.32562T	10	80
518.32564T	10	80
518.32564TF	10	81
518.32565T	10	80
518.32566T	10	80
518.32567T	10	80
518.3256T	10	80
518.3256TF	10	81
518.3256TS	10	89
518.3256TS.A	10	89
518.32572T	10	80
518.32574T	10	80
518.32575T	10	80
518.32576T	10	80
518.32577T	10	80
518.3257T	10	80
518.3257TF	10	81
518.3257TS	10	89
518.3257TS.A	10	89
518.3258T	10	80
518.3258TF	10	81
518.6350T	4	82
518.6351T	4	82
518.6352T	4	82
518.63532T		82
518.63533T		82
518.63534T		82
518.63536T		82
518.63538T		82
518.6353T	4	82
518.6354T	4	82
518.6355T	4	82

● = IMQ or other quality marks ✔ = new product ✦ = make to order

Index by product number

518		
Cat.numb.	Pack qty.	Page
518.63561T		82
518.63562T		82
518.63564T		82
518.63565T		82
518.63566T		82
518.63567T		82
518.6356T	4	82
518.63572T		82
518.63574T		82
518.63575T		82
518.63576T		82
518.63577T		82
518.6357T	4	82
518.6358T	4	82

522		
Cat.numb.	Pack qty.	Page
522.1650	10/50	79
522.1651	10/50	79
522.1652	10/50	79
522.1653	10/50	79
522.1654	10/50	79
522.1655	10/50	79
522.1656	10/50	79
522.1657	10/50	79
522.1658	10/50	79
522.3250	10/40	79
522.3251	10/40	79
522.3252	10/40	79
522.3253	10/40	79
522.3254	10/40	79
522.3255	10/40	79
522.3256	10/40	79
522.3257	10/40	79
522.3258	10/40	79

527		
Cat.numb.	Pack qty.	Page
527.1650	10/50	85
527.1651	10/50	85
527.1652	10/50	85
527.1653	10/50	85
527.1654	10/50	85
527.1655	10/50	85
527.1656	10/50	85
527.1657	10/50	85
527.1658	10/50	85
527.3250	10/40	85
527.3251	10/40	85
527.3252	10/40	85
527.3253	10/40	85
527.3254	10/40	85
527.3255	10/40	85
527.3256	10/40	85
527.3257	10/40	85
527.3258	10/40	85

530		
Cat.numb.	Pack qty.	Page
530.01610	10/50	160
530.01611	10/50	160
530.016110	10/50	160
530.016112	10/50	160
530.016114	10/50	160
530.016115	10/50	160
530.01612	10/50	160
530.01613	10/50	160
530.016130	10/50	160
530.016132	10/50	160
530.016134	10/50	160
530.016135	10/50	160
530.01614	10/50	160
530.03210	10/50	161
530.03211	10/50	161
530.032110	10/50	161
530.032112	10/50	161
530.032114	10/50	161
530.032115	10/50	161
530.03212	10/50	161
530.03213	10/50	161
530.032130	10/50	161
530.032132	10/50	161
530.032134	10/50	161
530.032135	10/50	161
530.03214	10/50	161
530.1610	10/50	160
530.1611	10/50	160
530.16110	10/50	160
530.16112	10/50	160
530.16114	10/50	160
530.16115	10/50	160
530.1612	10/50	160
530.1613	10/50	160
530.16130	10/50	160
530.16132	10/50	160
530.16134	10/50	160
530.16135	10/50	160
530.1614	10/50	160
530.3210	10/50	160
530.3211	10/50	160
530.32110	10/50	160
530.32112	10/50	160
530.32114	10/50	160
530.32115	10/50	160
530.3212	10/50	160
530.3213	10/50	160
530.32130	10/50	160
530.32132	10/50	160
530.32134	10/50	160
530.32135	10/50	160
530.3214	10/50	160

535		
Cat.numb.	Pack qty.	Page
535.01610	10/50	161
535.01611	10/50	161
535.016110	10/50	161
535.016112	10/50	161
535.016114	10/50	161

535		
Cat.numb.	Pack qty.	Page
535.016115	10/50	161
535.01612	10/50	161
535.01613	10/50	161
535.016130	10/50	161
535.016132	10/50	161
535.016134	10/50	161
535.016135	10/50	161
535.01614	10/50	161
535.03210	10/50	161
535.03211	10/50	161
535.032110	10/50	161
535.032112	10/50	161
535.032114	10/50	161
535.032115	10/50	161
535.03212	10/50	161
535.03213	10/50	161
535.032130	10/50	161
535.032132	10/50	161
535.032134	10/50	161
535.032135	10/50	161
535.03214	10/50	161
535.1610	10/50	161
535.1611	10/50	161
535.16110	10/50	161
535.16112	10/50	161
535.16114	10/50	161
535.16115	10/50	161
535.1612	10/50	161
535.1613	10/50	161
535.16130	10/50	161
535.16132	10/50	161
535.16134	10/50	161
535.16135	10/50	161
535.1614	10/50	161
535.3210	10/50	161
535.3211	10/50	161
535.32110	10/50	161
535.32112	10/50	161
535.32114	10/50	161
535.32115	10/50	161
535.3212	10/50	161
535.3213	10/50	161
535.32130	10/50	161
535.32132	10/50	161
535.32134	10/50	161
535.32135	10/50	161
535.3214	10/50	161

560		
Cat.numb.	Pack qty.	Page
560.1670	1/12	118
560.1672	1/12	118
560.1674	1/12	118
560.1675	1/12	118
560.1678	1/12	118
560.1679	1/12	118
560.1683	1/12	118
560.16832	1/12	118
560.16833	1/12	118
560.16834	1/12	118

560		
Cat.numb.	Pack qty.	Page
560.16836	1/12	118
560.16838	1/12	118
560.1686	1/12	118
560.16861	1/12	118
560.16862	1/12	118
560.16864	1/12	118
560.16865	1/12	118
560.16866	1/12	118
560.16867	1/12	118
560.1687	1/12	118
560.16872	1/12	118
560.16874	1/12	118
560.16875	1/12	118
560.16876	1/12	118
560.16877	1/12	118
560.3270	1/12	118
560.3272	1/12	118
560.3274	1/12	118
560.3275	1/12	118
560.3278	1/12	118
560.3279	1/12	118
560.3283	1/12	118
560.32832	1/12	118
560.32833	1/12	118
560.32834	1/12	118
560.32836	1/12	118
560.32838	1/12	118
560.3286	1/12	118
560.32861	1/12	118
560.32862	1/12	118
560.32864	1/12	118
560.32865	1/12	118
560.32866	1/12	118
560.32867	1/12	118
560.3287	1/12	118
560.32872	1/12	118
560.32874	1/12	118
560.32875	1/12	118
560.32876	1/12	118
560.32877	1/12	118

561		
Cat.numb.	Pack qty.	Page
561.1670	1/12	119
561.1672	1/12	119
561.1674	1/12	119
561.1675	1/12	119
561.1678	1/12	119
561.1679	1/12	119
561.1683	1/12	119
561.16832	1/12	119
561.16833	1/12	119
561.16834	1/12	119
561.16836	1/12	119
561.16838	1/12	119
561.1686	1/12	119
561.16861	1/12	119
561.16862	1/12	119
561.16864	1/12	119
561.16865	1/12	119

● = IMQ or other quality marks ✔ = new product ✦ = make to order

561

Cat.numb.	Pack qty.	Page
561.16866	1/12	119
561.16867	1/12	119
561.1687	1/12	119
561.16872	1/12	119
561.16874	1/12	119
561.16875	1/12	119
561.16876	1/12	119
561.16877	1/12	119
561.3270	1/12	119
561.3272	1/12	119
561.3274	1/12	119
561.3275	1/12	119
561.3278	1/12	119
561.3279	1/12	119
561.3283	1/12	119
561.32832	1/12	119
561.32833	1/12	119
561.32834	1/12	119
561.32836	1/12	119
561.32838	1/12	119
561.3286	1/12	119
561.32861	1/12	119
561.32862	1/12	119
561.32864	1/12	119
561.32865	1/12	119
561.32866	1/12	119
561.32867	1/12	119
561.3287	1/12	119
561.32872	1/12	119
561.32874	1/12	119
561.32875	1/12	119
561.32876	1/12	119
561.32877	1/12	119
561.6370	1/4	119
561.6372	1/4	119
561.6374	1/4	119
561.6375	1/4	119
561.6378	1/4	119
561.6379	1/4	119
561.6383	1/4	119
561.63833	1/4	119
561.63834	1/4	119
561.63836	1/4	119
561.63838	1/4	119
561.6386	1/4	119
561.63865	1/4	119
561.63866	1/4	119
561.63867	1/4	119
561.6387	1/4	119
561.63875	1/4	119
561.63876	1/4	119
561.63877	1/4	119

562

Cat.numb.	Pack qty.	Page
562.1670	1/12	120
562.1672	1/12	120
562.1674	1/12	120
562.1675	1/12	120
562.1678	1/12	120

562

Cat.numb.	Pack qty.	Page
562.1679	1/12	120
562.1683	1/12	120
562.16832	1/12	120
562.16833	1/12	120
562.16834	1/12	120
562.16836	1/12	120
562.16838	1/12	120
562.1686	1/12	120
562.16861	1/12	120
562.16862	1/12	120
562.16864	1/12	120
562.16865	1/12	120
562.16866	1/12	120
562.16867	1/12	120
562.1687	1/12	120
562.16872	1/12	120
562.16874	1/12	120
562.16875	1/12	120
562.16876	1/12	120
562.16877	1/12	120
562.3270	1/12	120
562.3272	1/12	120
562.3274	1/12	120
562.3275	1/12	120
562.3278	1/12	120
562.3279	1/12	120
562.3283	1/12	120
562.32832	1/12	120
562.32833	1/12	120
562.32834	1/12	120
562.32836	1/12	120
562.32838	1/12	120
562.3286	1/12	120
562.32861	1/12	120
562.32862	1/12	120
562.32864	1/12	120
562.32865	1/12	120
562.32866	1/12	120
562.32867	1/12	120
562.3287	1/12	120
562.32872	1/12	120
562.32874	1/12	120
562.32875	1/12	120
562.32876	1/12	120
562.32877	1/12	120

563

Cat.numb.	Pack qty.	Page
563.1670	1/12	121
563.1672	1/12	121
563.1674	1/12	121
563.1675	1/12	121
563.1678	1/12	121
563.1679	1/12	121
563.1683	1/12	121
563.16832	1/12	121
563.16833	1/12	121
563.16834	1/12	121
563.16836	1/12	121
563.16838	1/12	121

563

Cat.numb.	Pack qty.	Page
563.1686	1/12	121
563.16861	1/12	121
563.16862	1/12	121
563.16864	1/12	121
563.16865	1/12	121
563.16866	1/12	121
563.16867	1/12	121
563.1687	1/12	121
563.16872	1/12	121
563.16874	1/12	121
563.16875	1/12	121
563.16876	1/12	121
563.16877	1/12	121
563.3270	1/12	121
563.3272	1/12	121
563.3274	1/12	121
563.3275	1/12	121
563.3278	1/12	121
563.3279	1/12	121
563.3283	1/12	121
563.32832	1/12	121
563.32833	1/12	121
563.32834	1/12	121
563.32836	1/12	121
563.32838	1/12	121
563.3286	1/12	121
563.32861	1/12	121
563.32862	1/12	121
563.32864	1/12	121
563.32865	1/12	121
563.32866	1/12	121
563.32867	1/12	121
563.3287	1/12	121
563.32872	1/12	121
563.32874	1/12	121
563.32875	1/12	121
563.32876	1/12	121
563.32877	1/12	121
563.6370	1/4	121
563.6372	1/4	121
563.6374	1/4	121
563.6375	1/4	121
563.6378	1/4	121
563.6379	1/4	121
563.6383	1/4	121
563.63833	1/4	121
563.63834	1/4	121
563.63838	1/4	121
563.6386	1/4	121
563.6387	1/4	121

564

Cat.numb.	Pack qty.	Page
564.1670	1/12	124
564.1672	1/12	124
564.1674	1/12	124
564.1675	1/12	124
564.1678	1/12	124
564.1679	1/12	124
564.1683	1/12	124

564

Cat.numb.	Pack qty.	Page
564.16832	1/12	124
564.16833	1/12	124
564.16834	1/12	124
564.16836	1/12	124
564.16838	1/12	124
564.1686	1/12	124
564.16861	1/12	124
564.16862	1/12	124
564.16864	1/12	124
564.16865	1/12	124
564.16866	1/12	124
564.16867	1/12	124
564.1687	1/12	124
564.16872	1/12	124
564.16874	1/12	124
564.16875	1/12	124
564.16876	1/12	124
564.16877	1/12	124
564.3270	1/12	124
564.3272	1/12	124
564.3274	1/12	124
564.3275	1/12	124
564.3278	1/12	124
564.3279	1/12	124
564.3283	1/12	124
564.32832	1/12	124
564.32833	1/12	124
564.32834	1/12	124
564.32836	1/12	124
564.32838	1/12	124
564.3286	1/12	124
564.32861	1/12	124
564.32862	1/12	124
564.32864	1/12	124
564.32865	1/12	124
564.32866	1/12	124
564.32867	1/12	124
564.3287	1/12	124
564.32872	1/12	124
564.32874	1/12	124
564.32875	1/12	124
564.32876	1/12	124
564.32877	1/12	124
564.6370	1/4	124
564.6372	1/4	124
564.6374	1/4	124
564.6375	1/4	124
564.6378	1/4	124
564.6379	1/4	124
564.6383	1/4	124
564.63832	1/4	124
564.63833	1/4	124
564.63834	1/4	124
564.63838	1/4	124
564.6386	1/4	124
564.6387	1/4	124

565

Cat.numb.	Pack qty.	Page
565.2416	1/10	126

● = IMQ or other quality marks ✔ = new product ✦ = make to order

Index by product number

565

Cat.numb.	Pack qty.	Page
565.2416/S	1/10	126
565.2420	1/10	127
565.2420/S	1/10	127
565.2421	1/10	127
565.2421/S	1/10	127
565.2432	1/10	127
565.2432/S	1/10	127
565.2433	1/10	127
565.2433/S	1/10	127
565.2516	1/4	126
565.2516/S	1/4	126

566

Cat.numb.	Pack qty.	Page
566.2416	1/10	126
566.2416/S	1/10	126
566.2420	1/10	127
566.2420/S	1/10	127
566.2421	1/10	127
566.2421/S	1/10	127
566.2432	1/10	127
566.2432/S	1/10	127
566.2433	1/10	127
566.2433/S	1/10	127
566.2516	1/4	126
566.2516/S	1/4	126

567

Cat.numb.	Pack qty.	Page
567.1670	1/4	122
567.1672	1/4	122
567.1674	1/4	122
567.1675	1/4	122
567.1678	1/4	122
567.1679	1/4	122
567.1683	1/4	122
567.16832	1/4	122
567.16833	1/4	122
567.16834	1/4	122
567.16836	1/4	122
567.16838	1/4	122
567.1686	1/4	122
567.16861	1/4	122
567.16862	1/4	122
567.16864	1/4	122
567.16865	1/4	122
567.16866	1/4	122
567.16867	1/4	122
567.1687	1/4	122
567.16872	1/4	122
567.16874	1/4	122
567.16875	1/4	122
567.16876	1/4	122
567.16877	1/4	122
567.3270	1/4	122
567.3272	1/4	122
567.3274	1/4	122
567.3275	1/4	122

567

Cat.numb.	Pack qty.	Page
567.3278	1/4	122
567.3279	1/4	122
567.3283	1/4	122
567.32832	1/4	122
567.32833	1/4	122
567.32834	1/4	122
567.32836	1/4	122
567.32838	1/4	122
567.3286	1/4	122
567.32861	1/4	122
567.32862	1/4	122
567.32864	1/4	122
567.32865	1/4	122
567.32866	1/4	122
567.32867	1/4	122
567.3287	1/4	122
567.32872	1/4	122
567.32874	1/4	122
567.32875	1/4	122
567.32876	1/4	122
567.32877	1/4	122

568

Cat.numb.	Pack qty.	Page
568.1670	1/4	123
568.1672	1/4	123
568.1674	1/4	123
568.1675	1/4	123
568.1678	1/4	123
568.1679	1/4	123
568.1683	1/4	123
568.16832	1/4	123
568.16833	1/4	123
568.16834	1/4	123
568.16836	1/4	123
568.16838	1/4	123
568.1686	1/4	123
568.16861	1/4	123
568.16862	1/4	123
568.16864	1/4	123
568.16865	1/4	123
568.16866	1/4	123
568.16867	1/4	123
568.1687	1/4	123
568.16872	1/4	123
568.16874	1/4	123
568.16875	1/4	123
568.16876	1/4	123
568.16877	1/4	123
568.3270	1/4	123
568.3272	1/4	123
568.3274	1/4	123
568.3275	1/4	123
568.3278	1/4	123
568.3279	1/4	123
568.3283	1/4	123
568.32832	1/4	123
568.32833	1/4	123
568.32834	1/4	123
568.32836	1/4	123

568

Cat.numb.	Pack qty.	Page
568.32838	1/4	123
568.3286	1/4	123
568.32861	1/4	123
568.32862	1/4	123
568.32864	1/4	123
568.32865	1/4	123
568.32866	1/4	123
568.32867	1/4	123
568.3287	1/4	123
568.32872	1/4	123
568.32874	1/4	123
568.32875	1/4	123
568.32876	1/4	123
568.32877	1/4	123
568.6370	1/4	123
568.6372	1/4	123
568.6374	1/4	123
568.6375	1/4	123
568.6378	1/4	123
568.6379	1/4	123
568.6383	1/4	123
568.63833	1/4	123
568.63834	1/4	123
568.63838	1/4	123
568.6386	1/4	123
568.6387	1/4	123

569

Cat.numb.	Pack qty.	Page
569.1670	1/4	125
569.1672	1/4	125
569.1674	1/4	125
569.1675	1/4	125
569.1678	1/4	125
569.1679	1/4	125
569.1683	1/4	125
569.16832	1/4	125
569.16833	1/4	125
569.16834	1/4	125
569.16836	1/4	125
569.16838	1/4	125
569.1686	1/4	125
569.16861	1/4	125
569.16862	1/4	125
569.16864	1/4	125
569.16865	1/4	125
569.16866	1/4	125
569.16867	1/4	125
569.1687	1/4	125
569.16872	1/4	125
569.16874	1/4	125
569.16875	1/4	125
569.16876	1/4	125
569.16877	1/4	125
569.3270	1/4	125
569.3272	1/4	125
569.3274	1/4	125
569.3275	1/4	125
569.3278	1/4	125
569.3279	1/4	125

569

Cat.numb.	Pack qty.	Page
569.3283	1/4	125
569.32832	1/4	125
569.32833	1/4	125
569.32834	1/4	125
569.32836	1/4	125
569.32838	1/4	125
569.3286	1/4	125
569.32861	1/4	125
569.32862	1/4	125
569.32864	1/4	125
569.32865	1/4	125
569.32866	1/4	125
569.32867	1/4	125
569.3287	1/4	125
569.32872	1/4	125
569.32874	1/4	125
569.32875	1/4	125
569.32876	1/4	125
569.32877	1/4	125
569.6370	1/4	125
569.6372	1/4	125
569.6374	1/4	125
569.6375	1/4	125
569.6378	1/4	125
569.6379	1/4	125
569.6383	1/4	125
569.63832	1/4	125
569.63833	1/4	125
569.63834	1/4	125
569.63838	1/4	125
569.6386	1/4	125
569.6387	1/4	125

570

Cat.numb.	Pack qty.	Page
570.0016	10/100	94
570.0032	10	94
570.0116	10	94
✔ 570.0116.20	10	94
✔ 570.0116.25	10	94
570.0132	10	94
✔ 570.0132.32	10	94
✔ 570.2001	10/100	92
570.2041	10/100	90
570.2061	10/100	90
570.2062	10/100	90
570.2071	10/100	90
570.2081	10/100	90
570.2091	10/100	90
✔ 570.2092	10/100	90
570.2093	10/100	90
570.2561	10/100	90
570.2591	10/100	90
570.4041	10/100	90
570.4051	10/100	90
570.4061	10/100	90
570.4062	10/100	90
✔ 570.4062-SW	10/100	0
570.4071	10/100	90
570.4081	10/100	90

● = IMQ or other quality marks ✔ = new product ✦ = make to order

570

Cat.numb.	Pack qty.	Page
570.4091	10/100	90
✔ 570.4092	10/100	90
570.4093	10/100	90
✦ 570.4141	9/90	90
✦ 570.4151	9/90	90
570.4161	9/90	90
570.4162	9/90	90
✦ 570.4171	9/90	90
✦ 570.4181	9/90	90
✦ 570.4191	9/90	90
✔ 570.4192	9/90	90
✦ 570.4193	9/90	90
570.5012	10/100	92
570.5052	10/100	92
✦ 570.6001	1/12	93
570.6011	5	93
✦ 570.6403	1/12	93
✦ 570.6404	1/12	93
✦ 570.6405	1/12	93
✦ 570.6407	1/12	93
✦ 570.6411	1/12	93
✦ 570.6413	1/12	93
✦ 570.6414	1/12	93
✦ 570.6417	1/12	93
570.6421	1/12	93
✦ 570.6424	1/12	93
✦ 570.6427	1/12	93
✦ 570.6428	1/12	93
✦ 570.6481.50	1/12	93
570.7180	1/12	91
✦ 570.80163	10/100	182
✦ 570.80164	10/100	182
✦ 570.80165	10/100	182
✦ 570.80324	10/100	182
✦ 570.80325	10/100	182
✦ 570.8063	10	182
✦ 570.8125	10	182
✦ 570.90163	10/100	43
✦ 570.90164	10/100	43
✦ 570.90165	10/100	43
✦ 570.90324	10/100	43
✦ 570.90325	10/100	43
✦ 570.9063	10	43
✦ 570.9125	10	43
✦ 570.M0125	6	94
570.M0163	6	94

572

Cat.numb.	Pack qty.	Page
572.0120	6	113
572.0200	6	110
572.0205	6	110
572.0210	6/60	110
572.0220	6/60	110
✔ 572.0308	1/6	111
✔ 572.0309	6	111
572.0310	6	111
572.0311	1	112
572.0312	1	113
572.0313	1	112

572

Cat.numb.	Pack qty.	Page
572.0314	1	113
572.0315	1	112
572.0316	1	113
✦ 572.0320	1/6	111
✦ 572.0322	1/10	111
✦ 572.0330	4	114
✦ 572.3390	6	111

576

Cat.numb.	Pack qty.	Page
576.4300	12	128
576.4301	12	128
576.4302	6	129
576.4303	12	129
576.4304	6	129
576.4305	6	129
576.4321	12	128
576.4322	6	129
576.4323	12	129
576.4324	6	129
576.4325	6	129
576.4340	6	128
✦ 576.4390	6	129

578

Cat.numb.	Pack qty.	Page
578.4300	12	130
578.4301	12	130
578.4302	6	131
578.4304	6	131
578.4305	6	131
578.4321	12	130
578.4322	6	131
578.4324	6	131
578.4325	6	131
578.4340	6	130

579

Cat.numb.	Pack qty.	Page
✦ 579.0021		145
✦ 579.0022		145
✦ 579.0030		145
✦ 579.0031		145
✦ 579.0040		145
✦ 579.0100	12	146
579.0125	1	146
579.0200	1/12	146
579.0201	1/12	146
579.0332	12	146
✦ 579.0400	12	147
✔ 579.0450	10	147
579.5001	10	147
579.5100	1	143
579.5110	1	143
579.5111	1	144
579.5120	1	143

579

Cat.numb.	Pack qty.	Page
579.5121	1	144
579.5200	1	143
579.5210	1	143
579.5211	1	144

590

Cat.numb.	Pack qty.	Page
✦ 590.BK040	12	262
✦ 590.BK040H	12	262
✦ 590.BK080	5	262
✦ 590.BK080H	5	262
✦ 590.DC0416	6	224
✦ 590.DC0815	6	224
✦ 590.DC0820	6	224
✦ 590.DC0825	6	224
✦ 590.DC0830	6	224
✦ 590.DC0840	6	224
590.DCGE0416	1/12	253
590.DCGE0815	1/10	253
590.DCGE0820	1/10	253
590.DCGE0825	1/5	253
590.DCGE0830	1/5	253
590.DCGE0840	1	253
✦ 590.EL10003	1/5	241
✦ 590.EL10005	1/5	241
✦ 590.EL1606	1/5	239
✦ 590.EL1608	1/5	239
✦ 590.EL2012	1/12	239
✦ 590.EL2013	1/12	239
✦ 590.EL2015	1/12	239
✦ 590.EL2506	1/5	239
✦ 590.EL2508	1/5	239
✦ 590.EL3206	1/5	239
✦ 590.EL3208	1/5	239
✦ 590.EL3212	1/12	239
✦ 590.EL3213	1/12	239
✦ 590.EL3215	1/12	239
✦ 590.EL4006	1/5	239
✦ 590.EL4008	1/5	239
✦ 590.EL4012	1/12	239
✦ 590.EL4013	1/12	239
✦ 590.EL4015	1/12	239
✦ 590.EL6302	1/5	241
✦ 590.EL6303	1/5	241
✦ 590.EL6305	1/5	241
✦ 590.EL8002	1/5	241
✦ 590.EL8003	1/5	241
✦ 590.EL8005	1/5	241
590.EM10003	1/5	242
✦ 590.EM10005	1/5	242
✦ 590.EM10006	1	242
✦ 590.EM10008	1	242
✦ 590.EM12503	1	242
✦ 590.EM12505	1	242
✦ 590.EM12506	1	242
✦ 590.EM12508	1	242
✦ 590.EM16003	1	242
✦ 590.EM16005	1	242
✦ 590.EM16006	1	242
✦ 590.EM16008	1	242

590

Cat.numb.	Pack qty.	Page
590.EM1606	1/5	240
590.EM1608	1/5	240
590.EM2002	1/12	238
590.EM2003	1/12	238
590.EM2004	1/12	238
590.EM2005	1/12	238
590.EM2012	1/12	240
590.EM2013	1/12	240
590.EM2014	1/12	240
590.EM2015	1/12	240
590.EM2506	1/5	240
590.EM2508	1/5	240
590.EM3202	1/12	238
590.EM3203	1/12	238
590.EM3204	1/12	238
590.EM3205	1/12	238
590.EM3206	1/5	240
590.EM3208	1/5	240
590.EM3212	1/12	240
590.EM3213	1/12	240
590.EM3214	1/12	240
590.EM3215	1/12	240
✦ 590.EM4002	1/12	238
✦ 590.EM4003	1/12	238
✦ 590.EM4004	1/12	238
590.EM4005	1/12	238
590.EM4006	1/5	240
590.EM4008	1/5	240
✦ 590.EM4012	1/12	240
✦ 590.EM4013	1/12	240
590.EM4014	1/12	240
590.EM4015	1/12	240
✦ 590.EM6302	1/5	242
590.EM6303	1/5	242
590.EM6304	1/5	242
✦ 590.EM6305	1/5	242
✦ 590.EM6306	1	242
✦ 590.EM6308	1	242
✦ 590.EM8002	1/5	242
✦ 590.EM8003	1/5	242
✦ 590.EM8004	1/5	242
✦ 590.EM8005	1/5	242
✦ 590.EM8006	1	242
✦ 590.EM8008	1	242
✔ 590.EMB10003		254
✔ 590.EMB10005		254
✔ 590.EMB12503		254
✔ 590.EMB12505		254
✔ 590.EMB16003		254
✔ 590.EMB16005		254
✔ 590.EMB6303		254
✔ 590.EMB6305		254
✔ 590.EMB8003		254
✔ 590.EMB8005		254
✔ 590.EMD10003		254
✔ 590.EMD10005		254
✔ 590.EMD12503		254
✔ 590.EMD12505		254
✔ 590.EMD16003		254
✔ 590.EMD16005		254
✔ 590.EMD6303		254
✔ 590.EMD6305		254

● = IMQ or other quality marks ✔ = new product ✦ = make to order

Index by product number

590		
Cat.numb.	Pack qty.	Page
590.EMD8003		254
590.EMD8005		254
590.EMF1602		254
590.EMF1603		254
590.EMF1604		254
590.EMF1605		254
590.EMF3202		254
590.EMF3203		254
590.EMF3204		254
590.EMF3205		254
590.ER2002	1/12	237
590.ER2003	1/12	237
590.ER2004	1/12	237
590.ER2005	1/12	237
590.ER3202	1/12	237
590.ER3203	1/12	237
590.ER3204	1/12	237
590.ER3205	1/12	237
590.ER4002	1/12	237
590.ER4003	1/12	237
590.ER4004	1/12	237
590.ER4005	1/12	237
590.GE10003	1/5	241
590.GE10003-C	1	259
590.GE10005	1/5	241
590.GE10005-C	1	259
590.GE10006	1	241
590.GE10008	1	241
590.GE12503	1	241
590.GE12503-C	1	259
590.GE12505	1	241
590.GE12505-C	1	259
590.GE12506	1	241
590.GE12508	1	241
590.GE16003	1	241
590.GE16003-C	1	259
590.GE16005	1	241
590.GE16005-C	1	259
590.GE16006	1	241
590.GE16008	1	241
590.GE1603-C	1/5	259
590.GE1605-C	1/5	259
590.GE1606	1/5	239
590.GE1608	1/5	239
590.GE2002	1/12	238
590.GE2003	1/12	238
590.GE2004	1/12	238
590.GE2005	1/12	238
590.GE2012	1/12	239
590.GE2013	1/12	239
590.GE2014	1/12	239
590.GE2015	1/12	239
590.GE2021	1/12	243
590.GE2503-C	1/5	259
590.GE2505-C	1/5	259
590.GE2506	1/5	239
590.GE2508	1/5	239
590.GE3202	1/12	238
590.GE3203	1/12	238
590.GE3203-C	1/5	259
590.GE3204	1/12	238
590.GE3205	1/12	238

590		
Cat.numb.	Pack qty.	Page
590.GE3205-C	1/5	259
590.GE3206	1/5	239
590.GE3208	1/5	239
590.GE3212	1/12	239
590.GE3213	1/12	239
590.GE3214	1/12	239
590.GE3215	1/12	239
590.GE3221	1/12	243
590.GE4002	1/12	238
590.GE4003	1/12	238
590.GE4003-C	1/5	259
590.GE4004	1/12	238
590.GE4005	1/12	238
590.GE4005-C	1/5	259
590.GE4006	1/5	239
590.GE4008	1/5	239
590.GE4012	1/12	239
590.GE4013	1/12	239
590.GE4014	1/12	239
590.GE4015	1/12	239
590.GE4021	1/12	243
590.GE6302	1/5	241
590.GE6303	1/5	241
590.GE6303-C	1	259
590.GE6304	1/5	241
590.GE6305	1/5	241
590.GE6305-C	1	259
590.GE6306	1	241
590.GE6308	1	241
590.GE8002	1/5	241
590.GE8003	1/5	241
590.GE8003-C	1	259
590.GE8004	1/5	241
590.GE8005	1/5	241
590.GE8005-C	1	259
590.GE8006	1	241
590.GE8008	1	241
590.GEB10003		254
590.GEB10005		254
590.GEB12503		254
590.GEB12505		254
590.GEB16003		254
590.GEB16005		254
590.GEB6303		254
590.GEB6305		254
590.GEB8003		254
590.GEB8005		254
590.GED10003		254
590.GED10005		254
590.GED12503		254
590.GED12505		254
590.GED16003		254
590.GED16005	1	254
590.GED6303		254
590.GED6305		254
590.GED8003		254
590.GED8005	1	254
590.GEF1602		254
590.GEF1603		254
590.GEF1604		254
590.GEF1605		254
590.GEF3202		254

590		
Cat.numb.	Pack qty.	Page
590.GEF3203		254
590.GEF3204		254
590.GEF3205	1	254
590.GR2002	1/12	237
590.GR2003	1/12	237
590.GR2004	1/12	237
590.GR2005	1/12	237
590.GR3202	1/12	237
590.GR3203	1/12	237
590.GR3204	1/12	237
590.GR3205	1/12	237
590.GR4002	1/12	237
590.GR4003	1/12	237
590.GR4004	1/12	237
590.GR4005	1/12	237
590.HEL10003	1/5	247
590.HEL10005	1/5	247
590.HEL1606	1/5	245
590.HEL1608	1/5	245
590.HEL2002	1/12	245
590.HEL2003	1/12	245
590.HEL2005	1/12	245
590.HEL2506	1/5	245
590.HEL2508	1/5	245
590.HEL3202	1/12	245
590.HEL3203	1/12	245
590.HEL3205	1/12	245
590.HEL3206	1/5	245
590.HEL3208	1/5	245
590.HEL4002	1/12	245
590.HEL4003	1/12	245
590.HEL4005	1/12	245
590.HEL4006	1/5	245
590.HEL4008	1/5	245
590.HEL6302	1/5	247
590.HEL6303	1/5	247
590.HEL6305	1/5	247
590.HEL8002	1/5	247
590.HEL8003	1/5	247
590.HEL8005	1/5	247
590.HEM10003	1/5	248
590.HEM10003.W	1	249
590.HEM10005	1/5	248
590.HEM10005.W	1	249
590.HEM10006	1	248
590.HEM10008	1	248
590.HEM12503	1	248
590.HEM12503.W	1	249
590.HEM12505	1	248
590.HEM12505.W	1	249
590.HEM12506	1	248
590.HEM12508	1	248
590.HEM16003	1	248
590.HEM16003.W	1	249
590.HEM16005	1	248
590.HEM16005.W	1	249
590.HEM16006	1	248
590.HEM16008	1	248
590.HEM1606	1/5	246
590.HEM1608	1/5	246
590.HEM2002	1/12	246
590.HEM2003	1/12	246

590		
Cat.numb.	Pack qty.	Page
590.HEM2004	1/12	246
590.HEM2005	1/12	246
590.HEM2506	1/5	246
590.HEM2508	1/5	246
590.HEM3202	1/12	246
590.HEM3203	1/12	246
590.HEM3204	1/12	246
590.HEM3205	1/12	246
590.HEM3206	1/5	246
590.HEM3208	1/5	246
590.HEM4002	1/12	246
590.HEM4003	1/12	246
590.HEM4004	1/12	246
590.HEM4005	1/12	246
590.HEM4006	1/5	246
590.HEM4008	1/5	246
590.HEM6302	1/5	248
590.HEM6303	1/5	248
590.HEM6304	1/5	248
590.HEM6305	1/5	248
590.HEM6306	1	248
590.HEM6308	1	248
590.HEM8002	1/5	248
590.HEM8003	1/5	248
590.HEM8004	1/5	248
590.HEM8005	1/5	248
590.HEM8006	1	248
590.HEM8008	1	248
590.HEMB6303		255
590.HEMB6305		255
590.HEMB8003		255
590.HEMB8005		255
590.HEMD6303		255
590.HEMD6305		255
590.HEMD8003		255
590.HEMD8005		255
590.HEMF1602		255
590.HEMF1603		255
590.HEMF1604		255
590.HEMF1605		255
590.HEMF3202		255
590.HEMF3203		255
590.HEMF3204		255
590.HEMF3205		255
590.HGE10003	1/5	247
590.HGE10003-C	1	260
590.HGE10003.W	1	249
590.HGE10005	1/5	247
590.HGE10005-C	1	260
590.HGE10005.W	1	249
590.HGE10006	1	247
590.HGE10008	1	247
590.HGE12503	1	247
590.HGE12503-C	1	260
590.HGE12503.W	1	249
590.HGE12505	1	247
590.HGE12505-C	1	260
590.HGE12505.W	1	249
590.HGE12506	1	247
590.HGE12508	1	247
590.HGE16003	1	247
590.HGE16003-C	1	260

● = IMQ or other quality marks ✔ = new product ✦ = make to order

590		
Cat.numb.	Pack qty.	Page
590.HGE16003.W	1	249
590.HGE16005	1	247
590.HGE16005-C	1	260
590.HGE16005.W	1	249
590.HGE16006	1	247
590.HGE16008	1	247
590.HGE1603-C	1/5	260
590.HGE1605-C	1/5	260
590.HGE1606	1/5	245
590.HGE1608	1/5	245
590.HGE2002	1/12	245
590.HGE2003	1/12	245
590.HGE2004	1/12	245
590.HGE2005	1/12	245
590.HGE2503-C	1/5	260
590.HGE2505-C	1/5	260
590.HGE2506	1/5	245
590.HGE2508	1/5	245
590.HGE3202	1/12	245
590.HGE3203	1/12	245
590.HGE3203-C	1/5	260
590.HGE3204	1/12	245
590.HGE3205	1/12	245
590.HGE3205-C	1/5	260
590.HGE3206	1/5	245
590.HGE3208	1/5	245
590.HGE4002	1/12	245
590.HGE4003	1/12	245
590.HGE4003-C	1/5	260
590.HGE4004	1/12	245
590.HGE4005	1/12	245
590.HGE4005-C	1/5	260
590.HGE4006	1/5	245
590.HGE4008	1/5	245
590.HGE6302	1/5	247
590.HGE6303	1/5	247
590.HGE6303-C	1	260
590.HGE6304	1/5	247
590.HGE6305	1/5	247
590.HGE6305-C	1	260
590.HGE6306	1	247
590.HGE6308	1	247
590.HGE8002	1/5	247
590.HGE8003	1/5	247
590.HGE8003-C	1	260
590.HGE8004	1/5	247
590.HGE8005	1/5	247
590.HGE8005-C	1	260
590.HGE8006	1	247
590.HGE8008	1	247
590.HGEB6303		255
590.HGEB6305		255
590.HGEB8003		255
590.HGEB8005		255
590.HGED6303		255
590.HGED6305		255
590.HGED8003		255
590.HGED8005	1	255
590.HGEF1602		255
590.HGEF1603		255
590.HGEF1604		255
590.HGEF1605		255

590		
Cat.numb.	Pack qty.	Page
590.HGEF3202		255
590.HGEF3203		255
590.HGEF3204		255
590.HGEF3205	1	255
590.JEM2002	1/12	244
590.JEM2003	1/12	244
590.JEM2005	1/12	244
590.JEM3202	1/12	244
590.JEM3203	1/12	244
590.JEM3205	1/12	244
590.JEM4002	1/12	244
590.JEM4003	1/12	244
590.JEM4005	1/12	244
590.JGE2002	1/12	244
590.JGE2003	1/12	244
590.JGE2005	1/12	244
590.JGE3202	1/12	244
590.JGE3203	1/12	244
590.JGE3205	1/12	244
590.JGE4002	1/12	244
590.JGE4003	1/12	244
590.JGE4005	1/12	244
590.K100003B	1	223
590.K100005B	1	223
590.K125003B	1	223
590.K125005B	1	223
590.K160003B	1	223
590.K160005B	1	223
590.K16003B	1	223
590.K16005B	1	223
590.K20003B	1	223
590.K20005B	1	223
590.K25003B	1	223
590.K25005B	1	223
590.K31503B	1	223
590.K31505B	1	223
590.K40003B	1	223
590.K40005B	1	223
590.K50003B	1	223
590.K50005B	1	223
590.K63003B	1	223
590.K63005B	1	223
590.K80003B	1	223
590.K80005B	1	223
590.KEM100003	1	251
590.KEM100005	1	251
590.KEM125003	1	251
590.KEM125005	1	251
590.KEM160003	1	251
590.KEM160005	1	251
590.KEM16003	1	251
590.KEM16005	1	251
590.KEM20003	1	251
590.KEM20005	1	251
590.KEM25003	1	251
590.KEM25005	1	251
590.KEM31503	1	251
590.KEM31505	1	251
590.KEM40003	1	251
590.KEM40005	1	251
590.KEM50003	1	251
590.KEM50005	1	251

590		
Cat.numb.	Pack qty.	Page
590.KEM63003	1	251
590.KEM63005	1	251
590.KEM80003	1	251
590.KEM80005	1	251
590.KEMB10003		257
590.KEMB10005		257
590.KEMB12503		257
590.KEMB12505		257
590.KEMB16003		257
590.KEMB16005		257
590.KEMB20003		257
590.KEMB20005		257
590.KEMB25003		257
590.KEMB25005		257
590.KEMB31503		257
590.KEMB31505		257
590.KEMB40003		257
590.KEMB40005		257
590.KEMB63003		257
590.KEMB63005		257
590.KEMD10003		256
590.KEMD10005		256
590.KEMD12503		256
590.KEMD12505		256
590.KEMD16003		256
590.KEMD16005		256
590.KEMD20003		256
590.KEMD20005		256
590.KEMD25003		256
590.KEMD25005		256
590.KEMD31503		256
590.KEMD31505		256
590.KEMD40003		256
590.KEMD40005		256
590.KEMD63003		256
590.KEMD63005		256
590.KFB10003B	1	225
590.KFB10005B	1	225
590.KFB12503B	1	225
590.KFB12505B	1	225
590.KFB16003B	1	225
590.KFB16005B	1	225
590.KFB20003B	1	225
590.KFB20005B	1	225
590.KFB25003B	1	225
590.KFB25005B	1	225
590.KFB31503B	1	225
590.KFB31505B	1	225
590.KFB40003B	1	225
590.KFB40005B	1	225
590.KFB63003B	1	225
590.KFB63005B	1	225
590.KFB6303B	1	225
590.KFB6305B	1	225
590.KFB8003B	1	225
590.KFB8005B	1	225
590.KFD10003B	1	226
590.KFD10005B	1	226
590.KFD12503B	1	226
590.KFD12505B	1	226
590.KFD16003B	1	226
590.KFD16005B	1	226

590		
Cat.numb.	Pack qty.	Page
590.KFD20003B	1	226
590.KFD20005B	1	226
590.KFD25003B	1	226
590.KFD25005B	1	226
590.KFD31503B	1	226
590.KFD31505B	1	226
590.KFD40003B	1	226
590.KFD40005B	1	226
590.KFD63003B	1	226
590.KFD63005B	1	226
590.KFD6303B	1	226
590.KFD6305B	1	226
590.KFD8003B	1	226
590.KFD8005B	1	226
590.KFS1	1/6	235
590.KFS2	1/6	235
590.KFS3	1/10	235
590.KFS4	1/10	235
590.KFS5	1/10	235
590.KGE100003	1	251
590.KGE100003B	1	252
590.KGE100005	1	251
590.KGE100005B		252
590.KGE125003	1	251
590.KGE125003B	1	252
590.KGE125005	1	251
590.KGE125005B		252
590.KGE160003	1	251
590.KGE160003B	1	252
590.KGE160005	1	251
590.KGE160005B		252
590.KGE16003	1	251
590.KGE16003B	1	252
590.KGE16005	1	251
590.KGE16005B	1	252
590.KGE20003	1	251
590.KGE20003B	1	252
590.KGE20005	1	251
590.KGE20005B	1	252
590.KGE25003	1	251
590.KGE25003B	1	252
590.KGE25005	1	251
590.KGE25005B	1	252
590.KGE31503	1	251
590.KGE31503B	1	252
590.KGE31505	1	251
590.KGE31505B	1	252
590.KGE40003	1	251
590.KGE40003B	1	252
590.KGE40005	1	251
590.KGE40005B	1	252
590.KGE50003	1	251
590.KGE50003B	1	252
590.KGE50005	1	251
590.KGE50005B	1	252
590.KGE63003	1	251
590.KGE63003B	1	252
590.KGE63005	1	251
590.KGE63005B	1	252
590.KGE80003	1	251
590.KGE80003B	1	252
590.KGE80005	1	251

Index by product number

590		
Cat.numb.	Pack qty.	Page
590.KGE80005B	1	252
590.KGEB10003		257
590.KGEB10003B		258
590.KGEB10005		257
590.KGEB10005B		258
590.KGEB12503		257
590.KGEB12503B		258
590.KGEB12505		257
590.KGEB12505B		258
590.KGEB16003		257
590.KGEB16003B		258
590.KGEB16005		257
590.KGEB16005B		258
590.KGEB20003		257
590.KGEB20003B		258
590.KGEB20005		257
590.KGEB20005B		258
590.KGEB25003		257
590.KGEB25003B		258
590.KGEB25005		257
590.KGEB25005B		258
590.KGEB31503		257
590.KGEB31505		257
590.KGEB40003		257
590.KGEB40005		257
590.KGEB63003		257
590.KGEB63005		257
590.KGED10003		256
590.KGED10003B		258
590.KGED10005		256
590.KGED10005B		258
590.KGED12503		256
590.KGED12503B		258
590.KGED12505		256
590.KGED12505B		258
590.KGED16003		256
590.KGED16003B		258
590.KGED16005	1	256
590.KGED16005B	1	258
590.KGED20003		256
590.KGED20003B		258
590.KGED20005		256
590.KGED20005B		258
590.KGED25003		256
590.KGED25003B		258
590.KGED25005	1	256
590.KGED25005B	1	258
590.KGED31503		256
590.KGED31505		256
590.KGED40003		256
590.KGED40005	1	256
590.KGED63003		256
590.KGED63005	1	256
590.KMA200A	10	233
590.KMA200B	10	233
590.KMA300A	10	233
590.KMA300B	10	233
590.KMA400A	10	233
590.KMA400B	10	233
590.KMM100EM	10	232
590.KMM100GE	10	232
590.KMM300EM	10	232

590		
Cat.numb.	Pack qty.	Page
590.KMM300GE	10	232
590.KMM500EM	10	232
590.KMM500GE	10	232
590.KMM550EM	10	232
590.KMM550GE	10	232
590.KMM600EM	10	232
590.KMM600GE	10	232
590.KMT11	10	234
590.KMT12	10	234
590.KMT21	10	234
590.KMT22	10	234
590.KMT31	10	234
590.KMT32	10	234
590.KMT41	10	234
590.KMT42	10	234
590.KMT51	10	234
590.KMT52	10	234
590.PCF	10	269
590.PG1M9W01	12	272
590.PG8M9W10	12	272
590.PL004001	10/60	117
590.PL004002	10/60	117
590.PL004003	10	117
590.PL004004	10	117
590.PL004007	10/60	268
590.PL005	50	236
590.PL006011	10	236
590.PL006012	10	236
590.PL006013	10	236
590.PL006021	10	236
590.PL006022	10	236
590.PL006023	10	236
590.PLML1L220	10	268
590.PLML2L220	10	268
590.PLML3L220	10	268
590.PLML4L220	10	268
590.PLML5L220	10	268
590.PPFN1C4N	1/10	266
590.PPFN1M4N	1/10	266
590.PPFN1R4N	1/10	266
590.PPFN1R6N	1/10	266
590.PPRL2	1/10	266
590.PPRL5	1/10	266
590.PPRN1	1/10	265
590.PPRN2	1/10	265
590.PPRN5	1/10	265
590.PPRN8	1/10	265
590.PPSN1	1/10	265
590.PPSN8	1/10	265
590.PPTN8	10/100	269
590.PR01C4N	1/12	273
590.PR01K	1/12	271
590.PR01R4N	1/12	273
590.PR01R4S	1/12	273
590.PR01R6N	12	272
590.PR01RN8	1/12	272
590.PR02A	1/10	272
590.PR02K	1/10	271
590.PR03A	1/10	272
590.PR03K	1/10	271
590.PR04K		271
590.PR06K		271

590		
Cat.numb.	Pack qty.	Page
590.PSCR8D0C	10	267
590.PSCR8T0C	10	267
590.PSLN8D0	1/10	267
590.PSLN8D2	1/10	267
590.PSLN8T0	1/10	267
590.PSLN8T3	1/10	267
590.PTA00	10/100	269
590.PTE/A	10/100	270
590.PTE/I	10/100	270
590.PTRN8	10/100	270
590.SEM10003	1/5	250
590.SEM10005	1/5	250
590.SEM10006	1/5	250
590.SEM12503	1/5	250
590.SEM12505	1/5	250
590.SEM12506	1/5	250
590.SEM16003	1	250
590.SEM16005	1	250
590.SEM16006	1	250
590.SEM1606	1/12	250
590.SEM2002	1/12	250
590.SEM2003	1/12	250
590.SEM2005	1	250
590.SEM2506	1/12	250
590.SEM3202	1/12	250
590.SEM3203	1/12	250
590.SEM3205	1	250
590.SEM3206	1/12	250
590.SEM4002	1/12	250
590.SEM4003	1/12	250
590.SEM4005	1/12	250
590.SEM4006	1/12	250
590.SEM6303	1/5	250
590.SEM6305	1/5	250
590.SEM6306	1/5	250
590.SEM8003	1/5	250
590.SEM8005	1/5	250
590.SEM8006	1/5	250
590.SGE10003	1/5	250
590.SGE10003-C	1/12	261
590.SGE10005	1/5	250
590.SGE10005-C	1/12	261
590.SGE10006	1	250
590.SGE12503	1/5	250
590.SGE12503-C	1/12	261
590.SGE12505	1/5	250
590.SGE12505-C	1/12	261
590.SGE12506	1/5	250
590.SGE16003	1	250
590.SGE16003-C	1/12	261
590.SGE16005	1	250
590.SGE16005-C	1/12	261
590.SGE16006	1	250
590.SGE1603-C	1/12	261
590.SGE1605-C	1/12	261
590.SGE1606	1/12	250
590.SGE2002	1/12	250
590.SGE2003	1/12	250
590.SGE2005	1/12	250
590.SGE2503-C	1/12	261
590.SGE2505-C	1/12	261
590.SGE2506	1/12	250

590		
Cat.numb.	Pack qty.	Page
590.SGE3202	1/12	250
590.SGE3203	1/12	250
590.SGE3203-C	1/12	261
590.SGE3205	1	250
590.SGE3205-C	1/12	261
590.SGE3206	1/12	250
590.SGE4002	1/12	250
590.SGE4003	1	250
590.SGE4003-C	1/12	261
590.SGE4005	1/12	250
590.SGE4005-C	1/12	261
590.SGE4006	1	250
590.SGE6303	1	250
590.SGE6303-C	1/12	261
590.SGE6305	1	250
590.SGE6305-C	1/12	261
590.SGE6306	1/5	250
590.SGE8003	1/5	250
590.SGE8003-C	1/12	261
590.SGE8005	1/5	250
590.SGE8005-C	1/12	261
590.SGE8006	1/5	250
590.YA1003B	6	221
590.YA1003B-C	6	227
590.YA1003R	6	222
590.YA1004B	6	221
590.YA1004R	6	222
590.YA1005B	6	221
590.YA1005B-C	6	227
590.YA1006B	6	221
590.YA1008B	6	221
590.YA1253B	6	221
590.YA1253B-C	6	227
590.YA1255B	6	221
590.YA1255B-C	6	227
590.YA1256B	6	221
590.YA1258B	6	221
590.YA1603B	5	221
590.YA1603B-C	6	227
590.YA1605B	5	221
590.YA1605B-C	6	227
590.YA1606B	6	221
590.YA1608B	6	221
590.YA162B	6	220
590.YA162R	6	222
590.YA163B	6	220
590.YA163B-C	6	227
590.YA163R	6	222
590.YA164B	6	220
590.YA164R	6	222
590.YA165B	6	220
590.YA165B-C	6	227
590.YA165R	6	222
590.YA166B	6	220
590.YA168B	6	220
590.YA202B	6	220
590.YA203B	6	220
590.YA204B	6	220
590.YA205B	6	220
590.YA253B-C	6	227
590.YA255B-C	6	227
590.YA256B	6	220

= IMQ or other quality marks = new product = make to order

590

Cat.numb.	Pack qty.	Page
590.YA258B	6	220
590.YA322B	6	220
590.YA322R	6	222
590.YA323B	6	220
590.YA323B-C	6	227
590.YA323R	6	222
590.YA324B	6	220
590.YA324R	6	222
590.YA325B	6	220
590.YA325B-C	6	227
590.YA325R	6	222
590.YA326B	6	220
590.YA328B	6	220
590.YA402B	6	220
590.YA402R	6	222
590.YA403B	6	220
590.YA403B-C	6	227
590.YA403R	6	222
590.YA404B	6	220
590.YA404R	6	222
590.YA405B	6	220
590.YA405B-C	6	227
590.YA405R	6	222
590.YA406B	6	220
590.YA408B	6	220
590.YA632B	6	221
590.YA632R	6	222
590.YA633B	6	221
590.YA633B-C	6	227
590.YA633R	6	222
590.YA634B	6	221
590.YA634R	6	222
590.YA635B	6	221
590.YA635B-C	6	227
590.YA635R	6	222
590.YA636B	6	221
590.YA638B	6	221
590.YA802B	6	221
590.YA802R	6	222
590.YA803B	6	221
590.YA803B-C	6	227
590.YA803R	6	222
590.YA804B	6	221
590.YA804R	6	222
590.YA805B	6	221
590.YA805B-C	6	227
590.YA805R	6	222
590.YA806B	6	221
590.YA808B	6	221
590.YF162B	6	224
590.YF163B	6	224
590.YF164B	6	224
590.YF165B	6	224
590.YF322B	6	224
590.YF323B	6	224
590.YF324B	6	224
590.YF325B	6	224
590.YM48B1	1/10	228
590.YM48B2	1/10	228
590.YM48R1	1/10	228
590.YM48R2	1/10	228
590.YM49B1	1/10	228

590

Cat.numb.	Pack qty.	Page
590.YM49B2	1/10	228
590.YM49R1	1/10	228
590.YM49R2	1/10	228
590.YM50B1	10	228
590.YM50B2	10	228
590.YM50R1	10	228
590.YM50R2	10	228
590.YM51B1	10	228
590.YM51B2	10	228
590.YM51R1	10	228
590.YM51R2	10	228
590.YM67B1	1/10	229
590.YM67B2	1/10	229
590.YM67B6	1/10	229
590.YM67B7	1/10	229
590.YM67R1	1/10	229
590.YM67R2	1/10	229
590.YM67R6	1/10	229
590.YM67R7	1/10	229
590.YM68B1	10	229
590.YM68B2	10	229
590.YM68B6	10	229
590.YM68B7	10	229
590.YM68R1	10	229
590.YM68R2	10	229
590.YM70R1	10	230
590.YM70R2	10	230
590.YM70R6	10	230
590.YM70R7	10	230
590.YM80B1	5	229
590.YM80B2	5	229
590.YM80B2-C	1/10	229
590.YMA070	10/100	233
590.YMA085	10/100	233
590.YMA101	10/100	233
590.YMA102		0
590.YMA185	10/100	233
590.YMA201	10/100	233
590.YMA202		0
590.YMA300	10	233
590.YMA301	10/100	233
590.YMA302		0
590.YMB085	10/100	233
590.YMB185	10/100	233
590.YMB300	10	233
590.YMC1	10	230
590.YMC2	10	230
590.YMDIN	10	231
590.YMZZ	10/50	233

600

Cat.numb.	Pack qty.	Page
600.1623	1/6	431
600.1624	1/6	431
600.1626	1/6	431
600.1626/I	1/6	431
600.1627	1/6	431
600.1629	1/6	431

601

Cat.numb.	Pack qty.	Page
601.1623	1/6	431
601.1626	1/6	431
601.1627	1/6	431
601.1629	1/6	431

602

Cat.numb.	Pack qty.	Page
602.3005-059	1/6	434
602.3005-061	1/6	434
602.3005-062	1/6	434
602.3005-063	1/6	434
602.3005-064	1/6	434
602.3005-215	1/6	434
602.3505-059	1/6	434
602.3505-061	1/6	434
602.3505-062	1/6	434
602.3505-063	1/6	434
602.3505-064	1/6	434
602.3505-443	1/6	434
602.5005-358	1/6	435
602.5005-359	1/6	435
602.5005-360	1/6	435

603

Cat.numb.	Pack qty.	Page
603.3005-000	1/10	317
603.3005-059	1/10	433
603.3005-061	1/10	433
603.3005-062	1/10	433
603.3005-063	1/10	433
603.3005-064	1/10	433
603.3505-059	1/10	433
603.3505-061	1/10	433
603.3505-062	1/10	433
603.3505-063	1/10	433
603.3505-064	1/10	433
603.5005-358	1/10	434
603.5005-359	1/10	434
603.5005-360	1/10	434
603.5005-415	1/10	434
603.5005-427	1/10	434
603.83505-059		183
603.83505-061	1/10	183
603.83505-062	1/10	183
603.83505-063		183
603.83505-064		183

604

Cat.numb.	Pack qty.	Page
604.1623/C	1/6	432
604.1626/C	1/6	432
604.1626/I-C	1/6	432
604.1627/C	1/6	432
604.1629/C	1/6	432
604.3226/C	1/6	432
604.3227/C	1/6	432

605

Cat.numb.	Pack qty.	Page
605.1623/C	1/6	432
605.1626/C	1/6	432
605.1627/C	1/6	432
605.1629/C	1/6	432
605.3226/C	1/6	432
605.3227/C	1/6	432

606

Cat.numb.	Pack qty.	Page
606.3005-059	1/6	432
606.3005-062	1/6	432
606.3005-063	1/6	432
606.3005-479	1/6	432
606.3015-059	1/6	433
606.3015-062	1/6	433
606.3015-063	1/6	433
606.3015-479	1/6	433
606.3015-740	6	433
606.3505-059	1/6	432
606.3505-062	1/6	432
606.3505-063	1/6	432
606.3505-479	1/6	432
606.3515-059	1/6	433
606.3515-062	1/6	433
606.3515-063	1/6	433
606.3515-479	1/6	433

610

Cat.numb.	Pack qty.	Page
610.3444	10/50	430
610.3464	10	430
610.3646	10/50	430
610.3666	10	430
610.367	10/100	428
610.368	10/100	426
610.369	10/100	429
610.370	10/100	426
610.371	10/100	426
610.372	10/100	426
610.373	10/100	426
610.374	10/100	427
610.3746	10	431
610.3747	10/50	430
610.375	10/100	427
610.376	10/100	427
610.377	10/100	428
610.378	10/100	429
610.379	10/100	428
610.380	10/100	426
610.380.N	10/100	177
610.381	10/100	427
610.382	10/100	427
610.383	10/100	428
610.384	10/100	428
610.384.N	10/100	177
610.388	10/100	427
610.388.N	10/100	177
610.390	10/100	427

= IMQ or other quality marks ✔ = new product ✦ = make to order

Index by product number

610		
Cat.numb.	Pack qty.	Page
610.391	10/100	427
610.392	10/100	427
610.394	10/100	429
610.395	10/100	428

623		
Cat.numb.	Pack qty.	Page
623.3000-056	1	435
623.3000-062	1	435
623.3000-063	1	435
623.3006-054	1	436
623.3006-062	1	436
623.3006-063	1	436
623.3500-000	1/4	317
623.3500-062	1	435
623.3500-063	1	435
623.3506-062	1	436
623.3506-063	1	436
623.4005-003	1	437
623.4005-006	1	437
623.4005-010	1	437
623.4005-012	1	437
623.4500-000	1/4	317
623.4505-003	1	437
623.4505-006	1	437
623.4505-012	1	437

625		
Cat.numb.	Pack qty.	Page
625.3500-000	1/4	317
625.3500-059	1	436
625.3500-060	1	436
625.3500-062	1	436
625.3500-063	1	436
625.3506-059	1	437
625.3506-060	1	437
625.3506-062	1	437
625.4500-000	1/4	317
625.4505-003	1	438
625.4505-012	1	438

630		
Cat.numb.	Pack qty.	Page
630.001	1	410
630.002	1	410
630.011	1	411
630.012	1	411
630.021	1	412
630.022	1	412
630.031	1	413
630.032	1	413
630.3000-052	1	388
630.3000-054	1	388
630.3000-055	1	388
630.3000-056	1	388
630.3000-059	1	388

630		
Cat.numb.	Pack qty.	Page
630.3000-060	1	388
630.3000-062	1	388
630.3000-063	1	388
630.3000-401	1	388
630.3006-052	1	390
630.3006-054	1	390
630.3006-055	1	390
630.3006-056	1	390
630.3006-059	1	391
630.3006-060	1	391
630.3006-062	1	391
630.3006-063	1	391
630.3006-362	1	390
630.3500-059	1	388
630.3500-060	1	388
630.3500-062	1	388
630.3500-063	1	388
630.3506-052	1	391
630.3506-054	1	391
630.3506-055	1	391
630.3506-056	1	391
630.3506-059	1	391
630.3506-060	1	391
630.3506-062	1	391
630.3506-063	1	391
630.3506-362	1	391
630.4000-001	1	389
630.4000-002	1	389
630.4000-003	1	389
630.4000-006	1	389
630.4000-007	1	389
630.4000-008	1	389
630.4000-010	1	389
630.4000-012	1	389
630.4000-013	1	389
630.4000-326	1	389
630.4000-327	1	389
630.4000-328	1	389
630.4000-329	1	389
630.4006-001	1	392
630.4006-002	1	392
630.4006-003	1	392
630.4006-006	1	392
630.4006-007	1	392
630.4006-008	1	392
630.4006-010	1	392
630.4006-012	1	392
630.4006-013	1	392
630.4006-188	1	392
630.4009-014	1	394
630.4009-016	1	394
630.4009-017	1	394
630.4009-323	1	394
630.4106-003	1	393
630.4106-006	1	393
630.4106-008	1	393
630.4106-012	1	393
630.4106-013	1	393
630.4500-003	1	389
630.4500-006	1	389
630.4500-007	1	389
630.4500-008	1	389

630		
Cat.numb.	Pack qty.	Page
630.4500-012	1	389
630.4500-013	1	389
630.4500-326	1	389
630.4500-327	1	389
630.4500-328	1	389
630.4500-329	1	389
630.4506-001	1	392
630.4506-002	1	392
630.4506-003	1	392
630.4506-006	1	392
630.4506-007	1	392
630.4506-008	1	392
630.4506-010	1	392
630.4506-012	1	392
630.4506-013	1	392
630.4509-014	1	394
630.4509-016	1	394
630.4509-017	1	394
630.4509-323	1	394
630.4606-003	1	393
630.4606-008	1	393
630.4606-012	1	393
630.4606-013	1	393

632		
Cat.numb.	Pack qty.	Page
632.1500-000	4	308
632.1510-000	4	308
632.1530-000	4	310
632.3000-052	1	395
632.3000-054	1	395
632.3000-055	1	395
632.3000-056	1	395
632.3000-059	1	395
632.3000-060	1	395
632.3000-062	1	395
632.3000-063	1	395
632.3005-052	1	399
632.3005-054	1	399
632.3005-055	1	399
632.3005-056	1	399
632.3005-059	1	399
632.3005-060	1	399
632.3005-062	1	399
632.3005-063	1	399
632.3006-052	1	397
632.3006-054	1	397
632.3006-055	1	397
632.3006-056	1	397
632.3006-059	1	397
632.3006-060	1	397
632.3006-062	1	397
632.3006-063	1	397
632.3006-324	1	397
632.3006-325	1	397
632.3500-000	4	308
632.3500-059	1	395
632.3500-060	1	395
632.3500-062	1	395
632.3500-063	1	395

632		
Cat.numb.	Pack qty.	Page
632.3501-000	4	309
632.3505-059	1	399
632.3505-060	1	399
632.3505-062	1	399
632.3505-063	1	399
632.3506-059	1	397
632.3506-060	1	397
632.3506-062	1	397
632.3506-063	1	397
632.3506-324	1	397
632.3506-325	1	397
632.3510-000	4	308
632.3511-000	4	309
632.3520-000	4	310
632.3530-000	4	311
632.4000-001	1	396
632.4000-002	1	396
632.4000-003	1	396
632.4000-006	1	396
632.4000-007	1	396
632.4000-008	1	396
632.4000-010	1	396
632.4000-012	1	396
632.4000-013	1	396
632.4000-328	1	396
632.4000-329	1	396
632.4000-342	1	396
632.4005-001	1	401
632.4005-002	1	401
632.4005-003	1	401
632.4005-006	1	401
632.4005-007	1	401
632.4005-008	1	401
632.4005-010	1	401
632.4005-012	1	401
632.4005-013	1	401
632.4005-326	1	401
632.4005-327	1	401
632.4005-328	1	401
632.4005-329	1	401
632.4006-001	1	398
632.4006-002	1	398
632.4006-003	1	398
632.4006-006	1	398
632.4006-007	1	398
632.4006-008	1	398
632.4006-010	1	398
632.4006-012	1	398
632.4006-013	1	398
632.4006-328	1	398
632.4006-329	1	398
632.4009-014	1	402
632.4009-015	1	402
632.4009-016	1	402
632.4009-017	1	402
632.4500-000	4	309
632.4500-003	1	396
632.4500-006	1	396
632.4500-007	1	396
632.4500-008	1	396
632.4500-012	1	396
632.4500-013	1	396

= IMQ or other quality marks ✔ = new product ✦ = make to order

632

Cat.numb.	Pack qty.	Page
632.4500-328	1	396
632.4500-329	1	396
632.4505-003	1	401
632.4505-006	1	401
632.4505-007	1	401
632.4505-008	1	401
632.4505-012	1	401
632.4505-013	1	401
632.4505-326	1	401
632.4505-327	1	401
632.4505-328	1	401
632.4505-329	1	401
632.4506-003	1	398
632.4506-006	1	398
632.4506-007	1	398
632.4506-008	1	398
632.4506-012	1	398
632.4506-013	1	398
632.4506-188	1	398
632.4506-328	1	398
632.4506-329	1	398
632.4509-014	1	402
632.4509-015	1	402
632.4509-016	1	402
632.4509-017	1	402
632.4510-000	4	309
632.4520-000	4	311
632.4530-000	4	311
632.4700-000	4	309
632.4710-000	4	309
632.5500-000	2	309
632.5510-000	2	309
632.5520-000	2	311

633

Cat.numb.	Pack qty.	Page
633.1010	12	315
633.1011	12	316
633.1012	12	316
633.1013	12	316
633.1014	12	316
633.2020	6	315
633.2021	6	316
633.2022	6	316
633.2023	6	316
633.2024	6	316
633.2025	6	316
633.2026	6	316

639

Cat.numb.	Pack qty.	Page
639.1040	26	355
639.1060	38	355
639.1080	25	355
639.2040	24	355
639.2060	18	355
639.2080	12	355
639.2120	8	355

639

Cat.numb.	Pack qty.	Page
639.4060	8	355
639.4080	6	355
639.4120	4	355

653

Cat.numb.	Pack qty.	Page
653.00	1/32	360
653.01	1/24	360
653.011	1/40	361
653.012	1/20	361
653.013	1/20	361
653.014	1/10	361
653.015	1/10	361
653.017	1/5	361
653.02	1/16	360
653.020	1/25	361
653.021	1/25	361
653.022	1/20	361
653.023	1/25	361
653.024	1/20	361
653.025	1/30	361
653.027	1/50	361
653.03	1/12	360
653.04	1/6	360
653.05	1/2	360
653.07	1	360

654

Cat.numb.	Pack qty.	Page
654.0002	10	327
654.0003	10	327
654.0010	1/12	0
654.0020	1/10	292
654.0021	1/10	349
654.0022	100/2000	349
654.0023	1/10	349
654.0024	10	327
654.0025	50	307
654.0026	15	307
654.0030	1/25	297
654.0032	1/25	350
654.0033	1/25	297
654.0038	25	293
654.0040	1/25	293
654.0041	6/60	294
654.0041B	6/60	294
654.0042	6/60	294
654.0042B	6/60	294
654.0043	6	294
654.0043B	6	294
654.0044	6	294
654.0044B	6	294
654.0045	6/72	295
654.0046	200	295
654.0050	10	318
654.0051	10	327
654.0060	1/10	297
654.0070	1/10	297

654

Cat.numb.	Pack qty.	Page
654.0071	1/10	325
654.0072	1/10	297
654.0073	10	0
654.0074	10	307
654.0077	10	344
654.0079	1/10	132
654.0080	10/100	350
654.0085	1/20	350
654.0090	20/100	298
654.0091	12/120	298
654.0092	12/120	298
654.0100	25	300
654.0101	25	270
654.0101Y	25	270
654.0102	25	270
654.0103	25	91
654.0105	25	310
654.0108	5	94
654.0120	6/72	116
654.0121	6	116
654.0122	6	116
654.0125	6/72	116
654.0126	6/72	116
654.0140	50	344
654.0140-06	10	344
654.0140-08	10	344
654.0140-12	10	344
654.0141-06	10	344
654.0141-08	10	344
654.0141-12	10	344
654.0180-04	10	422
654.0180-06	10	422
654.0180-08	10	422
654.0180-12	10	422
654.0180-16	1/10	422
654.0180-24		422
654.0181-01	1/10	422
654.0181-03	5/10	422
654.0181-04	5/10	422
654.0181-04Y	5/10	422
654.0181-05	5/10	422
654.0181-07		422
654.0190	10	422
654.0191	10	422
654.0205	1	313
654.0207	1	313
654.0210	1	301
654.0220	1	301
654.0349	10/100	305
654.0358	1/10	303
654.0359	1/10	303
654.0360	1/10	305
654.0361	1/10	304
654.0361C	10	304
654.0362	1/10	304
654.0362C	10	304
654.0363	1/10	303
654.0364	1/10	305
654.0364C	10	305
654.0365	10	303
654.0376	20/200	625
654.0377	25	307

654

Cat.numb.	Pack qty.	Page
654.0382	10/100	95
654.0391	10	95
654.0392	10	95
654.0393	10	95
654.0394	10	95
654.0400	25	117
654.0400B	25	299
654.0401	5/20	336
654.0410	25/250	117
654.0420	25/400	117
654.0600	2	314
654.0610	1	115
654.0615		296
654.0650	1	292
654.0651	1	0
654.0652	2	292
654.0653	2	292
654.0654	2	292
654.0655	4	292
654.0656	4	292
654.0657	1	292
654.0658	1	0
654.0700	1	293
654.0710	1	293
654.0750	1/10	299
654.0751	1/10	299
654.0752	10	299
654.0753	10	299
654.0787	1/30	349
654.0788	1/20	349
654.0789	1/15	349
654.0790	1/10	349
654.0791	1/10	349
654.11163		423
654.11164		423
654.11165		423
654.11324	5/25	423
654.11325		423
654.11634		423
654.11635		423
654.12324	25	423
654.12325	25	423
654.13163		423
654.13164		423
654.13165	5/25	423
654.13324		423
654.13325	5/25	423
654.13634		423
654.13635		423
654.161253		423
654.161255		423
654.16163	25	423
654.16164		423
654.16165		423
654.16323		423
654.16324		423
654.16325		423
654.16633		423
654.16635		423
654.2110	5/10	422
654.2111		422
654.906396	1	328

Index by product number

654		
Cat.numb.	Pack qty.	Page
654.906397	1	328
654.912597	1	328

655		
Cat.numb.	Pack qty.	Page
655.0010	1	329
655.0011	1	330
655.0012	1	331
655.0014	1/4	331
655.0015	1/4	331
655.0016	1/8	331
655.0019	1/8	332
655.0020	1	329
655.0020-K40	1	330
655.0021	1	330
655.0022	1	331
655.0024	1/4	331
655.0025	1/4	331
655.0026	1/9	331
655.0030	1	329
655.0030-K60	1	330
655.0031	1	330
655.0032	1	331
655.0034	1/2	331
655.0035	1/2	331
655.0036	1/9	331
655.0039	1/10	332
655.0040	1	329
655.0040-K80	1	330
655.0041	1	330
655.0042	1	331
655.0044	1/2	331
655.0045	1/2	331
655.0046	1/9	331
655.0050	1	329
655.0051	1	330
655.0052	1	331
655.0054	1/2	331
655.0055	1/2	331
655.00550	1/5	332
655.0056	1/2	331
655.00560	1/4	332
655.0059	1/6	332
655.0110	1	329
655.0111	1	330
655.0112	1	331
655.0120	1	329
655.0121	1	330
655.0122	1	331
655.0130	1	329
655.0131	1	330
655.0132	1	331
655.0140	1	329
655.0141	1	330
655.0142	1	331
655.0150	1	329
655.0151	1	330
655.0152	1	331
655.02101	1	329
655.02201	1	329

655		
Cat.numb.	Pack qty.	Page
655.02301	1	329
655.02401	1	329
655.02501	1	329
655.32010	1/10	333
655.32011	1/8	333
655.32012	1/4	333
655.32020	1/5	333
655.32021	1/8	334
655.32022	1/10	334
655.32024	1/5	334
655.32090	1/3	335
655.46010	1/18	333
655.46011	1/8	333
655.46012	1/4	333
655.46020	1/4	333
655.46021	1/10	334
655.46022	1/10	334
655.46024	1/4	334
655.46025	1/9	334
655.46090	1/3	335
655.75010	1/20	333
655.75011	1/6	333
655.75012	1/6	333
655.75020	1/12	333
655.75021	1/24	334
655.75022	1/16	334
655.75023	1/18	334
655.75024	1/10	334
655.75090	1	335
655.900	10	335
655.910	1/10	335
655.911	1/10	335
655.920	1/10	335
655.930	1/10	335
655.950	1	335
655.960	1/10	335
655.970	1/10	335

656		
Cat.numb.	Pack qty.	Page
656.0010	10	324
656.0012		324
656.0024-000	1	320
656.0024-000L	1	320
656.0026-000	1	320
656.0026-000L	1	320
656.0110	5/10	324
656.0120	1	325
656.0220	1	326
656.0221	1	326
656.0222	1	326
656.0300		322
656.0320	10	322
656.0420	10	325
656.0924-000	1	320
656.0924-000L	1	320
656.0926-000	1	320
656.0926-000L	1	320
656.7024-006	1	377
656.7024-008	1	377

656		
Cat.numb.	Pack qty.	Page
656.7024-056	1	377
656.7024-611	1	377
656.7026-639	1	379
656.7026-640	1	379
656.7026-739	1	379
656.7124-006	1	377
656.7124-008	1	377
656.7124-056	1	377
656.7124-611	1	377
656.7126-639	1	379
656.7126-640	1	379
656.7824-006	1	377
656.7824-008	1	377
656.7824-611	1	377
656.7826-639	1	379
656.7826-640	1	379
656.7926-639	1	379
656.7926-640	1	379
656.9024-613	1	0
656.9024-614	1	0

657		
Cat.numb.	Pack qty.	Page
657.0014		324
657.0035-000	1	321
657.0036-000	1	321
657.0038-000	1	321
657.0121	1	325
657.0330	10	322
657.0331	10	323
657.0332	10	323
657.0333	10	323
657.0340	10	322
657.0341	10	323
657.0342	10	323
657.0343	10	323
657.0421	10	325
657.0935-000	1	321
657.0936-000	1	321
657.0938-000	1	321
657.8034-006	1	377
657.8034-008	1	377
657.8035-012	1	377
657.8035-013	1	377
657.8035-087	1	377
657.8135-012	1	377
657.8135-013	1	377
657.8135-087	1	377
657.8835-012	1	377
657.8835-013	1	377
657.8835-087	1	377
657.8839-825	1	381
657.8839-826	1	381
657.8839-827	1	381
657.8935-012	1	377
657.8935-013	1	377
657.8935-087	1	377

658		
Cat.numb.	Pack qty.	Page
658.0016		324
658.0050-000	1	321
658.0350	10	322
658.0351	10	323
658.0352	10	323
658.0353	10	323
658.0360	10	322
658.0361	10	323
658.0362	10	323
658.0363	10	323
658.0369	10	324
658.0422	10	325
658.0950-000	1	321
658.8050-702	1	379
658.8050-705	1	379
658.8056-138	1	379
658.8058-040	1	379
658.8059-043	1	379
658.8150-702	1	379
658.8156-138	1	379
658.8158-040	1	379
658.8159-043	1	379
658.8850-702	1	379
658.8850-705	1	379
658.8856-138	1	379
658.8950-702	1	379
658.8950-705	1	379
658.8956-138	1	379
658.8959-043	1	379

659		
Cat.numb.	Pack qty.	Page
659.BA5040-00		337
659.BA5140-02		403
659.DA5041-00		337
659.DA5081-00		337
659.DA5121-01	1	403
659.DA5141-02	1	403
659.DA5141-04	1	403
659.DA5181-03	1	403
659.DA5181-05	1	403
659.DA5221-01	1	406
659.DA5241-02	1	406
659.DA5241-04	1	406
659.DA5281-03	1	406
659.DA5281-05	1	406
659.DB5041-00		337
659.DB5081-00		337
659.DB5121-01	1	403
659.DB5141-02	1	403
659.DB5141-04		403
659.DB5181-03		403
659.DB5181-05		403
659.DB5221-01		406
659.DB5241-02		406
659.DB5241-04		406
659.DB5281-03		406
659.DB5281-05		406
659.MA5041-00		337
659.MA5121-01		404

● = IMQ or other quality marks ✔ = new product ✦ = make to order

659

Cat.numb.	Pack qty.	Page
659.MA5141-02		404
659.MA5141-04		404
659.MA5221-01		406
659.MA5241-02		406
659.MA5241-04		406
659.MB5041-00		337
659.MB5121-01		404
659.MB5141-02		404
659.MB5141-04		404
659.MB5221-01		406
659.MB5241-02		406
659.MB5241-04		406
659.SC5041-00		338
659.SC5121-01		404
659.SC5141-02		404
659.SC5141-04		404
659.SC5221-01		407
659.SC5241-02		407
659.SC5241-04		407
659.SC5243-07		407
659.SC5263-06		407
659.SC5263-09		407
659.SCBASE		338
659.SCFIRE-E		340
659.SCFIRE-M		340
659.SK5041-00		339
659.SK5121-01		405
659.SK5123-12		405
659.SK5141-02		405
659.SK5141-04		405
659.SK5143-07		405
659.SK5163-06		405
659.SK5221-01		407
659.SK5241-02		407
659.SK5241-04		407
659.SK5243-08		407
659.SKBASE		339
659.SKFIRE-E		340
659.SKFIRE-M		340
659.SX5040-00		340
659.SX5140-02		405

661

Cat.numb.	Pack qty.	Page
✦ 661.0160-057	1	383
✦ 661.0160-065	1	383
✦ 661.0160-068	1	383
✦ 661.0160-075	1	383
✦ 661.5160-053		383
✦ 661.5160-160		383
✦ 661.5250-008		383

670

Cat.numb.	Pack qty.	Page
670.3026-75	1	385
670.3026-77	1	385
670.3526-77	1	385
670.3536-59	1	386

670

Cat.numb.	Pack qty.	Page
670.3536-62	1	386
670.6046-03	1	385
670.6046-08	1	385
670.6046-12	1	385
670.6546-03	1	385
670.6546-12	1	385
670.6566-117	1	386
670.6566-126	1	386
670.6566-137	1	386
670.9566-456	1	414
670.9566-457	1	414
670.9566-458	1	414
670.9566-459	1	414
670.9566-464	1	414
670.9566-465	1	414
670.9566-466	1	414
670.9566-467	1	414

671

Cat.numb.	Pack qty.	Page
671.2012-001	1	384
671.2012-002	1	384
671.2012-003	1	384
671.2012-004	1	384
671.2012-005	1	384
671.2012-006	1	384
671.2012-009	1	384
671.2016-008	1	384
671.2912-001	1	384
671.2912-002	1	384
671.2912-003	1	384
671.2912-004	1	384
671.3020-75	1	385
671.3020-77	1	385
671.3025-75	1	386
671.3030-59	1	387
671.3030-97	1	387
671.3035-59	1	387
671.3035-97	1	387
671.3530-59	1	387
671.3530-97	1	387
671.3535-59	1	387
671.3535-97	1	387
671.6040-03	1	385
671.6040-07	1	385
671.6040-95	1	385
671.6045-03	1	386
671.6045-06	1	386
671.6045-07	1	386
671.6045-08	1	386
671.6045-95	1	386
671.6065-117	1	387
671.6545-03	1	386
671.6545-95	1	386
671.6560-117	1	387
671.6565-117	1	387

672

Cat.numb.	Pack qty.	Page
672.1100	1/6	280
✦ 672.1101	6	280
672.1200	1/6	282
672.1300	1/6	286
672.1301	6	286
672.2002	1/24	276
672.2004	1/16	277
672.2008	1/10	277
672.2008.1101	1/10	277
672.2012	1/9	277
672.2012.1101	1/9	277
672.2016	1/6	277
672.2016.1101	1/6	277
672.2100	1/10	281
672.2200	1/10	283
672.2300	1/10	286
672.2301	1/10	286
672.3100	1/6	281
✔ 672.3100.1102	6	281
672.3200	1/6	283
672.3300	1/6	287
672.3302	1/6	287
672.4024	1/6	278
672.4024.1102	1/6	278
672.4032	1/4	278
672.4032.1102	1/4	278
672.4116	1/4	281
672.4216	1/4	283
672.4316	1/4	287
672.5048	1/3	278
672.5048.1102	1/3	278
672.5116	1/3	282
672.5122	3	282
✔ 672.5122.1102	3	282
672.5316	1/3	285
672.5416	1/3	284
672.5522	3	285
672.5616	1/3	287
672.5622	3	284
672.5822	3	287
✔ 672.5822.1102	3	287
672.7064	1	279
✦ 672.7064.1102	1	279

673

Cat.numb.	Pack qty.	Page
673.2008	1/12	290
✔ 673.2008.1102	1/12	290
673.2008B	1/12	290
✦ 673.2008B.2010	1/12	290
673.2008B.2012	1/10	290
673.2012	1/7	290
✔ 673.2012.1102	6	290
673.2012B	1/7	290
673.2012B.2010	1/7	290
✦ 673.2012B.2012	1/6	290
673.2018	1/6	290
673.2018B	1/6	290
✦ 673.2018B.2010	1/6	290
✦ 673.2018B.2012	1	290

673

Cat.numb.	Pack qty.	Page
673.2102	1/36	289
673.2102B	1/36	289
673.2104	1/24	289
673.2104B	1/24	289
673.2108	1/12	289
673.2108B	1/12	289
✦ 673.2108B.0012	1/10	289
673.2112	1/7	289
673.2112B	1/7	289
✦ 673.2112B.0012	1/6	289
673.2118	1/6	289
✔ 673.2118.0011	1/6	289
673.2118B	1/6	289
✦ 673.2118B.0012	1	289
673.4024	1/5	290
673.4024B	1/5	290
673.4024B.2010	1/5	290
673.4024B.2012	1	290
673.4036	1/4	290
673.4036B	1/4	290
673.4036B.2010	1/4	290
673.4036B.2012	1	290
673.4124	1/5	289
673.4124B	1/5	289
✦ 673.4124B.0012	1	289
673.4136	1/4	289
✦ 673.4136B	1/4	289
✦ 673.4136B.0012	1	289
673.5054	1/2	290
673.5054B	1/2	290
673.5054B.2010	1/2	290
✦ 673.5054B.2012	1	290
673.5154	1/2	289
✦ 673.5154B	1/2	289
✦ 673.5154B.0012	1	289

674

Cat.numb.	Pack qty.	Page
674.1000	1/6	288
✦ 674.1001	6	288
674.1100	1/6	288
✦ 674.1101	6	288
674.1200	1/6	288
674.1300	1/6	288
✦ 674.1301	6	288

675

Cat.numb.	Pack qty.	Page
675.2008	1/10	291
✔ 675.2008.1102	1/10	291
675.2008B	1/10	291
675.2008B.2010	1/10	291
675.2008B.2012	1/6	291
675.2012	1/7	291
✔ 675.2012.1102	1/7	291
675.2012B	1/7	291
675.2012B.2010	1/7	291
675.2012B.2012	1/4	291

● = IMQ or other quality marks ✔ = new product ✦ = make to order

Index by product number

675		
Cat.numb.	Pack qty.	Page
675.2018	1/7	291
675.2018B	1/7	291
675.2018B.2010	1/7	291
675.2018B.2012	1	291
675.2104	1/38	291
675.2104B	1/38	291
675.4024	1/5	291
675.4024B	1/5	291
675.4024B.2010	1/5	291
675.4024B.2012	1	291
675.4036	1/3	291
675.4036B	1/3	291
675.4036B.2010	1/3	291
675.4036B.2012	1	291
675.5054	1/2	291
675.5054B	1/2	291
675.5054B.2010	1/2	291
675.5054B.2012	1	291

676		
Cat.numb.	Pack qty.	Page
676.10101	10	346
676.10102	10	346
676.10103	20	346
676.25100	1/13	345
676.35100	1/14	345
676.35201	1/6	345
676.35205	1/6	346

677		
Cat.numb.	Pack qty.	Page
677.1012.1	1	306
677.1012.1-HW	1	306
677.2024.1	1	306
677.2024.1-HW	1	306
677.3036.2	1	306
677.3036.2-HW	1	306
677.4048.2	1	306
677.4048.2-HW	1	306
677.5060.2	1	306
677.5060.2-HW	1	306

680		
Cat.numb.	Pack qty.	Page
680.001	4/100	347
680.002	4/100	347
680.003	4/60	347

685		
Cat.numb.	Pack qty.	Page
685.004	1/48	347
685.005	1/54	347
685.006	1/40	347
685.007	1/24	347
685.008	1/12	347

685		
Cat.numb.	Pack qty.	Page
685.009	1/6	347
685.010	1/4	347
685.011	1	347

686		
Cat.numb.	Pack qty.	Page
686.204	1/40	348
686.205	1/42	348
686.206	1/48	348
686.207	1/30	348
686.208	1/16	348
686.209	1/8	348
686.210	1/4	348
686.211	1	348
686.224	1/40	348
686.225	1/42	348
686.226	1/48	348
686.227	1/30	348
686.228	1/16	348
686.229	1/8	348
686.230	1/4	348
686.231	1	348
686.404	1/24	348
686.408	1/6	348
686.409	1/6	348
686.410	1/3	348
686.411	1	348
686.424	1/24	348
686.428	1/6	348
686.429	1/6	348
686.430	1/3	348
686.431	1	348
686.AMR209-01		154
686.AMRTA-005		153
686.AMRTA-032		153
686.AMRTA-063		153
686.AMRTA-125		153
686.AMRTA-225		153

687		
Cat.numb.	Pack qty.	Page
687.001	4/100	351
687.002	4/100	351
687.003	4/60	351
687.004	1/48	352
687.005	1/54	352
687.006	1/40	352
687.204	1/40	353
687.205	1/42	353
687.206	1/48	353

688		
Cat.numb.	Pack qty.	Page
688.001	4/100	351
688.002	4/100	351
688.003	4/60	351

688		
Cat.numb.	Pack qty.	Page
688.003.R	4/60	351
688.004	1/48	352
688.004.R	1/48	352
688.005	1/54	352
688.005.R	1/54	352
688.006	1/40	352
688.204	1/40	353
688.204.R	1/40	353
688.205	1/42	353
688.205.R	1/42	353
688.206	1/48	353
688.206.R	48	353

689		
Cat.numb.	Pack qty.	Page
689.001	4/100	354
689.002	4/100	354
689.003	4/60	354
689.004	48	354
689.005	54	354
689.006	40	354
689.204	40	354
689.205	42	354
689.206	48	354

690		
Cat.numb.	Pack qty.	Page
690.4200-00	1	342
690.4200-295	1	409
690.4200-300	1	409
690.4200-301	1	409

692		
Cat.numb.	Pack qty.	Page
692.4200-00	1	342
692.4201-00	1	341
692.4202-00	1	341
692.4203-00	1	342
692.4204-00	1	342
692.4205-00	1	342
692.4206-00	1	342
692.4300-00	1	343
692.4300-305	1	408
692.4300-69	1	408
692.4300-70	1	408
692.4330	1	343
692.4340	1	318
692.4342	1/5	318

707		
Cat.numb.	Pack qty.	Page
707.1105	1/12	576
707.1205	1/12	577
707.1210	1/12	577
707.1215	1/12	577

707		
Cat.numb.	Pack qty.	Page
707.2110	1/12	576
707.2115	1/12	576
707.2220	1/12	577

709		
Cat.numb.	Pack qty.	Page
709.2405	1/12	575
709.2505	1/12	575
709.2605	1/12	575
709.3310	1/6	575
709.3410	1/6	575
709.3415	1/6	575
709.3510	1/6	575
709.3610	1/6	575
709.3705	1/6	575
709.3710	1/6	575
709.3810	1/6	575
709.3910	1/6	575
709.4320	1/6	575
709.4420	1/6	575
709.4615	1/6	575
709.4620	1/6	575
709.4715	1/6	575
709.4720	1/6	575
709.4820	1/6	575
709.4920	1/6	575

745		
Cat.numb.	Pack qty.	Page
745.0000-000	1	457
745.3005-003	1	453
745.3005-006	1	453
745.3005-008	1	453
745.3005-012	1	453
745.3005-013	1	453
745.3005-094	1	453
745.3005-096	1	453
745.3005-441	1	453
745.3505-003	1	453
745.3505-006	1	453
745.3505-008	1	453
745.3505-012	1	453
745.3505-012.P	1	457
745.3505-013	1	453
745.3505-094	1	453
745.3505-096	1	453
745.3505-441	1	453
745.5005-003	1	453
745.5005-006	1	453
745.5005-008	1	453
745.5005-012	1	453
745.5005-013	1	453
745.5005-094	1	453
745.5005-096	1	453
745.5505-003	1	453
745.5505-006	1	453
745.5505-006.P	1	457
745.5505-008	1	453

● = IMQ or other quality marks ✔ = new product ✦ = make to order

745		
Cat.numb.	Pack qty.	Page
745.5505-012	1	453
✔ 745.5505-012.P	1	457
745.5505-013	1	453
745.5505-094	1	453
745.5505-096	1	453

746		
Cat.numb.	Pack qty.	Page
✔ 746.0000-000	1	456
746.2010-052	1	449
✔ 746.2010-052.P	1	456
746.2010-075	1	449
✦ 746.2010-093	1	449
✦ 746.2010-101	1	449
746.2010-102	1	449
✦ 746.2010-390	1	449
✦ 746.2025-352	1	451
746.2510-075	1	449
✦ 746.2510-093	1	449
✦ 746.2512-352	1	449
✦ 746.2525-352	1	451
746.3000-010	1	447
✔ 746.3000-010.P	1	456
✦ 746.3000-349	1	447
746.3000-384	1	447
746.3000-385	1	447
✔ 746.3000-385.P	1	456
✦ 746.3000-388	1	447
✦ 746.3000-389	1	447
✦ 746.3005-894	1	447
✦ 746.3005-895	1	447
746.3010-054	1	449
✔ 746.3010-054.P	1	456
746.3010-056	1	449
✔ 746.3010-056.P	1	456
746.3010-077	1	449
✔ 746.3010-077.P	1	456
746.3010-091	1	449
✦ 746.3025-350	1	451
✦ 746.3025-351	1	451
746.3510-077	1	449
✔ 746.3510-077.P	1	456
746.3510-091	1	449
✔ 746.3510-091.P	1	456
746.3512-350	1	449
✦ 746.3512-351	1	449
✦ 746.3525-350	1	451
✦ 746.3525-351	1	451
746.4000-010	1	447
✔ 746.4000-010.P	1	456
✦ 746.4000-349	1	447
746.4000-384	1	447
746.4000-385	1	447
✔ 746.4000-385.P	1	456
✦ 746.4000-388	1	447
✦ 746.4000-389	1	447
✦ 746.4005-895	1	447
✦ 746.4005-896	1	447
✦ 746.4005-897	1	447
✦ 746.4005-898	1	447

749		
Cat.numb.	Pack qty.	Page
749.3005-350	1	455
749.3005-351	1	455
749.3005-352	1	455
749.3005-353	1	455
749.3005-354	1	455
749.3505-350	1	455
749.3505-351	1	455
749.3505-352	1	455
749.3505-353	1	455
749.3505-354	1	455
749.5005-350	1	455
749.5005-351	1	455
749.5005-352	1	455
749.5505-350	1	455
749.5505-351	1	455
749.5505-352	1	455

751		
Cat.numb.	Pack qty.	Page
751.0210-D	1	442
751.0215-D	1	442
751.0225-D	1	442
751.0310-D	1	442
751.0315-D	1	442
751.0325-D	1	442
751.1315-D	1	442
751.7210-D	1	443
751.9210	1	443

756		
Cat.numb.	Pack qty.	Page
756.9211	1	445

770		
Cat.numb.	Pack qty.	Page
770.200	1/24	370
770.207	1/24	370
770.208	1/18	370
✦ 770.250	1/24	370
770.400	1/6	371
✦ 770.405	1/6	371
770.406	1/6	371
770.407	1/6	371
770.408	1/6	371
✦ 770.409	1/6	371
770.410	1/6	371

780		
Cat.numb.	Pack qty.	Page
✦ 780.2262	12	364
780.2762	12	364

781		
Cat.numb.	Pack qty.	Page
✦ 781.2260	1/12	364
✦ 781.2261	1/12	364
781.2760	1/12	364
781.2761	1/12	364
✦ 781.2761/1	1	365
✦ 781.2761/2	1	365
✦ 781.2761/3	1	365

786		
Cat.numb.	Pack qty.	Page
786.0100	1/12	366
786.0200	1/12	367
786.0210	1/12	367
✦ 786.0220	1/12	367
✦ 786.2260	1/12	364
✦ 786.2261	1/12	364
786.2760	1/12	364
786.2761	1/12	364

790		
Cat.numb.	Pack qty.	Page
790.101	1/6	369
✦ 790.102	1/6	369
✦ 790.301	1/6	369
✦ 790.302	1/6	369

791		
Cat.numb.	Pack qty.	Page
✦ 791.12210	1/6	368
791.12710	1/6	368
✦ 791.22210	1/6	368
✦ 791.22710	1/6	368
✦ 791.32210	1/6	369
791.32710	1/6	369

796		
Cat.numb.	Pack qty.	Page
✦ 796.12210	1/6	368
796.12710	1/6	368
✦ 796.22210	1/6	368
796.22710	1/6	368
✦ 796.32210	1/6	369
796.32710	1/6	369

805		
Cat.numb.	Pack qty.	Page
805.3304	100/1000	469
805.3305	100/1000	469
805.3306	50/500	469
805.3307	25/200	469
805.3314	100/1000	469
✦ 805.3314HF	100/1000	469
✦ 805.3315	100/1000	469

805		
Cat.numb.	Pack qty.	Page
✦ 805.3315HF	100/1000	469
✦ 805.3324	100/1000	469
✦ 805.3324HF	100/1000	469
✦ 805.3325	100/1000	469
✦ 805.3325HF	100/1000	469
✦ 805.3334	10/50	468
805.3335	10/50	468
805.3336	10/50	468
805.3337	5/25	468
805.3340	50/600	464
✦ 805.3340.0	50/600	465
805.3340.1	50/600	465
✦ 805.3340.2	50/600	465
805.3341	50/600	464
805.3341.0	50/600	465
805.3341.1	50/600	465
✦ 805.3341.2	50/600	465
805.3342	25/500	464
805.3342.0	25/500	465
✦ 805.3342.1	25/500	465
✦ 805.3342.2	25/500	465
805.3343	25/600	464
✦ 805.3343.0	25/500	465
805.3343.1	25/500	465
✦ 805.3343.2	25/500	465
805.3344	25/300	464
805.3344.0	25/300	465
✦ 805.3344.1	25/300	465
805.3344.2	25/300	465
805.3345	25/400	464
805.3345.0	25/400	465
✦ 805.3345.1	25/400	465
✦ 805.3345.2	25/400	465
805.3346	25/350	464
805.3346.0	25/350	465
805.3346.1	25/350	465
✦ 805.3346.2	25/350	465
805.3347	10/140	464
✦ 805.3347.0	10/140	465
✦ 805.3347.1	10/140	465
✦ 805.3347.2	10/140	465
805.3348	10/100	464
✦ 805.3348.0	10/100	465
✦ 805.3348.1	10/100	465
✦ 805.3348.2	10/100	465
805.3349	10/100	464
✦ 805.3349.0	10/100	465
✦ 805.3349.1	10/100	465
✦ 805.3349.2	10/100	465
805.3350	50/600	466
805.3351	50/600	466
805.3352	25/500	466
805.3353	25/500	466
805.3354	25/300	466
805.3355	25/400	466
805.3356	25/350	466
805.3357	10/140	466
805.3358	10/100	466
805.3359	10/100	466
805.3360	100/1000	467
805.3361	100/1000	467
805.3362	100/1000	467

Index by product number

805			
Cat.numb.		Pack qty.	Page
805.3363		100/1000	467
805.3364		100/1000	467
805.3365		100/1000	467
805.3366		50/500	467
805.3367		50/500	467
805.3368		50/500	467
805.3369		50/500	467
805.3370	✦	100/1000	467
805.3371	✦	100/1000	467
805.3372	✦	100/1000	467
805.3373	✦	100/1000	467
805.3374	✦	100/1000	467
805.3375	✦	100/1000	467
805.3376	✦	50/500	467
805.3377	✦	50/500	467
805.3378	✦	50/500	467
805.3379	✦	50/500	467
805.3380		100/1000	467
805.3381		100/1000	467
805.3382		100/1000	467
805.3383		100/1000	467
805.3384		100/1000	467
805.3385		100/1000	467
805.3386		50/500	467
805.3387		25/250	467
805.3388		25/250	467
805.3389		25/250	467
805.3390		100/1000	467
805.3391		100/1000	467
805.3392		100/1000	467
805.3393		100/1000	467
805.3394		100/1000	467
805.3395		100/1000	467
805.3396		50/500	467
805.3397		50/500	467
805.3398		50/500	467
805.3399		50/500	467
805.5020		100/1000	95
805.5025		100/1000	95
805.5032		100/1000	95
805.5225		10/50	468
805.5240		5/25	468
805.5325		10/50	468
805.5340		5/25	468
805.5412	●	50/600	464
805.5412.0	● ✦	50/600	465
805.5412.1	● ✦	50/600	465
805.5412.2	● ✦	50/600	465
805.5416	●	50/600	464
805.5416.0	●	50/600	465
805.5416.1	● ✦	50/600	465
805.5416.2	●	50/600	465
805.5420	●	25/500	464
805.5420.0	●	25/500	465
805.5420.1	●	25/500	465
805.5420.2	● ✦	25/500	465
805.5425	●	25/400	464
805.5425.0	●	25/400	465
805.5425.1	●	25/400	465
805.5425.2	● ✦	25/400	465
805.5432	●	25/350	464
805.5432.0	● ✦	25/350	465

805			
Cat.numb.		Pack qty.	Page
805.5432.1	● ✦	25/350	465
805.5432.2	● ✦	25/350	465
805.5440	●	10/140	464
805.5440.0	● ✦	10/140	465
805.5440.1	● ✦	10/140	465
805.5440.2	● ✦	10/140	465
805.5450	●	10/100	464
805.5450.0	● ✦	10/100	465
805.5450.1	● ✦	10/100	465
805.5450.2	● ✦	10/100	465
805.5463	●	10/100	464
805.5463.0	● ✦	10/100	465
805.5463.1	● ✦	10/100	465
805.5463.2	● ✦	10/100	465
805.5512	● ✦	50/600	466
805.5516	●	50/600	466
805.5520	●	25/500	466
805.5525	●	25/400	466
805.5532	●	25/350	466
805.5540	● ✦	10/140	466
805.5550	● ✦	10/100	466
805.5563	● ✦	10/100	466
805.5612	✦	100/1000	467
805.5616		100/1000	467
805.5620		100/1000	467
805.5625		100/1000	467
805.5632		50/500	467
805.5640		50/500	467
805.5650		50/500	467
805.5663		50/500	467
805.5712	✦	100/1000	467
805.5716	✦	100/1000	467
805.5720	✦	100/1000	467
805.5725	✦	100/1000	467
805.5732	✦	50/500	467
805.5740	✦	50/500	467
805.5750	✦	50/500	467
805.5763	✦	50/500	467
805.5812	✦	100/1000	467
805.5816	✦	100/1000	467
805.5820	✦	100/1000	467
805.5825		100/1000	467
805.5832	✦	50/500	467
805.5840		25/250	467
805.5850		25/250	467
805.5863		25/250	467
805.5912	✦	100/1000	467
805.5916		100/1000	467
805.5920		100/1000	467
805.5925	✦	100/1000	467
805.5932	✦	100/1000	467
805.5940	✦	50/500	467
805.5950	✦	50/500	467
805.5963	✦	50/500	467
805.7340	● ✦	50/600	464
805.7341	● ✦	50/600	464
805.7343	● ✦	25/500	464
805.7344	● ✦	25/300	464
805.7345	● ✦	25/400	464
805.7346	● ✦	25/350	464
805.7347	● ✦	10/140	464
805.7348	● ✦	10/140	464

805			
Cat.numb.		Pack qty.	Page
805.7349	● ✦	10/100	464
805.7350	● ✦	50/600	466
805.7351	●	50/600	466
805.7353	● ✦	25/500	466
805.7354	● ✦	25/300	466
805.7355	● ✦	25/400	466
805.7356	● ✦	25/350	466
805.7357	● ✦	10/140	466
805.7358	●	10/140	466
805.7359	● ✦	10/100	466

810			
Cat.numb.		Pack qty.	Page
810.372/AS	● ✦	100/600	487
810.372/B	● ✦	100/600	486
810.372/G	● ✦	100/600	486
810.372/M	● ✦	100/600	486
810.372/N	● ✦	100/600	486
810.372/TR	●	600/6000	486
810.372/V	● ✦	100/600	486
810.374/AS	●	1000/4000	487
810.374/B	● ✦	100/1000	486
810.374/G	●	100/1000	486
810.374/M	● ✦	100/1000	486
810.374/N	● ✦	100/1000	486
810.374/TR	●	1000/4000	486
810.374/V	● ✦	100/1000	486
810.375/AS	●	100/1000	487
810.375/B	● ✦	100/1000	486
810.375/G	● ✦	100/1000	486
810.375/M	● ✦	100/1000	486
810.375/N	● ✦	100/1000	486
810.375/TR	●	100/1000	486
810.375/V	● ✦	100/1000	486
810.376/AS	●	100/1000	487
810.376/B	● ✦	100/1000	486
810.376/G	● ✦	100/1000	486
810.376/M	● ✦	100/1000	486
810.376/N	● ✦	100/1000	486
810.376/TR	●	100/1000	486
810.376/V	● ✦	100/1000	486
810.378/AS	●	100/1000	487
810.378/B	● ✦	100/1000	486
810.378/G	● ✦	100/1000	486
810.378/M	● ✦	100/1000	486
810.378/N	● ✦	100/1000	486
810.378/TR	●	100/1000	486
810.378/V	● ✦	100/1000	486
810.379/AS	● ✦	50/500	487
810.379/B	● ✦	50/500	486
810.379/G	● ✦	50/500	486
810.379/M	● ✦	50/500	486
810.379/N	● ✦	50/500	486
810.379/TR	●	50/500	486
810.379/V	● ✦	50/500	486
810.425/TR	●	10/100	486
810.435/TR	●	5/250	486

812			
Cat.numb.		Pack qty.	Page
812.372	●	10/200	488
812.374	●	10/400	488
812.375	●	10/400	488
812.376	●	10/200	488
812.378	●	10/150	488
812.379	●	10/60	488

815			
Cat.numb.		Pack qty.	Page
815.1361	●	50/800	494
815.1362	●	50/400	494
815.13625	●	50/400	494
815.1363	●	25/300	494
815.1364	●	25/150	494
815.1365	●	15/60	494
815.1366	●	10/40	494
815.2361	●	50/800	493
815.2361B	●	50/800	493
815.2362	●	50/400	493
815.23625	●	50/400	493
815.23625B	●	50/400	493
815.2362B	●	50/400	493
815.2363	●	25/300	493
815.2363B	●	25/300	493
815.2364	●	25/150	493
815.2364B	●	25/150	493
815.2365	●	15/60	493
815.2365B	●	15/60	493
815.2366	●	10/40	493
815.2366B	●	10/40	493

817			
Cat.numb.		Pack qty.	Page
817.001		10/500	492
817.0602	●	25/650	489
817.0603	●	25/400	490
817.0605	●	10/270	490
817.1602	●	10/270	489
817.1603	●	10/270	490
817.1605	●	10/260	490
817.1606C	●	10/260	491
817.3502	●	10/160	489
817.3503	●	10/260	490
817.3506C	●	10/120	491

818			
Cat.numb.		Pack qty.	Page
818.2		100/1000	480

820			
Cat.numb.		Pack qty.	Page
820.610		100/1000	502
820.612		100/1000	502
820.614	✦	100/1000	502
820.616		100/1000	502

● = IMQ or other quality marks ✔ = new product ✦ = make to order

820

Cat.numb.	Pack qty.	Page
820.620	100/1000	502
820.622	100/1000	502
820.625	100/1000	502
820.628	100/1000	502
820.632	100/1000	502
820.640	100/1000	502
820.650	50/400	502
820.710	200/1000	502
820.710/P	100/1000	502
820.712	200/1000	502
820.712/P	100/1000	502
820.714	200/1000	502
820.714/P	100/1000	502
820.716	100/1000	502
820.716/P	100/1000	502
820.720	100/1000	502
820.720/P	100/1000	502
820.722	100/1000	502
820.722/P	100/1000	502
820.725	100/1000	502
820.725/P	100/1000	502
820.732/P	100/1000	502
820.740/P	100/500	502
820.750/P	50/500	502
820.810	100/1000	502
820.813	100/1000	502
820.816	100/1000	502
820.819	100/1000	502
820.822	100/1000	502
820.826	100/1000	502
820.828	100/1000	502
820.832	100/1000	502
820.838	100/1000	502
820.850	50/500	502

830

Cat.numb.	Pack qty.	Page
830.30/10	100/5000	480
830.30/10G	100/5000	480
830.30/12	100/3000	480
830.30/12G	100/3000	480
830.30/14G	100/3000	480
830.30/16G	100/5000	480
830.30/19G	100/3000	480
830.30/22G	100/1000	480
830.30/26G	100/1000	480
830.30/28G	100/1000	480
830.30/3-4	100/5000	480
830.30/3-4G	100/5000	480
830.30/32G	100/1000	480
830.30/5	100/5000	480
830.30/5G	100/5000	480
830.30/6	100/5000	480
830.30/6G	100/5000	480
830.30/7	100/5000	480
830.30/7G	100/5000	480
830.30/8	100/5000	480
830.30/8G	100/5000	480
830.30/P11	100/1000	479
830.30/P11G	100/1000	479

830

Cat.numb.	Pack qty.	Page
830.30/P13	100/1000	479
830.30/P13G	100/1000	479
830.30/P3	100/5000	479
830.30/P3G	100/5000	479
830.30/P5	100/3000	479
830.30/P5G	100/3000	479
830.30/P6	100/5000	479
830.30/P6G	100/5000	479
830.30/P8	100/3000	479
830.30/P8G	100/3000	479

839

Cat.numb.	Pack qty.	Page
839.39/100	100/1000	473
839.39/101	100/1000	474
839.39/102	100/1000	474
839.39/103	100/1000	474
839.39/104	20	472
839.39/6115	100/2000	471
839.39/6175	100/2000	471
839.39/9120	100/2000	471
839.39/9180	100/2000	471
839.39/9260	100/2000	471
839.39/9350	100/2000	471
839.42080	100/2000	470
839.42100	100/2000	470
839.42120	100/2000	470
839.42160	100/2000	470
839.42200	100/2000	470
839.43140	100/2000	470
839.43200	100/2000	470
839.43300	100/2000	470
839.43370	100/2000	470
839.44190	100/2000	470
839.44200	100/2000	470
839.44250	100/2000	470
839.44300	100/2000	470
839.44370	100/2000	470
839.44430	100/2000	470
839.47200	100/2000	470
839.47290	100/2000	470
839.47370	100/2000	470
839.47780	100/1000	470
839.52080	100/2000	470
839.52100	100/2000	470
839.52120	100/2000	470
839.52160	100/2000	470
839.52200	100/2000	470
839.53140	100/2000	470
839.53200	100/2000	470
839.53300	100/2000	470
839.53370	100/2000	470
839.54190	100/2000	470
839.54200	100/2000	470
839.54250	100/2000	470
839.54300	100/2000	470
839.54370	100/2000	470
839.54430	100/2000	470
839.57200	100/2000	470
839.57290	100/2000	470

839

Cat.numb.	Pack qty.	Page
839.57370	100/2000	470
839.57780	100/1000	470

845

Cat.numb.	Pack qty.	Page
845.46	50/500	475
845.46/1	50/1000	475
845.46/2	50/500	475

846

Cat.numb.	Pack qty.	Page
846.13-10	100/2000	476
846.13-4	100/2000	476
846.13-5	100/2000	476
846.13-6	100/2000	476
846.13-7	100/2000	476
846.13-8	100/2000	476
846.14-10	100/2000	476
846.14-4	100/2000	476
846.14-5	100/2000	476
846.14-6	100/2000	476
846.14-7	100/2000	476
846.14-8	100/2000	476

860

Cat.numb.	Pack qty.	Page
860.01620	100/1200	501
860.02532	50/600	501
860.04050	40/320	501
860.1116/G	50/800	503
860.1120/G	50/600	503
860.1125/G	50/400	503
860.1132/G	25/200	503
860.1216/G	50/800	503
860.1220/G	50/400	503
860.1225/G	25/300	503
860.1232/G	20/160	503
860.1316/G	100/1000	500
860.1320/G	100/1000	500
860.1325/G	100/800	500
860.1332/G	100/800	500
860.1340/G	50/400	500
860.1350/G	25/250	500
860.1516	100/1000	500
860.1520	100/1000	500
860.1525	100/800	500
860.1532	50/500	500
860.1540	50/400	500
860.1550	25/250	500
860.1616	100/1000	501
860.1640	100/500	501
860.2016	100/1000	501
860.2020	100/1000	501
860.2025	100/800	501
860.2032	50/400	501

862

Cat.numb.	Pack qty.	Page
862.1016/G	100/1200	503
862.1020/G	100/800	503
862.1025/G	50/600	503
862.1032/G	25/300	503
862.1040/G	20/160	503
862.1050/G	20/120	503
862.1916	100/2000	503
862.1920	100/1200	503
862.1925	50/700	503
862.1932	25/400	503
862.1940	300	503
862.1950	150	503
862.916/G	50/800	503
862.920/G	50/400	503
862.925/G	25/200	503
862.932/G	25/150	503
862.940/G	15/60	503
862.950/G	10/40	503

864

Cat.numb.	Pack qty.	Page
864.0601	50/1200	506
864.0603	50/1200	506
864.0605	50/800	506
864.0606	50/800	506
864.0607	50/400	506
864.0609	25/300	506
864.0611	20/160	506
864.0653	50/1200	506
864.0655	50/800	506
864.0657	50/400	506
864.0659	25/300	506
864.0661	25/200	506
864.0663	15/120	506
864.0665	10/80	506
864.2016	50	504
864.2020	50	504
864.2025	50	504
864.2032	25	504
864.2040	25	504
864.2050	15	504
864.216	50/600	504
864.220	50/400	504
864.225	25/200	504
864.232	25/100	504
864.240	15/60	504
864.250	10/40	504
864.316	50/800	504
864.320	50/600	504
864.325	50/400	504
864.332	25/200	504
864.340	20/160	504
864.350	10/80	504
864.516	50/800	504
864.520	50/600	504
864.525	50/400	504
864.532	25/300	504
864.540	25/200	504
864.550	15/120	504
864.601	50/1200	506

Index by product number

864			
Cat.numb.		Pack qty.	Page
864.603		50/1200	506
864.605		50/800	506
864.606		50/800	506
864.607		50/400	506
864.609		25/300	506
864.611		25/200	506
864.651	✦	50/1200	506
864.653		50/1200	506
864.655		50/800	506
864.657		50/400	506
864.659		25/300	506
864.661		25/200	506
864.663		15/120	506
864.665		10/80	506
864.7016	✦	50/800	505
864.7020	✦	50/600	505
864.7025	✦	50/400	505
864.7032	✦	25/200	505
864.7040	✦	20/160	505
864.7050	✦	15/120	505
864.716		50/800	505
864.720		50/600	505
864.725		50/400	505
864.732		25/200	505
864.740		20/160	505
864.750		15/120	505
864.8016	✦	50/600	505
864.8020	✦	50/400	505
864.8025	✦	25/200	505
864.8032	✦	20/160	505
864.8040	✦	15/120	505
864.8050	✦	10/80	505
864.816		50/600	505
864.820		50/400	505
864.825		25/200	505
864.832		20/160	505
864.840		15/120	505
864.850		10/80	505
864.9016	✦	50	504
864.9020	✦	50	504
864.9025	✦	50	504
864.9032	✦	25	504
864.9040	✦	25	504
864.9050	✦	15	504

865			
Cat.numb.		Pack qty.	Page
865.002		200/1600	477
865.003		200/1000	477
865.004		200/1000	477
865.005		200/1000	477
865.006		200/600	477
865.007		200/600	477
865.008		200/400	477
865.009		200/600	477
865.010		200/400	477
865.012		100/200	477
865.014		100/200	477
865.016		100/200	477
865.018		100/200	477

865			
Cat.numb.		Pack qty.	Page
865.020		50/150	477
865.022		50/150	477
865.024		50/100	477
865.026		50/100	477
865.028		50/150	477
865.030		50/100	477
865.036		25/100	477
865.040		25/50	477
865.106		200/800	477
865.200		50/500	483
865.210	✦	20	481
865.211	✦	20	481
865.220		40	482
865.221		40	482
865.230		20	481
865.231		20	481
865.240	✦	100	482
865.241	✦	100	482
865.603		25/700	478
865.604		25/600	478
865.606		25/500	478
865.608		25/400	478
865.610		25/200	478
865.612		20/160	478
865.614		20/120	478

866			
Cat.numb.		Pack qty.	Page
866.216		10/200	507
866.220		10/200	507
866.225		10/160	507
866.232		10/100	507
866.240		5/50	507
866.250		5/30	507
866.316		10/200	507
866.320		10/200	507
866.325		10/160	507
866.332		10/100	507
866.340		5/50	507
866.350		5/30	507
866.516		10/240	507
866.520		10/240	507
866.525		10/200	507
866.532		10/100	507
866.540		5/60	507
866.550		5/40	507
866.816		10/240	507
866.820		10/240	507
866.825		10/200	507
866.832		10/100	507
866.840		5/60	507
866.850		5/40	507

871			
Cat.numb.		Pack qty.	Page
871.060		24	531
871.080		16	531
871.110		8	531

871			
Cat.numb.		Pack qty.	Page
871.AE060		12	532
871.AE080		9	532
871.AE110		6	532
871.AEV060		8	532
871.AEV080		6	532
871.AI060		8	532
871.AI080		6	532
871.AI110		4	532
871.AIV060		6	532
871.AIV080		4	532
871.AP060		10	532
871.AP080		8	532
871.AP110		6	532
871.APV060		8	532
871.APV080		6	532
871.AV101		1	535
871.AV201		1	535
871.AV202		1	535
871.AVD060		6	532
871.AVD080		4	532
871.AVS060		6	532
871.AVS080		4	532
871.CM060		9	532
871.CM080		6	532
871.CM110		4	532
871.GF060		6	532
871.GF080		4	532
871.GT080		4	532
871.GT110		2	532
871.GU060		30	532
871.GU080		30	532
871.GU110		20	532
871.GY16		20	534
871.MP100		1	535
871.MP140		1	535
871.PA85		15	534
871.PK85		5	534
871.RD060		12	534
871.RD080		8	534
871.SP001		24	534
871.SP035		2	534
871.SP045		2	534
871.SP100		4	534
871.TF060		30	533
871.TF080		30	533
871.TF110		20	533
871.TM060		10	533
871.TM080		8	533
871.TM110		8	533
871.TT060		12	533
871.TT080		9	533

872			
Cat.numb.		Pack qty.	Page
872.04040		60	525
872.06040		40	525
872.06060		32	525
872.08060		24	525
872.10060		18	525
872.10080		16	525

872			
Cat.numb.		Pack qty.	Page
872.15060		12	525
872.15080		8	525
872.20080		8	525
872.AE04040		10/60	525
872.AE06040		10/40	525
872.AE06060		10/40	525
872.AE08060		10/30	525
872.AE10060		8/16	525
872.AE10080		8/16	525
872.AE15060		1/6	525
872.AE15080		1/6	525
872.AE20080		1/4	525
872.AI04040		10/60	525
872.AI06040		10/60	525
872.AI06060		10/40	525
872.AI08060		10/30	525
872.AI10060		10/30	525
872.AI10080		10/20	525
872.AI15060		1/8	525
872.AI15080		1/6	525
872.AI20080		1/4	525
872.AP04040		10/120	525
872.AP06040		10/60	525
872.AP06060		10/40	525
872.AP08060		10/20	525
872.AP10060		1/20	525
872.AP10080		10/20	525
872.AP15060		1/12	525
872.AP15080		1/9	525
872.AP20080		1/6	525
872.CS40		100	529
872.CS60		72	529
872.GL02		10	526
872.GP40		20	526
872.GP60		20	526
872.GP80		20	526
872.GT40		20	526
872.GT60		10	526
872.GT80		10	526
872.GU040		20	526
872.GU060		20	526
872.GU080		20	526
872.GU100		20	526
872.GU150		20	526
872.GU200		20	526
872.GV02		10	526
872.MP01		20/80	529
872.MP02		1/20	529
872.PA02		1/20	528
872.PA080		20	528
872.PA100		15	528
872.PA150		15	528
872.PA200		10	528
872.PB02		1/30	527
872.PB04		1/20	527
872.PB080		20	527
872.PB100		15	527
872.PB150		15	527
872.PB200		10	527
872.PC02		1/30	528
872.PC080		20	528
872.PC100		15	528

872

Cat.numb.	Pack qty.	Page
872.PC150	15	528
872.PC200	10	528
872.PD150	10	528
872.PD200	10	528
872.SA40	1/10	527
872.SA60	1/4	527
872.SC01	1/9	527
872.SC02	1/10	527
872.TA02	1/10	529
872.TB100	20	529
872.TB150	20	529
872.TC10060	10/120	529
872.TC10080	10/120	529
872.TE060	20	529
872.TE080	20	529
872.TE100	20	529
872.TF100	20	529
872.TF150	20	529
872.TF200	20	529
872.TT04040	20	526
872.TT06040	20	526
872.TT06060	20	526
872.TT08060	20	526
872.TT10060	20	526
872.TT10080	20	526
872.TT15060	20	526
872.TT15080	20	526
872.TT20080	20	526

874

Cat.numb.	Pack qty.	Page
874.0040	24	530
874.0060	20	530
874.0080	16	530
874.0240	20	530
874.0260	14	530
874.0280	12	530
874.2530	58	530
874.2540	48	530
874.2560	34	530
874.2580	28	530
874.4030	38	530
874.4040	30	530
874.4060	22	530
874.4080	36	530
874.6040	40	530
874.6060	32	530
874.6080	24	530
874.8040	32	530
874.8060	24	530
874.8080	16	530
874.R0040	24	530
874.R0060	20	530
874.R0080	16	530
874.R0240	20	530
874.R0260	14	530
874.R0280	12	530
874.R2530	58	530
874.R2540	48	530
874.R2560	34	530

874

Cat.numb.	Pack qty.	Page
874.R2580	28	530
874.R4030	38	530
874.R4040	30	530
874.R4060	22	530
874.R4080	36	530
874.R6040	40	530
874.R6060	32	530
874.R6080	24	530
874.R8040	32	530
874.R8060	24	530
874.R8080	16	530

875

Cat.numb.	Pack qty.	Page
875.4201	500	356
875.4301	12/60	356
875.4303	6/300	357
875.4410	1/170	357
875.4411	1/120	357
875.4411P	90	357
875.4412	1/70	357
875.4413	1/44	357
875.4414	1/40	357
875.4415	1/24	357
875.4416	1/20	357
875.4417	1/12	357
875.4490	25/200	358
875.4491	25/200	358
875.4500	1/120	358
875.4501	50/600	356
875.4502	40/480	356
875.4510	5/100	358
875.4511	5/160	358
875.4512	5/140	358
875.4513	5/80	358
875.4514	5/60	358
875.4515	2/40	358
875.4516	2/30	358
875.4517	2/24	358
875.4603	120	357
875.4610	5/100	359
875.4611	5/160	359
875.4612	5/140	359
875.4613	5/80	359
875.4614	5/60	359
875.4615	2/40	359
875.4616	2/30	359
875.4617	2/24	359

876

Cat.numb.	Pack qty.	Page
876.1207AD	160	510
876.1212AD	90	510
876.1612AD	70	510
876.2010	80	511
876.2010G	80	511
876.2015	50	511
876.2015AV	50	511

876

Cat.numb.	Pack qty.	Page
876.2015G	50	511
876.3015	60	511
876.3015AV	60	511
876.3015G	60	511
876.4010	72	511
876.4010G	72	511
876.4015	48	511
876.4015AV	48	511
876.4015G	48	511
876.4020	36	511
876.4020AV	36	511
876.4020G	36	511
876.4021	36	511
876.4021G	36	511
876.6020	32	511
876.6020AV	32	511
876.6020G	32	511
876.AE2010	30	512
876.AE2010G	30	512
876.AE2015	30	512
876.AE2015G	30	512
876.AE3015	30	512
876.AE3015G	30	512
876.AE4010	30	512
876.AE4010G	30	512
876.AE4015	30	512
876.AE4015G	30	512
876.AE4020	30	512
876.AE4020G	30	512
876.AE6020	30	512
876.AE6020G	30	512
876.AI2010	30	512
876.AI2010G	30	512
876.AI2015	30	512
876.AI2015G	30	512
876.AI3015	30	512
876.AI3015G	30	512
876.AI4010	30	512
876.AI4010G	30	512
876.AI4015	30	512
876.AI4015G	30	512
876.AI4020	30	512
876.AI4020G	30	512
876.AI6020	30	512
876.AI6020G	30	512
876.AL2010	30	513
876.AL2010G	30	513
876.AL2015	30	513
876.AL2015G	30	513
876.AL3015	30	513
876.AL3015G	30	513
876.AL4010	6/30	513
876.AL4010G	6/30	513
876.AL4015	6/30	513
876.AL4015G	6/30	513
876.AL4020	6/30	513
876.AL4020G	6/30	513
876.AL6020	6/30	513
876.AL6020G	6/30	513
876.AP2010	30	512
876.AP2010G	30	512
876.AP2015	30	512

876

Cat.numb.	Pack qty.	Page
876.AP2015G	30	512
876.AP3015	30	512
876.AP3015G	30	512
876.AP4010	30	512
876.AP4010G	30	512
876.AP4015	30	512
876.AP4015G	30	512
876.AP4020	30	512
876.AP4020G	30	512
876.AP6020	30	512
876.AP6020G	30	512
876.AT2010	30	513
876.AT2010G	30	513
876.AT2015	30	513
876.AT2015G	30	513
876.AT3015	30	513
876.AT3015G	30	513
876.AT4010	30	513
876.AT4010G	30	513
876.AT4015	30	513
876.AT4015G	30	513
876.AT4020	30	513
876.AT4020G	30	513
876.AT6020	30	513
876.AT6020G	30	513
876.GT2010	30	514
876.GT2010G	30	514
876.GT2015	30	514
876.GT2015G	30	514
876.GT3015	30	514
876.GT3015G	30	514
876.GT4010	30	514
876.GT4010G	30	514
876.GT4015	30	514
876.GT4015G	30	514
876.GT4020	30	514
876.GT4020G	30	514
876.GT6020	30	514
876.GT6020G	30	514
876.GU2010	30	514
876.GU2010G	30	514
876.GU2015	30	514
876.GU2015G	30	514
876.GU3015	30	514
876.GU3015G	30	514
876.GU4010	30	514
876.GU4010G	30	514
876.GU4015	30	514
876.GU4015G	30	514
876.GU4020	30	514
876.GU4020G	30	514
876.GU6020	30	514
876.GU6020G	30	514
876.PA5530	10	515
876.PA5530G	10	515
876.PA6040	10	515
876.PA6040G	10	515
876.PA6050	10	515
876.PA6050G	10	515
876.PA8040	10	515
876.PA8040G	10	515
876.PA8050	10	515

● = IMQ or other quality marks ✔ = new product ✦ = make to order

Index by product number

876		
Cat.numb.	Pack qty.	Page
876.PA8050G	10	515
876.PK04	100/1000	516
876.PK05	100/1000	524
876.PK06	100/1000	524
876.PK60	10	515
876.PK60G	10	515
876.PK80	10	515
876.PK80G	10	515
876.RT2010	30	514
876.RT2010G	30	514
876.RT2015	30	514
876.RT2015G	30	514
876.SA70	10	516
876.SA70G	10	516
876.TF20	30	514
876.TF30	30	514
876.TF40	30	514
876.TF60	30	514
876.TT2010	30	514
876.TT2010G	30	514
876.TT2015	30	514
876.TT2015G	30	514
876.TT3015	30	514
876.TT3015G	30	514
876.TT4010	30	514
876.TT4010G	30	514
876.TT4015	30	514
876.TT4015G	30	514
876.TT4020	30	514
876.TT4020G	30	514
876.TT6020	30	514
876.TT6020G	30	514

879		
Cat.numb.	Pack qty.	Page
879.0007	20	517
879.0007A	20	517
879.0007G	20	517
879.0007M	20	517
879.0080	20	517
879.0080A	20	517
879.0080M	20	517
879.0120	20	517
879.0120A	20	517
879.0120M	20	517
879.AE0080	10	518
879.AE0080A	10	518
879.AE0080M	10	518
879.AE0120	10	518
879.AE0120A	10	518
879.AE0120M	10	518
879.AI0080	10	518
879.AI0080A	10	518
879.AI0080M	10	518
879.AI0120	10	518
879.AI0120A	10	518
879.AI0120M	10	518
879.AP0080	10	518
879.AP0080A	10	518
879.AP0080M	10	518

879		
Cat.numb.	Pack qty.	Page
879.AV0120	10	518
879.AV0120A	10	518
879.AV0120M	10	518
879.CC0080	10	519
879.CC0080A	10	519
879.CC0080M	10	519
879.CC0120	10	519
879.CC0120A	10	519
879.CC0120M	10	519
879.CC0121	10	519
879.CC0121A	10	519
879.CC0121M	10	519
879.CC0122	10	519
879.CC0122A	10	519
879.CC0122M	10	519
879.CP80	20/200	520
879.GM0080	10	518
879.GM0080A	10	518
879.GM0080M	10	518
879.GM0120	10	518
879.GM0120A	10	518
879.GM0120M	10	518
879.GS0080	10	518
879.GS0080A	10	518
879.GS0080M	10	518
879.GS0120	10	518
879.GS0120A	10	518
879.GS0120M	10	518
879.GT0007	10	521
879.GT0007A	10	521
879.GT0007G	10	521
879.GT0007M	10	521
879.GT0080	10	518
879.GT0080A	10	518
879.GT0080M	10	518
879.GT0120	10	518
879.GT0120A	10	518
879.GT0120M	10	518
879.GU0080	10	518
879.GU0080A	10	518
879.GU0080M	10	518
879.GU0120	10	518
879.GU0120A	10	518
879.GU0120M	10	518
879.PA6050	5	521
879.PA6050A	5	521
879.PA6050M	5	521
879.PA6051	5	521
879.PA6051A	5	521
879.PA6051M	5	521
879.PA8040	5	522
879.PA8040A	5	522
879.PA8040M	5	522
879.PA8050	5	522
879.PA8050A	5	522
879.PA8050M	5	522
879.PA8051	5	522
879.PA8051A	5	522
879.PA8051M	5	522
879.PA8450	5	522
879.PA8450A	5	522
879.PA8450M	5	522

879		
Cat.numb.	Pack qty.	Page
879.PA8451	5	522
879.PA8451A	5	522
879.PA8451M	5	522
879.PA9050	5	523
879.PA9050A	5	523
879.PA9050M	5	523
879.PA9051	5	523
879.PA9051A	5	523
879.PA9051M	5	523
879.PB8040	5	523
879.PB8040A	5	523
879.PB8040M	5	523
879.PB8050	5	523
879.PB8050A	5	523
879.PB8050M	5	523
879.PD60	5/30	524
879.PD60A	5/30	524
879.PD60M	5/30	524
879.PD80	5/30	524
879.PD80A	5/30	524
879.PD80M	5/30	524
879.TE80	5	520
879.TE80A	5	520
879.TE80M	5	520
879.TF80	30	520
879.TM0080	5	519
879.TM0080A	5	519
879.TM0080M	5	519
879.TM0120	5	519
879.TM0120A	5	519
879.TM0120M	5	519
879.TT0080	10	519
879.TT0080A	10	519
879.TT0080M	10	519
879.TT0120	10	519
879.TT0120A	10	519
879.TT0120M	10	519

899		
Cat.numb.	Pack qty.	Page
899.AL2CE350VS	1	203
899.AL2CE370S	1	203
899.AL2CE395S	1	203
899.AL2CE450VS	1	203
899.AL2CE470S	1	203
899.AL2DE350V	1	202
899.AL2DE370	1	202
899.AL2DE395	1	202
899.AL2DE450V	1	202
899.AL2DE470	1	202
899.AL2PC	1	207
899.AL2PR350V	1	202
899.AL2PR370	1	202
899.AL2PR395	1	202
899.AL2PR450V	1	202
899.AL2PR470	1	202
899.AL5CE312S	1	205
899.AL5CE315S	1	205
899.AL5CE318S	1	205
899.AL5CE324S-18	1	205

899		
Cat.numb.	Pack qty.	Page
899.AL5CE395S	1	205
899.AL5CE412S	1	205
899.AL5CE415S	1	205
899.AL5CE415S-16	1	205
899.AL5CE418S-16	1	205
899.AL5CE495S	1	205
899.AL5DE312	1	204
899.AL5DE315	1	204
899.AL5DE318	1	204
899.AL5DE324-18	1	204
899.AL5DE395	1	204
899.AL5DE412	1	204
899.AL5DE415	1	204
899.AL5DE415-16	1	204
899.AL5DE418-16	1	204
899.AL5DE495	1	204
899.AL5PC	1	207
899.AL5PR312	1	204
899.AL5PR312S	1	205
899.AL5PR315	1	204
899.AL5PR315S	1	205
899.AL5PR318	1	204
899.AL5PR318S	1	205
899.AL5PR324-18	1	204
899.AL5PR324S-18	1	205
899.AL5PR395	1	204
899.AL5PR395S	1	205
899.AL5PR412	1	204
899.AL5PR412S	1	205
899.AL5PR415	1	204
899.AL5PR415-16	1	204
899.AL5PR415S	1	205
899.AL5PR415S-16	1	205
899.AL5PR418-16	1	204
899.AL5PR418S-16	1	205
899.AL5PR495	1	204
899.AL5PR495S	1	205
899.AL8CF324S	1	207
899.AL8CF330S	1	207
899.AL8CF424S	1	207
899.AL8CF430S	1	207
899.AL8DF324	1	206
899.AL8DF330	1	206
899.AL8DF424	1	206
899.AL8DF430	1	206
899.AL8PC	1	207
899.AL8PM324S	1	206
899.AL8PM330S	1	206
899.AL8PM424S	1	206
899.AL8PM430S	1	206
899.AS2AR350V	1	209
899.AS2AR370	1	209
899.AS2AR395	1	209
899.AS2AR450V	1	209
899.AS2AR470	1	209
899.AS2CE350V	1	209
899.AS2CE370	1	209
899.AS2CE395	1	209
899.AS2CE450V	1	209
899.AS2CE470	1	209
899.AS2DE350V	1	208
899.AS2DE370	1	208

● = IMQ or other quality marks ✔ = new product ✦ = make to order

899		
Cat.numb.	Pack qty.	Page
899.AS2DE395	1	208
899.AS2DE450V	1	208
899.AS2DE470	1	208
899.AS2PC	1	214
899.AS2PR350V	1	208
899.AS2PR370	1	208
899.AS2PR395	1	208
899.AS2PR450V	1	208
899.AS2PR470	1	208
899.AS5AR312	1	211
899.AS5AR315	1	211
899.AS5AR318	1	211
899.AS5AR324-18	1	211
899.AS5AR395	1	211
899.AS5AR412	1	211
899.AS5AR415	1	211
899.AS5AR415-16	1	211
899.AS5AR418-16	1	211
899.AS5AR495	1	211
899.AS5CE312	1	211
899.AS5CE315	1	211
899.AS5CE318	1	211
899.AS5CE324-18	1	211
899.AS5CE395	1	211
899.AS5CE412	1	211
899.AS5CE415	1	211
899.AS5CE415-16	1	211
899.AS5CE418-16	1	211
899.AS5CE495	1	211
899.AS5DE312	1	210
899.AS5DE315	1	210
899.AS5DE318	1	210
899.AS5DE324-18	1	210
899.AS5DE395	1	210
899.AS5DE412	1	210
899.AS5DE415	1	210
899.AS5DE415-16	1	210
899.AS5DE418-16	1	210
899.AS5DE495	1	210
899.AS5PC	1	214
899.AS5PR312	1	210
899.AS5PR315	1	210
899.AS5PR318	1	210
899.AS5PR324-18	1	210
899.AS5PR395	1	210
899.AS5PR412	1	210
899.AS5PR415	1	210
899.AS5PR415-16	1	210
899.AS5PR418-16	1	210
899.AS5PR495	1	210
899.AS8AM324	1	213
899.AS8AM330	1	213
899.AS8AM424	1	213
899.AS8AM430	1	213
899.AS8CF324	1	213
899.AS8CF330	1	213
899.AS8CF424	1	213
899.AS8CF430	1	213
899.AS8DF324	1	212
899.AS8DF330	1	212
899.AS8DF424	1	212
899.AS8DF430	1	212

899		
Cat.numb.	Pack qty.	Page
899.AS8PC	1	214
899.AS8PM324	1	212
899.AS8PM330	1	212
899.AS8PM424	1	212
899.AS8PM430	1	212
899.IN25086	1	215
899.IN25086F	1	215
899.IN25086M	1	215
899.IN25086RM	1	215
899.IN25087	1	215
899.IN25087F	1	215
899.IN25087M	1	215
899.IN25087RM	1	215
899.SD2A3NE01	1	216
899.SD2A3OE01	1	216
899.SD2A3OE03	1	216
899.SD2D3NE01	1	216
899.SD2D3OE01	1	216
899.SD2D3OE03	1	216
899.SD2G	1	216
899.SD2GM	1	216
899.SD2GMA	1	216
899.SD2LB	1	217
899.SD2P3NE01	1	216
899.SD2P3OE01	1	216
899.SD2P3OE03	1	216
899.SD2PC	1	217
899.SD2WAS	1	217

MP3		
Cat.numb.	Pack qty.	Page
MP36246		417
MP36247		417
MP36275		417
MP36276		417

SC9		
Cat.numb.	Pack qty.	Page
SC92062	20	458
SC92063	20	458
SC92064	1	458
SC92065	1	459
SC92066	1	459
SC92068	80	458
SC92070		458
SC92072	80	458
SC92074	80	458
SC92076		458
SC92078		458
SC92080	80	458
SC92082		458
SC92085	1	459
SC92086	1	459
SC92088	1	459
SC92089	1	459
SC92092	1	459
SC92094	1	459

SCM		
Cat.numb.	Pack qty.	Page
SCM3100B4W		192
SCM3100B5W		192
SCM3100B6W		192
SCM3100B7W		192
SCM3100B8W	1	192
SCM3100C4W		193
SCM3100C5W		193
SCM3100C6W	1	193
SCM3100C7W		193
SCM3100C8W	1	193
SCM3100P4W		192
SCM3100P5W		192
SCM3100P6W	1	192
SCM3100P7W		192
SCM3100P8W	1	192
SCM3100R4W		193
SCM3100R5W		193
SCM3100R6W	1	193
SCM3100R7W		193
SCM3100R8W	1	193
SCM3125B6W	1	187
SCM3125C6W	1	187
SCM3125P6W	1	186
SCM3125R6W	1	187
SCM316B4S	1/5	184
SCM316B4W	1/5	186
SCM316B6S	1/5	184
SCM316B6W	1/5	186
SCM316C4S	1/5	185
SCM316C4W	1/5	187
SCM316C6S	1/5	185
SCM316C6W	1/5	187
SCM316P4S	1/5	184
SCM316P4W	1/5	186
SCM316P6S	1/5	184
SCM316P6W	1/5	186
SCM316R4S	1/5	185
SCM316R4W	1/5	187
SCM316R6S	1/5	185
SCM316R6W	1/5	187
SCM320B4S	1/5	188
SCM320B4W	1/5	190
SCM320B5S	1/5	188
SCM320B5W	1/5	190
SCM320B6S	1/5	188
SCM320B6W	1/5	190
SCM320B7S	1/5	188
SCM320B7W	1/5	190
SCM320C4S	1/5	189
SCM320C4W	1/5	191
SCM320C5S	1/5	189
SCM320C5W	1/5	191
SCM320C6S	1/5	189
SCM320C6W	1/5	191
SCM320C7S		189
SCM320C7W	1/5	191
SCM320MI4W	1/6	198
SCM320MI4W-C	1/6	199
SCM320MI4W-NB	1/6	197
SCM320MI6W	1/6	198
SCM320MI6W-C	1/6	199
SCM320MI6W-NB	1/6	197

SCM		
Cat.numb.	Pack qty.	Page
SCM320MI7W	1/6	198
SCM320MI7W-C	1/6	199
SCM320MI7W-NB	1/6	197
SCM320P4S	1/5	188
SCM320P4W	1/5	190
SCM320P5S	1/5	188
SCM320P5W	1/5	190
SCM320P6S	1/5	188
SCM320P6W	1/5	190
SCM320P7S	1/5	188
SCM320P7W	1/5	190
SCM320R4S	1/5	189
SCM320R4W	1/5	191
SCM320R5S	1/5	189
SCM320R5W	1/5	191
SCM320R6S	1/5	189
SCM320R6W	1/5	191
SCM320R7S		189
SCM320R7W	1/5	191
SCM330B4S	1/5	188
SCM330B4W	1/5	190
SCM330B6S	1/5	188
SCM330B6W	1/5	190
SCM330B7S		188
SCM330B7W	1/5	190
SCM330B8S	1/5	188
SCM330B8W	1/5	190
SCM330C4S	1/5	189
SCM330C4W	1/5	191
SCM330C6S	1/5	189
SCM330C6W	1/5	191
SCM330C7S	1/5	189
SCM330C7W	1/5	191
SCM330C8S	1	189
SCM330C8W	1	191
SCM330MI4W	1/6	198
SCM330MI4W-C	1/6	199
SCM330MI4W-NB	1/6	197
SCM330MI6W	1/6	198
SCM330MI6W-C	1/6	199
SCM330MI6W-NB	1/6	197
SCM330MI7W	1/6	198
SCM330MI7W-C	1/6	199
SCM330MI7W-NB	1/6	197
SCM330P4S	1/5	188
SCM330P4W	1/5	190
SCM330P6S	1/5	188
SCM330P6W	1/5	190
SCM330P7S	1/5	188
SCM330P7W	1/5	190
SCM330P8S	1/5	188
SCM330P8W	1/5	190
SCM330R4S	1/5	189
SCM330R4W	1/5	191
SCM330R6S	1/5	189
SCM330R6W	1/5	191
SCM330R7S		189
SCM330R7W	1/5	191
SCM330R8S	1/5	189
SCM330R8W	1/5	191
SCM332B4W	1/5	186
SCM332B6S	1/5	184

● = IMQ or other quality marks ✔ = new product ✦ = make to order

Index by product number

SCM			
Cat.numb.		Pack qty.	Page
SCM332B6W		1/5	186
SCM332C4S		1/5	185
SCM332C4W		1/5	187
SCM332C6S		1/5	185
SCM332C6W		1/5	187
SCM332P4S		1/5	184
SCM332P4W		1/5	186
SCM332P6S		1/5	184
SCM332P6W		1/5	186
SCM332R4S		1/5	185
SCM332R4W		1/5	187
SCM332R6S		1/5	185
SCM332R6W		1/5	187
SCM360B3W		1	192
SCM360B4W		1	192
SCM360B5W		1	192
SCM360B6W		1	192
SCM360B7W			192
SCM360B8W	✔	1	192
SCM360C3W		1	193
SCM360C4W		1	193
SCM360C5W		1	193
SCM360C6W		1	193
SCM360C7W		1	193
SCM360C8W	✔	1	193
SCM360MI6W	✔	1	198
SCM360MI6W-C	✔	1	199
SCM360MI6W-NB	✔	1	197
SCM360MI7W	✔	1	198
SCM360MI7W-C	✔	1	199
SCM360MI7W-NB	✔	1	197
SCM360P3W		1	192
SCM360P4W		1	192
SCM360P5W		1	192
SCM360P6W		1	192
SCM360P7W		1	192
SCM360P8W	✔	1	192
SCM360R3W		1	193
SCM360R4W		1	193
SCM360R5W		1	193
SCM360R6W		1	193
SCM360R7W		1	193
SCM360R8W	✔	1	193
SCM363B6W		1	186
SCM363C6W		1	187
SCM363P6W		1	186
SCM363R6W		1	187
SCM4100B12W		1	192
SCM4100B5W		1	192
SCM4100B6W		1/10	192
SCM4100B7W		1	192
SCM4100B9W		1	192
SCM4100C12W		1	193
SCM4100C5W		1	193
SCM4100C6W		1/6	193
SCM4100C7W		1	193
SCM4100C9W		1	193
SCM4100P12W		1	192
SCM4100P5W		1	192
SCM4100P6W		1/6	192
SCM4100P7W		1	192
SCM4100P9W		1	192

SCM			
Cat.numb.		Pack qty.	Page
SCM4100R12W		1	193
SCM4100R5W		1	193
SCM4100R6W		1/10	193
SCM4100R7W		1	193
SCM4100R9W		1	193
SCM4125B6W		1	187
SCM4125C6W		1	187
SCM4125P6W		1	186
SCM4125R6W		1	187
SCM416B6S		1/5	184
SCM416B6W		1/5	186
SCM416C6S		1/5	185
SCM416C6W		1/5	187
SCM416P6S		1/5	184
SCM416P6W		1/5	186
SCM416R6S		1/5	185
SCM416R6W		1/5	187
SCM420B12S		1/5	188
SCM420B12W		1/5	190
SCM420B5S			188
SCM420B5W		1/5	190
SCM420B6S		1/5	188
SCM420B6W		1/5	190
SCM420B7S		1/5	188
SCM420B7W		1/5	190
SCM420B9S		1/5	188
SCM420B9W		1/5	190
SCM420C12S		1/5	189
SCM420C12W		1/5	191
SCM420C5S		1/5	189
SCM420C5W		1/5	191
SCM420C6S		1/5	189
SCM420C6W		1/5	191
SCM420C7S		1/5	189
SCM420C7W		1/5	191
SCM420C9S		1/5	189
SCM420C9W		1/5	191
SCM420MI12W	✔	1/6	198
SCM420MI12W-C	✔	1/6	199
SCM420MI12W-NB	✔	1/6	197
SCM420MI5W	✔	1/6	198
SCM420MI5W-C	✔	1/6	199
SCM420MI5W-NB	✔	1/6	197
SCM420MI7W	✔	1/6	198
SCM420MI7W-C	✔	1/6	199
SCM420MI7W-NB	✔	1/6	197
SCM420MI9W	✔	1/6	198
SCM420MI9W-C	✔	1/6	199
SCM420MI9W-NB	✔	1/6	197
SCM420P12S		1/5	188
SCM420P12W		1/5	190
SCM420P5S		1/5	188
SCM420P5W		1/5	190
SCM420P6S		1/5	188
SCM420P6W		1/5	190
SCM420P7S		1/5	188
SCM420P7W		1/5	190
SCM420P9S		1/5	188
SCM420P9W		1/5	190
SCM420R12S		1/5	189
SCM420R12W		1/5	191
SCM420R5S		1/5	189

SCM			
Cat.numb.		Pack qty.	Page
SCM420R5W		1/5	191
SCM420R6S		1/5	189
SCM420R6W		1/5	191
SCM420R7S		1/5	189
SCM420R7W		1/5	191
SCM420R9S		1/5	189
SCM420R9W		1/5	191
SCM430B12S		1/5	188
SCM430B12W		1/5	190
SCM430B5S		1/5	188
SCM430B5W		1/5	190
SCM430B6S		1/5	188
SCM430B6W		1/5	190
SCM430B7S			188
SCM430B7W		1/5	190
SCM430B9S		1/5	188
SCM430B9W		1/5	190
SCM430C12S		1/5	189
SCM430C12W		1/5	191
SCM430C5S		1/5	189
SCM430C5W		1/5	191
SCM430C6S		1/5	189
SCM430C6W		1/5	191
SCM430C7S			189
SCM430C7W		1/5	191
SCM430C9S		1/5	189
SCM430C9W		1/5	191
SCM430MI12W	✔	1/6	198
SCM430MI12W-C	✔	1/6	199
SCM430MI12W-NB	✔	1/6	197
SCM430MI5W	✔	1/6	198
SCM430MI5W-C	✔	1/6	199
SCM430MI5W-NB	✔	1/6	197
SCM430MI7W	✔	1/6	198
SCM430MI7W-C	✔	1/6	199
SCM430MI7W-NB	✔	1/6	197
SCM430MI9W	✔	1/6	198
SCM430MI9W-C	✔	1/6	199
SCM430MI9W-NB	✔	1/6	197
SCM430P12S		1/5	188
SCM430P12W		1/5	190
SCM430P5S		1/5	188
SCM430P5W		1/5	190
SCM430P6S		1/5	188
SCM430P6W		1/5	190
SCM430P7S		1/5	188
SCM430P7W		1/5	190
SCM430P9S		1/5	188
SCM430P9W		1/5	190
SCM430R12S		1/5	189
SCM430R12W		1/5	191
SCM430R5S		1/5	189
SCM430R5W		1/5	191
SCM430R6S		1/5	189
SCM430R6W		1/5	191
SCM430R7S		1/5	189
SCM430R7W		1/5	191
SCM430R9S		1/5	189
SCM430R9W		1/5	191
SCM432B6S		1/5	184
SCM432B6W		1/5	186
SCM432C3W		1/5	187

SCM			
Cat.numb.		Pack qty.	Page
SCM432C6S		1/5	185
SCM432C6W		1/5	187
SCM432MI3W	✔	1/6	198
SCM432MI3W-C	✔	1/6	199
SCM432MI3W-NB	✔	1/6	197
SCM432P3W		1/5	186
SCM432P5W		1/5	186
SCM432P6S		1/5	184
SCM432P6W		1/5	186
SCM432R3S	✔	1/5	185
SCM432R3W	✔	1/5	187
SCM432R5W			187
SCM432R6S		1/5	185
SCM432R6W		1/5	187
SCM460B12W		1	192
SCM460B5W		1	192
SCM460B6W		1/10	192
SCM460B7W		1	192
SCM460B9W		1	192
SCM460C12W		1	193
SCM460C5W		1	193
SCM460C6W		1	193
SCM460C7W		1	193
SCM460C9W		1	193
SCM460MI5W	✔	1	198
SCM460MI5W-C	✔	1	199
SCM460MI5W-NB	✔	1	197
SCM460MI7W	✔	1	198
SCM460MI7W-C	✔	1	199
SCM460MI9W	✔	1	198
SCM460MI9W-C	✔	1	199
SCM460MI9W-NB	✔	1	197
SCM460P12W		1	192
SCM460P5W		1	192
SCM460P6W		1/6	192
SCM460P7W		1	192
SCM460P9W		1	192
SCM460R12W		1	193
SCM460R5W		1	193
SCM460R6W		1/10	193
SCM460R7W		1	193
SCM460R9W		1	193
SCM463B6W		1	186
SCM463C6W		1	187
SCM463P5W			186
SCM463P6W		1	186
SCM463R5W			187
SCM463R6W		1	187
SCM5100B5W		1	192
SCM5100B6W		1/10	192
SCM5100B7W		1	192
SCM5100B8W	✔	1	192
SCM5100B9W		1	192
SCM5100C5W		1	193
SCM5100C6W		1/6	193
SCM5100C7W		1	193
SCM5100C8W	✔	1	193
SCM5100C9W		1	193
SCM5100P5W		1	192
SCM5100P6W		1/6	192
SCM5100P7W		1	192
SCM5100P8W	✔	1	192

● = IMQ or other quality marks ✔ = new product ✦ = make to order

SCM			
Cat.numb.		Pack qty.	Page
SCM5100P9W		1	192
SCM5100R5W		1	193
SCM5100R6W		1/10	193
SCM5100R7W		1	193
SCM5100R8W	✔	1	193
SCM5100R9W		1	193
SCM5125B6W		1	187
SCM5125C6W		1	187
SCM5125P6W		1	186
SCM5125R6W		1	187
SCM516B6W		1/5	186
SCM516C6S		1/5	185
SCM516C6W		1/5	187
SCM516P6S		1/5	184
SCM516P6W		1/5	186
SCM516R6S		1/5	185
SCM516R6W		1/5	187
SCM520B5S			188
SCM520B5W			190
SCM520B6S		1/5	188
SCM520B6W		1/5	190
SCM520B7S			188
SCM520B7W		1/5	190
SCM520B9S		1/5	188
SCM520B9W		1/5	190
SCM520C5S		1/5	189
SCM520C5W		1/5	191
SCM520C6S		1/5	189
SCM520C6W		1/5	191
SCM520C7S		1/5	189
SCM520C7W		1/5	191
SCM520C9S		1	189
SCM520C9W		1/5	191
SCM520MI5W	✔	1/6	198
SCM520MI5W-C	✔	1/6	199
SCM520MI5W-NB	✔	1/6	197
SCM520MI7W	✔	1/6	198
SCM520MI7W-C	✔	1/6	199

SCM			
Cat.numb.		Pack qty.	Page
SCM520MI7W-NB	✔	1/6	197
SCM520MI9W	✔	1/6	198
SCM520MI9W-C	✔	1/6	199
SCM520MI9W-NB	✔	1/6	197
SCM520P5S		1/5	188
SCM520P5W		1/5	190
SCM520P6S		1/5	188
SCM520P6W		1/5	190
SCM520P7S		1/5	188
SCM520P7W		1/5	190
SCM520P9S		1/5	188
SCM520P9W		1/5	190
SCM520R5S		1/5	189
SCM520R5W		1/5	191
SCM520R6S		1/5	189
SCM520R6W		1/5	191
SCM520R7S		1/5	189
SCM520R7W		1/5	191
SCM520R9S		1/5	189
SCM520R9W		1/5	191
SCM530B5S		1/5	188
SCM530B5W			190
SCM530B6S		1/5	188
SCM530B6W		1/5	190
SCM530B7S		1/5	188
SCM530B7W		1/5	190
SCM530B9S			188
SCM530B9W		1/5	190
SCM530C5S			189
SCM530C5W		1/5	191
SCM530C6S		1/5	189
SCM530C6W		1/5	191
SCM530C7S		1/5	189
SCM530C7W		1/5	191
SCM530C9S		1/5	189
SCM530C9W		1/5	191
SCM530MI5W	✔	1/6	198
SCM530MI5W-C	✔	1/6	199

SCM			
Cat.numb.		Pack qty.	Page
SCM530MI5W-NB	✔	1/6	197
SCM530MI7W	✔	1/6	198
SCM530MI7W-C	✔	1/6	199
SCM530MI7W-NB	✔	1/6	197
SCM530MI9W	✔	1/6	198
SCM530MI9W-C	✔	1/6	199
SCM530MI9W-NB	✔	1/6	197
SCM530P5S		1/5	188
SCM530P5W		1/5	190
SCM530P6S		1/5	188
SCM530P6W		1/5	190
SCM530P7S		1/5	188
SCM530P7W		1/5	190
SCM530P9S		1/5	188
SCM530P9W		1/5	190
SCM530R5S			189
SCM530R5W		1/5	191
SCM530R6S		1/5	189
SCM530R6W		1/5	191
SCM530R7S		1/5	189
SCM530R7W		1/5	191
SCM530R9S		1/5	189
SCM530R9W		1/5	191
SCM532B6S		1/5	184
SCM532B6W		1/5	186
SCM532C6S		1/5	185
SCM532C6W		1/5	187
SCM532P6S		1/5	184
SCM532P6W		1/5	186
SCM532R6S		1/5	185
SCM532R6W		1/5	187
SCM560B5W		1	192
SCM560B6W		1/10	192
SCM560B7W		1	192
SCM560B9W		1	192
SCM560C5W		1	193
SCM560C6W		1/6	193
SCM560C7W		1	193

SCM			
Cat.numb.		Pack qty.	Page
SCM560C9W		1	193
SCM560MI5W	✔	1	198
SCM560MI5W-C	✔	1	199
SCM560MI5W-NB	✔	1	197
SCM560MI7W	✔	1/1	198
SCM560MI7W-C	✔	1	199
SCM560MI7W-NB	✔	1/1	197
SCM560MI9W	✔	1	198
SCM560MI9W-C	✔	1	199
SCM560MI9W-NB	✔	1	197
SCM560P5W		1	192
SCM560P6W		1/6	192
SCM560P7W		1	192
SCM560P9W		1	192
SCM560R5W		1	193
SCM560R6W		1/10	193
SCM560R7W		1	193
SCM560R9W		1	193
SCM563B6W		1	186
SCM563C6W		1	187
SCM563P6W		1	186
SCM563R6W		1	187
SCMBB01		1/12	195
SCMBB02		1/12	195
SCMBB03		1/6	195
SCMSAA12	✔	5	194
SCMSAB12	✔	5	194
SCMSAB34	✔	5	194
SCMSAC100	✔	5	194
SCMSAC125	✔	5	194
SCMSAC34	✔	5	194
SCMSAD125	✔	5	194

Definition of symbols

In order to give further product specification these symbols have been used throughout the catalogue. They are definied as follows:

= Coaxial TV socket ø 9.5mm

= 3 pole telephone socket

= RJ telephone socket

= Cat. 5E RJ45 socket

= Socket EN 60309 - 2P - 16A - 24V~

= Socket EN 60309 - 2P+E - 16A - 100/130V~ 4h

= Socket EN 60309 - 2P+E - 16A - 220/250V~ 6h

= Socket EN 60309 - 3P+E - 16A - 380/415V~ 6h

= Socket EN 60309 - 3P+N+E - 16A - 380/415V~ 6h

= Unwound cable power

= Wound cable power

= Screw terminals

= Insulation perforating terminals

= Spring terminals

= Mantle terminals

= Italian standard socket
2P 10A (P10) - Shuttered socket - CEI 23-50

= Italian standard socket
2P+E 10A (P11) - Shuttered socket - CEI 23-50

= Italian standard socket
2P+E 16A biv. (P17/11) - Shuttered socket - CEI 23-50

= Socket 2P+E 16A (P30) - Shuttered socket - CEI 23-50

= Pluristandard socket
2P+E 16A - Shuttered socket

= German standard socket
2P+E 16A- Shuttered socket

= French standard socket
2P+E 16A - Shuttered socket

= British standard socket
2P+E 13A - Shuttered socket - BS1363-2

= British standard socket
2P+E 15A - Shuttered socket - BS546

= Indian standard socket
2P+E 6/16A - Shuttered socket - IS 1293:1998

= Euro-american standard socket
2P+E 15A

= Argentinian standard socket
2P+E 10A - Unshuttered socket - IRAM 2071

= Argentinian standard socket
2P+E 10A - Unshuttered socket - IRAM 2071

= Argentinian standard socket
2P+E 20A - Unshuttered socket - IRAM 2071

= New Zealand standard socket
2P+E 10A - Unshuttered socket - AS/N25 3112

= Swiss standard socket
2P+E 10A - Unshuttered socket - SEV 1011:1998

= Brazilian standard socket
2P+E 10A - Unshuttered socket - ABNT NBR 14136:3003

The SCAME product range

SYSTEMS CATALOGUE

SCAME offers a wide range of products for the home environment, industry and tertiary sector, developed according to the most important international standards.
The range includes:
- electrical components for domestic use and similar items
- components and systems for electrical installations
- assembled equipment
- accessories and components for electrical plants

ATEX CATALOGUE

SCAME offers specific products for environments at risk of explosion and fire, developed according to the ATEX Directive and certified in compliance with the IECEx standard.
The range includes :
- interlocked sockets and plugs from 16 to 125 A
- junction boxes and control systems
- disconnectors in enclosure from 20 A to 63 A
- plastic and metal cable glands

ECOMOBILITY CATALOGUE

SCAME has been involved for many years now in the field of electric mobility, making connectors and charging stations intended for electric vehicles. The range includes:
- charging connectors
- charging panels for the home
- charging stations for public environments
- vehicle-charging station connecting cables
- systems for the management of charging systems

WIRING CATALOGUE

SCAME offers, for the domestic sector, a wide range of flush- and wall-mounted wiring accessories, developed in compliance with different national standards (British, German, Italian, etc). The range includes:
- Flush-mounted series with plastic plate
- Flush-mounted series with metal plate
- Wall-mounted series in airtight enclosure
- Wall-mounted series in metal enclosure
- Outdoor series with degree of protection

SCAME PARRE S.p.A.
MEMBER OF:

ANIE cesap CEI

Scame parre S.p.A. reserves the right to modify products illustrated in this catalogue without prior notice as part of its policy of constant product improvement and development.

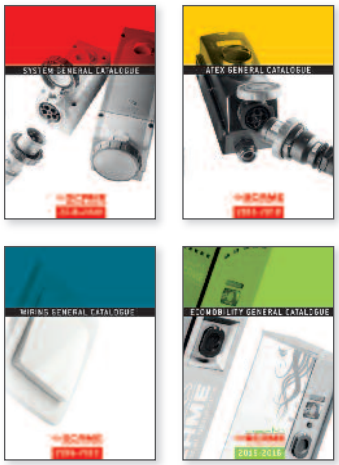

ZP01000-GB-1
8 001636 413846

Click&Go
www.scame.com/Catalogo.aspx

SCAME
electrical solutions

ScameOnLine
www.scame.com
export@scame.com

SCAME PARRE S.p.A.
VIA COSTA ERTA, 15
24020 PARRE (BG) ITALY
TEL. +39 035 705000
FAX +39 035 703122